TPC Benchmark™ C
Full Disclosure Report
for
IBM @server xSeries 370
using
Microsoft SQL Server 2000
and
Microsoft Windows 2000 Datacenter Server

TPC-C
Rev. 3.5 Upgrade to Rev. 5.0

Submitted for Review
April 10, 2001

First Edition - April 2001

THE INFORMATION CONTAINED IN THIS DOCUMENT IS DISTRIBUTED ON AN AS IS BASIS WITHOUT ANY WARRANTY EITHER EXPRESSED OR IMPLIED. The use of this information or the implementation of any of these techniques is the customer's responsibility and depends on the customer's ability to evaluate and integrate them into the customer's operational environment. While each item has been reviewed by IBM for accuracy in a specific situation, there is no guarantee that the same or similar results will be obtained elsewhere. Customers attempting to adapt these techniques to their own environment do so at their own risk.

In this document, any references made to an IBM licensed program are not intended to state or imply that only IBM's licensed program may be used; any functionally equivalent program may be used.

This publication was produced in the United States. IBM may not offer the products, services, or features discussed in this document in other countries, and the information is subject to change without notice. Consult your local IBM representative for information on products and services available in your area.

© Copyright International Business Machines Corporation 2001. All rights reserved.

Permission is hereby granted to reproduce this document in whole or in part, provided the copyright notice as printed above is set forth in full text on the title page of each item reproduced.

U.S. Government Users - Documentation related to restricted rights: Use, duplication, or disclosure is subject to restrictions set forth in GSA ADP Schedule Contract with IBM Corp.

Trademarks

IBM, Netfinity and ServeRAID are registered trademarks, and the e-business logo and xSeries are trademarks of International Business Machines Corporation.

The following terms used in this publication are trademarks of other companies as follows: TPC Benchmark, TPC-C and tpmC are trademark of Transaction Processing Performance Council; Intel, Pentium and Xeon are trademarks or registered trademarks of Intel Corporation; Microsoft, Windows 2000, and BenchCraft are trademarks or registered trademarks of Microsoft Corporation. Other company, product, or service names, which may be denoted by two asterisks (**), may be trademarks or service marks of others.

Notes

[1] MHz only measures microprocessor internal clock speed, not application performance. Many factors affect application performance.
[2] In the context of the TPC-C benchmark reported in this document, 1GB equals 1024*1024MB. The reason for calculating GB in this way is to maintain compatibility with the method Windows' logical disk manager uses to report storage.

IBM @server xSeries 370 with Microsoft SQL Server 2000

TPC-C Rev. 5.0
Upgrade from Rev. 3.5

Report Date: April 10, 2001
Original: March 23, 2001

Total System Cost	TPC-C Throughput	Price/Performance	Availability Date
$2,301,858	**121,319.23 tpmC**	**$18.97 / tpmC**	**May 31, 2001**

Processors	Database Manager	Operating System	Other Software	Number of Users
32 Intel(R) Pentium(R) III Xeon™ 900MHz 2MB L2 Cache	**Microsoft(R) SQL Server 2000**	**Microsoft Windows(R) 2000 Datacenter Server**	**Microsoft COM+ Microsoft Visual C++ 6.0**	**99,680**

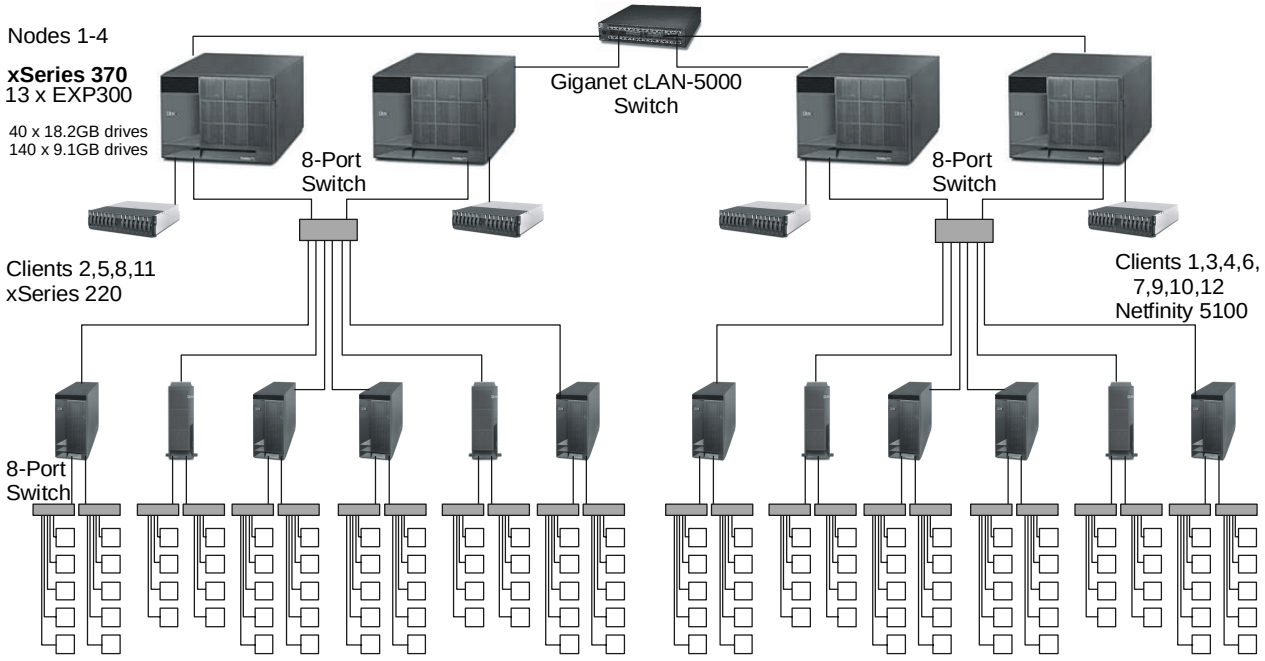

System Component	Qty	Each of 4 Server Nodes	Qty	Each of 8 Netfinity 5100 Clients:
Processors	**8**	**900MHz Pentium III Xeon**	**2**	**733MHz Pentium III**
Cache		**w/2MB L2 Cache**		**w/256KB L2 Cache**
Memory	**32**	**1GB ECC SDRAM**	**4**	**128MB**
Disk Controllers	**7**	**ServeRAID-4H Ultra160 SCSI Adapter**	**1**	**Ultra160 SCSI Onboard**
Disk Drives	**140**	**9.1GB (15000 rpm)**	**1**	**9.1GB (10000 rpm)**
	40	**18.2GB (15000 rpm)**		
	2	**9.1GB (10000 rpm)**		**Each of 4 xSeries 220 Clients:**
			2	**933MHz/256KB Pentium III**
Total Storage	**1**	**9.2TB (8.77TB online)**	**1**	**128MB ECC SDRAM**
Other			**2**	**256MB ECC SDRAM**
Tape Drive	**1**	**3502-R14 DLT Tape Library**	**1**	**Ultra160 SCSI Onboard**
		Giganet cLAN-1000 Host	**1**	**9.1GB (10000 rpm)**
Interconnect	**1**	**Adapter**		
		Giganet cLAN-5000 Switch		

@server xSeries 370 c/s with Microsoft SQL Server 2000

TPC-C Rev. 5.0
Upgrade from Rev. 3.5

Report Date: April 10, 2001
Original: March 23, 2001

Description	Order Number	Third-Party Brand	Third-Party Pricing	Unit Price	Qty	Ext. Price	3-Yr. Maint.*
Server Hardware							
xSeries 370 900MHz/2MB Pentium III Xeon*	8681-3RX	IBM	1	$19,114	4	$76,456	$9,980
900MHz/2MB L2 Cache Processor Upgrade	19K4637	IBM	1	6,599	28	184,772	0
8500R Memory Expansion Card	28L4454	IBM	1	625	4	2,500	0
8500 >4X Accelerator Filter	10K2335	IBM	1	1,249	4	4,996	0
1GB SDRAM RDIMM Memory Kit	33L3056	IBM	1	2,596	128	332,288	0
9.1GB 10K Ultra160 SCSI Drive	37L7204	IBM	1	299	8	2,392	0
ServeRAID-4H Ultra160 SCSI Adapter	37L6889	IBM	1	2,439	28	68,292	0
Ultra2 SCSI 4m Cable	03K9311	IBM	1	105	104	10,920	0
10/100 Ethernet Server Adapter with IPSec	06P3601	IBM	1	99	4	396	0
E54 15" (13.8" Viewable) Color Monitor*	6331N2N	IBM	1	173	4	692	360
3502-R14 DLT Tape Autoloader*	3502R14	IBM	1	13,779	1	13,779	1,450
IBM Smart-UPS Model 5000RMB	37L6861	IBM	1	3,299	4	13,196	0
Netfinity Rack*	9306900	IBM	1	1,725	6	10,350	1,800
Side Panel Kit	94G6669	IBM	1	195	1	195	0
Hardware installation and prep fees		IBM	1			21,180	0
Giganet cLAN-1000 Host Adapter (incl. 10%)	cLAN-1000	Giganet	3	795	6	4,770	45,000
Giganet cLAN5000 8-Port Switch (incl. 10%)	cLAN5000	Giganet	3	6,250	3	18,750	incl. above
Giganet cLAN-A1011 10M Cable (incl. 10%)	cLAN-A1011	Giganet	3	135	6	810	incl. above
Storage Hardware							
Netfinity EXP300 Rack Storage Enclosure*	35311RU	IBM	1	3,179	52	165,308	10,400
9.1GB 15K Ultra160 SCSI Drive	19K0655	IBM	1	601	560	336,560	0
18.2GB 15K Ultra160 SCSI Drive	19K0656	IBM	1	789	160	126,240	0
					Subtotal	$1,394,842	$68,990
Server Software							
Datacenter OS Preload Kit/Ship Group/Warr.	22P4745	IBM	1			$421,200	0
Microsoft SQL Server 2000	11K7641	Microsoft	2	16,541	32	539,312	0
3-Year Maintenance for Software		Microsoft	2	2,095	12		$25,140
					Subtotal	$950,512	$25,140
Client Hardware							
Netfinity 5100 / 733MHz/256KB Pentium III*	8658-2RY	IBM	1	2,052	8	$16,416	$11,960
733MHz/256KB Pentium III Upgrade	00N7943	IBM	1	399	8	3,192	0
128MB DIMMs	33L3123	IBM	1	185	24	4,440	0
xSeries 220 / 933MHz/256KB Pentium III*	8645-41X	IBM	1	1,593	4	6,372	5,980
933MHz/256KB Pentium III Upgrade	10K3819	IBM	1	999	4	3,996	0
256MB ECC SDRAM RDIMM	33L3144	IBM	1	365	8	2,920	0
9.1GB 10K Ultra160 SCSI Drive	37L7204	IBM	1	299	12	3,588	0
Intel Pro/100+ Dual-Port Ethernet Adapter**	8472	Intel	1	219	12	2,628	0
E54 15" (13.8" Viewable) Color Monitor*	6331N2N	IBM	1	173	12	2,076	1,080
					Subtotal	$45,628	$19,020
Client Software							
Microsoft Windows 2000 Server with COM+	C11-00821	Microsoft	2	738	12	8,856	incl. above
Microsoft Visual C++ Professional 6.0	048-00317	Microsoft	2	549	1	549	incl. above
					Subtotal	$9,405	$0
User Connectivity							
8-Port 10/100 Nway Fast Ethernet Switch (+!0%)	NX-DSS8		4	25	4	100	0
					Subtotal	$100	$0
					Total	$2,400,487	$113,150
Large volume discount; prices will vary if purchased individually.					**Discount**	(211,779)	$0
					Grand Total	$2,188,708	$113,150

Notes: * The standard 3-year warranty on IBM hardware has been upgraded to 7x24, 4-hour response. ** Five-year warranty. *** 10% or minimum 2 spares are added in place of on-site service (products have a 5-year return-to-vendor warranty)

Pricing: 1 - IBM; 2 - Microsoft; 3 - Giganet; 4 - Software House International

Audited by Brad Askins of InfoSizing, Inc.

Five-Year Cost of Ownership:	$2,301,858
tpmC Rating:	121,319.23
$ / tpmC:	$18.97

Prices used in TPC benchmarks reflect the actual prices a customer would pay for a one-time purchase of the stated components. Individually negotiated discounts are not permitted. Special prices based on assumptions about past or future purchases are not permitted. All discounts reflect standard pricing policies for the listed components. For complete details, see the pricing sections of the TPC benchmark specification. If you find that stated prices are not available according to these terms, please inform the TPC at pricing@tpc.org. Thank you.

Numerical Quantities Summary

MQTh, Computed Maximum Qualified Throughput: % throughput difference, reported and reproducibility runs:	121,319.23 tpmC 0.7 %

Response Times (in seconds)	90%	Average	Maximum
New-Order	1.30	0.78	24.82
Payment	1.30	0.77	26.10
Delivery (Interactive)	0.83	0.33	2.19
Stock-Level	1.10	0.57	6.11
Order Status	1.03	0.51	6.42
Delivery (Deferred)	0.46	0.34	6.14
Menu	0.85	0.34	3.88

Transaction Mix (in percent of total transactions)	Total Occurrences	Percent
New-Order	3,639,577	44.83
Payment	3,493,410	43.03
Delivery	328,099	4.04
Stock Level	328,584	4.05
Order Status	329,461	4.06

Emulation Delay (in seconds)		Response Time	Menu
New-Order		0.1	0.1
Payment		0.1	0.1
Order-Status		0.1	0.1
Delivery		0.1	0.1
Stock-Level		0.1	0.1

Keying/Think Times (in seconds)	Minimum	Average	Maximum
New-Order	18.00 / 0.00	18.01 / 12.04	18.07 / 120.51
Payment	3.00 / 0.00	3.01 / 12.05	3.07 / 120.51
Delivery	2.00 / 0.00	2.01 / 5.06	2.08 / 50.51
Stock Level	2.00 / 0.00	2.01 / 5.06	2.05 / 50.50
Order Status	2.00 / 0.00	2.01 10.07	2.05 / 100.51

Test Duration	
Ramp-up time	1 hour 6 minutes 21 seconds
Measurement interval	30 minutes
Number of transactions (all types) completed in measurement interval	8,447,190
Ramp-down time	3 minutes 1 seconds
Number of checkpoints in measurement interval	1
Checkpoint interval	30 minutes

Table of Contents

Preface 10
General Items 14
Application Code and Definition Statements 14
Benchmark Sponsor 14
Parameter Settings 14
Configuration Diagrams 14
Measured Configuration 15
Priced Configuration 16
Clause 1: Logical Database Design Related Items 17
Table Definitions 17
Physical Organization of the Database 17
Insert and Delete Operations 17
Horizontal or Vertical Partitioning 17
Replication 17
Table Attributes 17
Clause 2: Transaction and Terminal Profiles Related Items 18
Random Number Generation 18
Screen Layout 18
Terminal Verification 18
Intelligent Terminals 18
Transaction Profiles 18
Deferred Delivery Mechanism 19
Clause 3: Transaction and System Properties Related Items 20
Atomicity Requirements 20
Completed Transactions 20
Aborted Transactions 20
Consistency Requirements 20
Isolation Requirements 21
Loss of Data Test 21
Combined Loss of Log and Loss of System Test (Instantaneous Interruption and Loss of Memory) 22
Loss of Interconnect 22
Clause 4: Scaling and Database Population Related Items 23
Cardinality of Tables 23
Distribution of Tables and Logs 23
Database Model Implemented 24
Partitions/Replications Mapping 25
60-Day Space Requirement 25
Clause 5: Performance Metrics and Response Time Related Items 26
Measured tpmC 26
Response Times 26
Keying/Think Times 26
Response Time Frequency Distribution Curves 27
Work Performed during Steady State 31
Transaction Flow 31
Checkpoints 31
Reproducibility Methodology 31
Measurement Interval 31
Transaction Mix 32
Percentage of Total Mix 32
Clause 6: SUT, Driver and Communication Definition Related Items 34
Description of RTE 34
Emulated Components 34

Benchmarked and Targeted System Configuration Diagrams 34
Network Configuration 34
Network Bandwidth 35
Operator Intervention 35
Clause 7: Pricing Related Items 36
Hardware and Software Components 36
Availability Date 36
Measured tpmC 36
Country-Specific Pricing 36
Usage Pricing 36
System Pricing 37
Clause 9: Audit Related Items 38
Auditor 38
Availability of the Full Disclosure Report 38
Attestation letter 39
Appendix A: Source Code 41
Web Client Source Code 41
dlldata.c 41
error.h 41
install.c 43
install.h 52
install.rc 52
install_com.cpp 55
install_resource.h 59
isapi_dll_resource.h 59
license.txt 59
methods.h 61
Readregistry.cpp 63
ReadRegistry.h 64
ReadWHouse.cpp 64
ReadWHouse.h 67
rtetime.h 67
SetAuditTime.cpp 68
spinlock.h 70
tpcc.cpp 71
tpc.def 96
tpcc.h 96
tpcc.rc 98
tpcc_com.cpp 99
tpcc_com.h 101
tpcc_com_all.cpp 103
tpcc_com_all.def 108
tpcc_com_all.h 108
tpcc_com_all.idl 109
tpcc_com_all.rc 110
tpcc_com_all.rgs 111
tpcc_com_all_i.c 111
tpcc_com_no.rgs 112
tpcc_com_os.rgs 112
tpcc_com_pay.rgs 112
tpcc_com_ps.def 113
tpcc_com_ps.h 113
tpcc_com_ps.idl 115
tpcc_com_ps_i.c 115
tpcc_com_ps_p.c 116

tpcc_com_rem.cpp . . . 127
tpcc_com_rem.h . . . 128
tpcc_com_remote.cpp . . . 130
tpcc_com_remote.def . . . 135
tpcc_com_remote.h . . . 135
tpcc_com_remote.idl . . . 135
tpcc_com_remote.rc . . . 136
tpcc_com_remote. rgs . . . 137
tpcc_com_remote_i.c . . . 137
tpcc_com_remote_Methods.h . . . 137
tpcc_com_remote_ps.def . . . 139
tpcc_com_remote_ps.h . . . 139
tpcc_com_remote_ps.idl . . . 141
tpcc_com_remote_ps_i.c . . . 141
tpcc_com_remote_ps_p.c . . . 142
tpcc_com_remote_resource.h . . . 153
tpcc_com_sl.rgs . . . 153
tpcc_odbc.cpp . . . 153
tpcc_odbc.h . . . 162
trans.h . . . 164
txn_base.h . . . 166
txnlog.h . . . 166
Stored Procedures . . . 169
delivery.sql . . . 169
neword.sql . . . 170
ordstat.sql . . . 173
payment.sql . . . 174
stocklev.sql . . . 176
Appendix B: Database Design . . . 178
Database Build . . . 178
4x2492 . . . 178
add_constraints_t1.sql . . . 178
add_constraints_t2.sql . . . 178
add_constraints_t3.sql . . . 179
add_constraints_t4.sql . . . 179
add_views1.sql . . . 180
add_views2.sql . . . 181
add_views3.sql . . . 181
add_views4.sql . . . 183
item_iot1.sql . . . 183
item_iot2.sql . . . 184
item_iot3.sql . . . 184
item_iot4.sql . . . 184
backup.sql . . . 185
backupdev.sql . . . 185
createdb.sql . . . 185
dbopt1.sql . . . 186
dbopt2.sql . . . 186
idxcuscl.sql . . . 187
idxcusnc.sql . . . 187
idxdiscl.sql . . . 187
idxitmcl.sql . . . 188
idxnodcl.sql . . . 188
idxodlcl.sql . . . 188
idxordcl.sql . . . 188

idxordnc.sql . . . 189
idxstkcl.sql . . . 189
idxwarcl.sql . . . 189
tables.sql . . . 189
restore.sql . . . 192
removedb.sql . . . 192
version.sql . . . 192
Load Source Code . . . 193
getargs.c . . . 193
random.c . . . 195
strings.c . . . 196
time.c . . . 199
tpcc.h . . . 199
tpccldr.c . . . 200
tpccldr.mak . . . 224
Appendix C: Tunable Parameters . . . 229
Database Startup Parameters . . . 229
Database Information . . . 229
Software Update . . . 230
Microsoft Windows 2000 Datacenter Configuration . . . 230
boot.ini . . . 230
Enabling AWE . . . 230
Enabling VIA . . . 230
System Information Report for Server Nodes . . . 230
Client Configuration . . . 256
Transaction Monitor: COM+ Settings on Clients . . . 256
Windows Registry Editor Version 5.00 . . . 256
System Information Report for Clients . . . 258
RTE Input Parameters . . . 297
Appendix D: 60-Day Space . . . 330
Appendix E: Third-Party Quotations . . . 331

Preface

The TPC Benchmark™ C was developed by the Transaction Processing Performance Council (TPC). The TPC was founded to define transaction processing benchmarks and to disseminate objective, verifiable performance data to the industry. This full disclosure report is based on the TPC Benchmark C Standard Specification Version 3.5, released October 25, 1999.

The TPC describes this benchmark in Clause 0.1 of the specification as follows:

TPC Benchmark C is an On Line Transaction Processing (OLTP) workload. It is a mixture of read-only and update-intensive transactions that simulate the activities found in complex OLTP application environments. It does so by exercising a breadth of system components associated with environments, which are characterized by:

- The simultaneous execution of multiple transaction types that span a breadth of complexity
- On-line and deferred transaction execution modes
- Multiple on-line terminal sessions
- Moderate system and application execution time
- Significant disk input/output
- Transaction integrity (ACID properties)
- Non-uniform distribution of data access through primary and secondary keys
- Databases consisting of many tables with a wide variety of sizes, attributes and relationships
- Contention on data access and update

The performance metric reported by TPC-C is a “business throughput” measuring the number of orders processed per minute. Multiple transactions are used to simulate the business activity of processing an order, and each transaction is subject to a response time constraint. The performance metric for this benchmark is expressed in transactions-per-minute-C (tpmC). To be compliant with the TPC-C standard, all references to tpmC results must include the tpmC rate, the associated price-per-tpmC, and the availability date of the priced configuration.

Despite the fact that this benchmark offers a rich environment that emulates many OLTP applications, this benchmark does not reflect the entire range of OLTP requirements. In addition, the extent to which a customer can achieve the results reported by a vendor is highly dependent on how closely TPC-C approximates the customer application. The relative performance of systems derived from this benchmark does not necessarily hold for other workloads or environments. Extrapolations to any other environment are not recommended.

Benchmark results are highly dependent upon workload, specific application requirements, and systems design and implementation. Relative system performance will vary as a result of these and other factors. Therefore, TPC-C should not be used as a substitute for a specific customer application benchmarking when critical capacity planning and/or product evaluation decisions are contemplated.

General Items

Benchmark Sponsor

A statement identifying the benchmark sponsor(s) and other participating companies must be provided.

This benchmark was sponsored by International Business Machines Corporation.

Application Code and Definition Statements

The application program (as defined in Clause 2.1.7) must be disclosed. This includes, but is not limited to, the code implementing the five transactions and the terminal input and output functions.

Appendix A contains all source code implemented in this benchmark.

Parameter Settings

Settings must be provided for all customer-tunable parameters and options that have been changed from the defaults found in actual products, including but not limited to:

- *Database tuning options*
- *Recovery/commit options*
- *Consistency/locking options*
- *Operating system and application configuration parameters.*
- *Compilation and linkage options and run-time optimizations used to create/install applications, OS, and/or databases.*

This requirement can be satisfied by providing a full list of all parameters and options.

Appendix C contains the tunable parameters for the database, the operating system, and the transaction monitor.

Configuration Diagrams

Diagrams of both measured and priced configurations must be provided, accompanied by a description of the differences.

The configuration diagrams for the measured and priced systems are provided on the following pages.

Measured Configuration

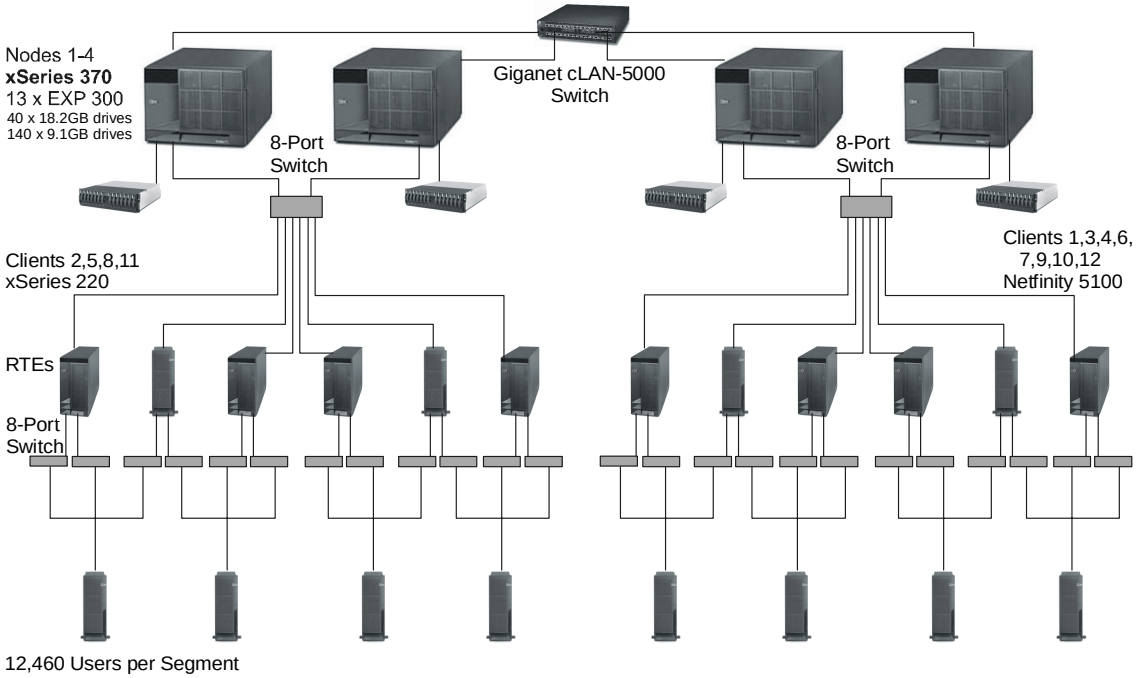

Priced Configuration

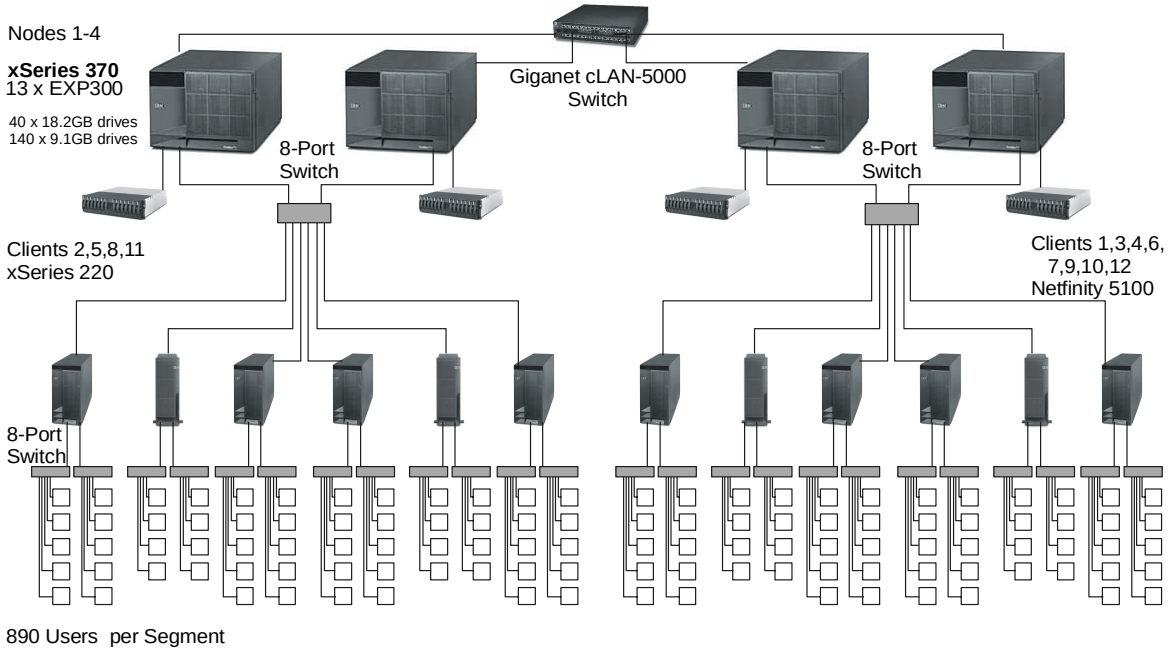

Clause 1: Logical Database Design Related Items

Table Definitions

Listings must be provided for all table definition statements and all other statements used to set up the database. (8.1.2.1)

Appendix B contains the code used to define and load the database tables.

Physical Organization of the Database

The physical organization of tables and indexes within the database must be disclosed. (8.1.2.2)

Physical space was allocated to SQL Server 2000 on the server disks as detailed in Figure 4-2.

Insert and Delete Operations

It must be ascertained that insert and/or delete operations to any of the tables can occur concurrently with the TPC-C transaction mix. Furthermore, any restriction in the SUT database implementation that precludes inserts beyond the limits defined in Clause 1.4.11 must be disclosed. This includes the maximum number of rows that can be inserted and the maximum key value for these new rows. (8.1.2.3)

All insert and delete functions were fully operational during the running of the benchmark. The space required for an additional 5 percent of the initial table cardinality was allocated to SQL Server 2000 and priced as static space.

The insert and delete functions were verified by the auditor. In addition, the auditor verified that the primary key for each database table could be updated.

Horizontal or Vertical Partitioning

While there are few restrictions placed upon horizontal or vertical partitioning of tables and rows in the TPC-C benchmark (see Clause 1.6), any such partitioning must be disclosed. (8.1.2.4)

The database tables, with one exception, were partitioned across the server nodes using range partitioning. The warehouse ID was used as the partition key. The specifics of the distribution of database partitions across the physical media can be found in Table 4-2. The exception is the ITEM table, which was replicated across all database server nodes.

Replication

Replication tables, if used, must be disclosed (see Clause 1.4.6). (8.1.2.5)

The ITEM table was replicated across all database server nodes. Database triggers were used to ensure that updates to the ITEM table on one node were made to the ITEM table on the other nodes. Their consistency has been verified by the auditor.

Table Attributes

Additional and/or duplicated attributes in any table must be disclosed, along with a statement on the impact on performance (see Clause 1.4.7). (8.1.2.6)

No additional attributes were used in this benchmark.

Clause 2: Transaction and Terminal Profiles Related Items

Random Number Generation

The method of verification for the random number generation must be disclosed.

The seeds for each user were captured and verified by the auditor to be unique. In addition, the contents of the database were systematically searched and randomly sampled by the auditor for patterns that would indicate that the random number generator had effected any kind of discernible pattern; none was found.

Screen Layout

The actual layouts of the terminal input/out screens must be disclosed.

All screen layouts followed the TPC Benchmark C Standard Specification exactly. .

Terminal Verification

The method used to verify that the emulated terminals provide all the features described in Clause 2.2.2.4 must be explained. Although not specifically priced, the type and model of the terminals used must for the demonstration in 8.1.3.3 must be disclosed and commercially available (including supporting software and maintenance).

The auditor verified terminal features by direct experimentation. The benchmarked configuration uses Microsoft Internet Explorer 5.0 and HTML scripts as the terminal interface.

Intelligent Terminals

Any usage of presentation managers or intelligent terminals must be explained.

The terminals emulated in the priced configuration are IBM PC desktop computer systems. All processing of the input/output screens was handled by the Netfinity 5100 and xSeries 220 clients. The screen input/output was managed via HTML strings that comply with the HTML Version 2.0 specification. A listing of the code used to implement the intelligent terminals is provided in Appendix A. All data manipulation was handled by the xSeries 370 server.

Transaction Profiles

The percentage of home and remote order-lines in the New-Order transactions must be disclosed. (8.1.3.5)
The percentage of New-Order transactions that were rolled back as a result of an unused item number must be disclosed. (8.1.3.6)
The number of items per orders entered by New-Order transactions must be disclosed. (8.1.3.7)
The percentage of home and remote Payment transactions must be disclosed. (8.1.3.8)
The percentage of Payment and Order-Status transactions that used non-primary key (C_LAST) access to the database must be disclosed. (8.1.3.9)
The percentage of Delivery transactions that were skipped as a result of an insuffic ient number of rows in the NEW-ORDER table must be disclosed. (8.1.3.10)
The mix (i.e., percentages) of transaction types seen by the SUT must be disclosed. (8.1.3.11)

Table 2-1. Transaction Statistics

New Order	Value (%)
Home warehouse order lines	99.00
Remote warehouse order lines	1.00
Rolled back transactions	1.00
Average number of items per order	10.00
Payment	
Home warehouse payment transactions	85.00
Remote warehouse payment transactions	15.00
Non-Primary Key Access	
Payment transactions using C_LAST	60.01
Order-Status transactions using C_LAST	60.01
Delivery	
Delivery transactions skipped	0
Transaction Mix	
New-Order	44.83
Payment	43.03
Delivery	4.04
Stock Level	4.05
Order Status	4.06

Deferred Delivery Mechanism

The queuing mechanism used to defer execution of the Delivery transaction must be disclosed. (8.1.3.12)

The deferred delivery operation is queued by making an entry in an array within the application process (tpcc.dll) running on the client. Background threads within the application asynchronously process the queued delivery transactions.

The source code is listed in Appendix A.

Clause 3: Transaction and System Properties Related Items

The results of the ACID test must be disclosed, along with a description of how the ACID requirements were met. This includes disclosing which case was followed for the execution of Isolation Test 7. (8.1.4.1)

Atomicity Requirements

The system under test must guarantee that database transactions are atomic; the system will either perform all individual operations on the data, or will assure that no partially completed operations leave any effects on the data.

All ACID tests were conducted according to specification.

Completed Transactions

The following steps were performed twice to verify the Atomicity of completed transactions. One time a warehouse ID that was local to the node that the test was being run on was used. The second time a warehouse ID that was remote to the node that the test was being run on was used.

1. The balance was retrieved from the CUSTOMER table for a random Customer, District and Warehouse, giving BALANCE_1.
2. The Payment transaction was executed for the Customer, District and Warehouse used in step 1.
3. The balance was retrieved again for the Customer used in step 1 and step 2, giving BALANCE_2. It was verified that BALANCE_1 was greater than BALANCE_2 by AMT.

Aborted Transactions

The following steps were performed twice to verify the Atomicity of the aborted Payment transaction. One time a warehouse ID that was local to the node that the test was being run on was used. The second time a warehouse ID that was remote to the node that the test was being run on was used.

1. The Payment application code was changed to execute a rollback of the transaction instead of performing the commit.
2. Using the balance, BALANCE_2, from the CUSTOMER table retrieved for the completed transaction, the Payment transaction was executed for the Customer, District and Warehouse used in step 1 of section 3.1.1. The transaction rolled back due to the change in the application code from step 1.
3. The balance was retrieved again for the Customer used for step 2, giving BALANCE_3. It was verified that BALANCE_2 was equal to BALANCE_3.

Consistency Requirements

Consistency is the property of the application that requires any execution of a database transaction to take the database from one consistent state to another, assuming that the database is initially in a consistent state.

Consistency conditions one through four were tested using a shell script to issue queries to the database.The results of the queries demonstrated that the database was consistent for all four tests.

Isolation Requirements

Sufficient conditions must be enabled at either the system or the application level to ensure that the required isolation defined in Clause 3.4.1 is obtained.

Isolation tests one through seven were run using shell scripts to issue queries to the database. The shell scripts were run twice, once on a node that the warehouse being used locally and then again on a node that did not have the warehouse being used locally. Each script included timestamps to demonstrate the concurrency of operations. The results of the queries were captured and placed in files. The auditor reviewed the results and verified that the isolation requirements had been met.

In addition, the phantom tests and the stock-level tests were run and verified.

Case A was followed for Isolation test seven.

Durability Requirements

The tested system must guarantee durability: the ability to preserve the effects of committed transactions and ensure database consistency after recovery from any one of the failures listed in Clause 3.5.3.

- *Permanent irrecoverable failure of any single durable medium containing TPC-C database tables or recovery log data*
- *Instantaneous interruption (system crash/system hang) in processing that requires system reboot to recover*
- *Failure of all or part of memory (loss of contents)*

Recovery from all three of these failures was demonstrated as described in the following sections.

Loss of Data Test

The following steps were successfully performed to pass the Durability test of failure of a disk unit with database tables:

1. The contents of the database were backed up to several database dump devices during the initial database load. There were no dump devices on the disk array from which a drive was removed as part of this test.
2. The current count of the total number of orders was determined by the sum of D_NEXT_O_ID for all rows in the district table giving SUM1.
3. A test was started with 150 users submitting transactions over two server nodes.
4. A disk containing a portion of each of the tables in the tpcc database was removed causing SQL Server to report errors accessing that device.
5. The run was aborted and SQL Server was restarted. Upon restart, the database tpcc reported numerous errors relating to the failed database device.
6. The transaction log was dumped to disk and the failed disk was replaced with a spare disk and was recovered.
7. The database was recovered and restored from the backup dump devices. Afterwards, the transaction log was applied to the database.
8. Step 2 was repeated to obtain the current count of the total number of orders giving SUM2.
9. It was verified that the sum of D_NEXT _O_ID after the database is recovered is greater than or equal to the sum of D_NEXT_O_ID before the run, plus all new order transactions completed during the run minus any rollback transactions.
10. Consistency Condition 3 was verified.

Combined Loss of Log and Loss of System Test (Instantaneous Interruption and Loss of Memory)

1. The current count of the total number of orders was determined by the sum of D_NEXT_O_ID for all rows in the district table gving SUM1.
2. A test was started under full load with all users submitting transactions.
3. One disk from the log array was removed. Since the disk was RAID-1 mirrored, SQL Server continued to process transactions without interruption.
4. The test continued under full load with all users submitting transactions. A checkpoint was issued, and the system continued to run for another 5 minutes.
5. The server under test was powered off, which removed power from the system and the memory.
6. The server was powered on again.
7. SQL Server was started to initiate automatic recovery from its log.
8. Step 1 was repeated to obtain the current count of the total number of orders giving SUM2.
9. It was verified that the sum of D_NEXT_O_ID after the database is recovered is greater than or equal to the sum of D_NEXT_O_ID before the run, plus all new order transactions completed during the run minus any rollback transactions.

Loss of Interconnect

The following steps were performed:

1. The four Consistency conditions were tested.
2. The current count of the total number of orders, SUM1, was determined by obtaining the sum of the D_NEXT_O_ID column for all rows in the District table.
3. A measurement was started under full load with all users submitting transactions. When all users were submitting transactions, a checkpoint was executed.
4. The checkpoint lasted 9 minutes. During that time the measurement throughput reached a minimum of 90 percent of the reported throughput and maintained that level until the run was paused.
5. After the checkpoint had completed, power was removed from the interconnect switch and Benchcraft was paused and then stopped.
6. After one minute, the power cords were reconnected to the Giganet switches. There was a burst of I/O on the database drives as the fabric came back up.
7. The database was checkpointed. The database was stopped on all nodes.
8. The four Consistency conditions were again tested successfully.
9. Step 1 was repeated to obtain the current count of the total number of orders, SUM2.
10. The following relationship was verified:
    SUM2>= (SUM1 + New Order completed - New Orders rolled back)

Clause 4: Scaling and Database Population Related Items

Cardinality of Tables

The cardinality (e.g., the number of rows) of each table, as it existed at the start of the benchmark run (see Clause 4.2), must be disclosed. If the database was over-scaled and inactive rows of the WAREHOUSE table wer e deleted (see Clause 4.2.2), the cardinality of the WAREHOUSE table as initially configured and the number of rows deleted must be disclosed. (8.1.5.1)

The database was built with 9,968 warehouses, and the audited run used 9,968 warehouses.

Table 4-1. Initial Cardinality of Tables

Table Name	Rows
Warehouse	9,968
District	99,680
Item	100,000
New Order	89,712,000
History	299,040,000
Orders	299,040,000
Customer	299,040,000
Order Line	2,990,389,741
Stock	996,800,000
Inactive Warehouses	0

Distribution of Tables and Logs

The distribution of tables and logs across all media must be explicitly depicted for the tested and priced systems. (8.1.5.2)

The following series of table depicts the database configuration of the tested system to meet the 8-hour steady state requirement. The configuration was the same on all 4 nodes. The big_files file group contains the t_customer and t_stock tables. The misc_file group contains the other TPC-C tables.

Table 4-2. Distribution of Tables and Logs

Controller	Disk	Drives	Partition	Size	Use
1	Disk 0 Disk 1	2 - 9.1GB RAID-1 12 - 18.2GB RAID-10	C: NTFS F: RAW	8.47GB 78.17GB 23.53GB	OS DB Log Unallocated
2	Disk 2	28 - 18.2GB RAID-0	1 RAW 2 RAW	23.29GB 11.77GB 447GB	G: H: Free
3	Disk 3	28 - 9.1GB RAID-0	1 RAW 2 RAW	23.29GB 11.77GB 202.23GB	I: J: Free
4	Disk 4	28 - 9.1GB RAID-0	1 RAW 2 RAW S: NTFS	23.29GB 11.77GB 117.19GB 85.03GB	K: L: backup1-1 Free
5	Disk 5	28 - 9.1GB RAID-0	1 RAW 2 RAW T: NTFS	23.29GB 11.77GB 117.19GB 85.03GB	M: N: backup1-2 Free
6	Disk 6	28 - 9.1GB RAID-0	1 RAW 2 RAW U: NTFS	23.29GB 11.77GB 117.19GB 85.03GB	O: P: backup2-1 Free
7	Disk 7	28 - 9.1GB RAID-0	1 RAW 2 RAW V: NTFS	23.29GB 11.77GB 117.19GB 85.03GB	Q: R: backup2-2 Free

The ServeRAID-4H controller offers a standard 32MB battery-backed cache. The write policy for the operating system logical drive and the database log logical drive was set to write-through. All database logical drives used a write-back policy.

Database Model Implemented

A statement must be provided that describes:

1. *The database model implemented by the DBMS used (e.g., relational, network, hierarchical)*
2. *The database interface (e.g., embedded, call level) and access language (e.g., SQL, DL/1, COBOL, read/write) used to implement the TPC-C transactions. If more than one interface/access language is used to implement TPC-C, each interface/access language must be described and a list of which interface/access language is used with which transaction type must be disclosed.*

SQL Server 2000 is a relational database. The interface used was Microsoft SQL Server stored procedures accessed with Remote Procedure Calls embedded in C code using the Microsoft ODBC interface.

Partitions/Replications Mapping

The mapping of database partitions/replications must be explicitly described.

The database tables, with one exception, were partitioned across the server nodes using range partitioning. The warehouse ID was used as the partition key. The specifics of the distribution of database partitions across the physical media can be found in Table 4-2. The exception is the ITEM table, which was replicated across all nodes.

60-Day Space Requirement

Details of the 60-day space computations, along with proof that the database is configured to sustain 8 hours of growth for the dynamic tables (Order, Order-Line, and History) must be disclosed (see Clause 4.2.3). (8.1.5.5)

See Appendix D for details about how the 60-day space requirements were calculated.

Clause 5: Performance Metrics and Response Time Related Items

Measured tpmC

Measured tpmC must be reported. (8.1.6.1)

Measured tpmC: 121,319.23 tpmC

Price per tpmC: $18.97 per tpmC

Response Times

Ninetieth percentile, maximum and average response times must be reported for all transaction types as well as for the Menu response time. (8.1.6.2)

The TPC-C requirements for the average response time and the 90th percentile were met. Table 5-1 provides the response times for each of the transaction types and the menu for the measured system.

Table 5-1. Response Times in Seconds

Transaction Type	Average	Maximum	90th %
New-Order	0.78	24.82	1.30
Payment	0.77	26.10	1.30
Delivery (interactive)	0.33	2.19	0.83
Stock Level	0.57	6.11	1.10
Order Status	0.51	6.42	1.03
Delivery (deferred)	0.34	6.14	0.46
Menu	0.34	3.88	0.85

Keying/Think Times

The minimum, the average, and the maximum keying and think times must be reported for each transaction type. (8.1.6.3)

Table 5-2 lists the keying/think times for the measured system.

Table 5-2. Keying/Think Times

Transaction Type	Minimum	Average	Maximum
New-Order	18.00 / 0.00	18.01 / 12.04	18.07 / 120.51
Payment	3.00 / 0.00	3.01 / 12.05	3.07 120.51
Delivery	2.00 / 0.00	2.01 / 5.06	2.08 / 50.51
Stock Level	2.00 / 0.00	2.01 / 5.06	2.05 / 50.50
Order Status	2.00 / 0.00	2.01 10.07	2.05 / 100.51

Response Time Frequency Distribution Curves

Response time frequency distribution curves (see Clause 5.6.1) must be reported for each transaction type. (8.1.6.4)

Figure 5-1. New-Order Transaction - Response Time Frequency Distribution

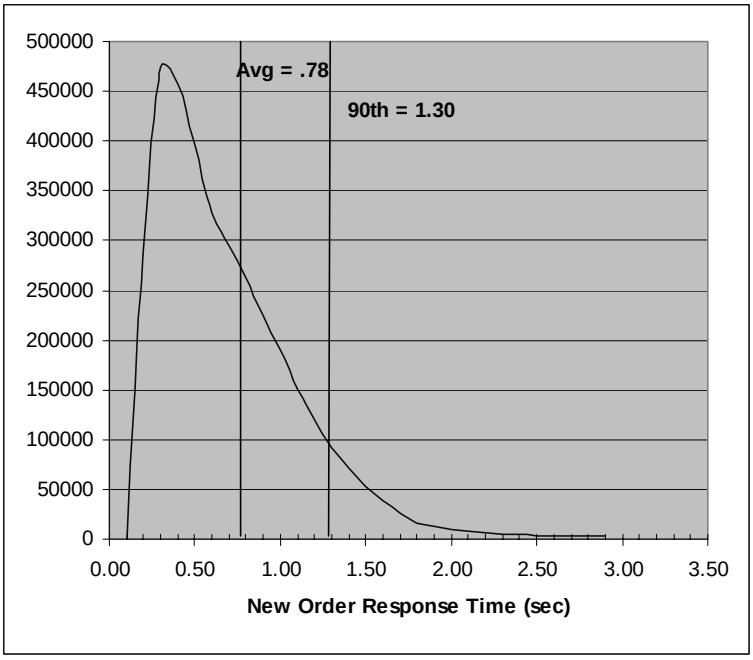

Figure 5-2. Payment Transaction - Response Time Frequency Distribution

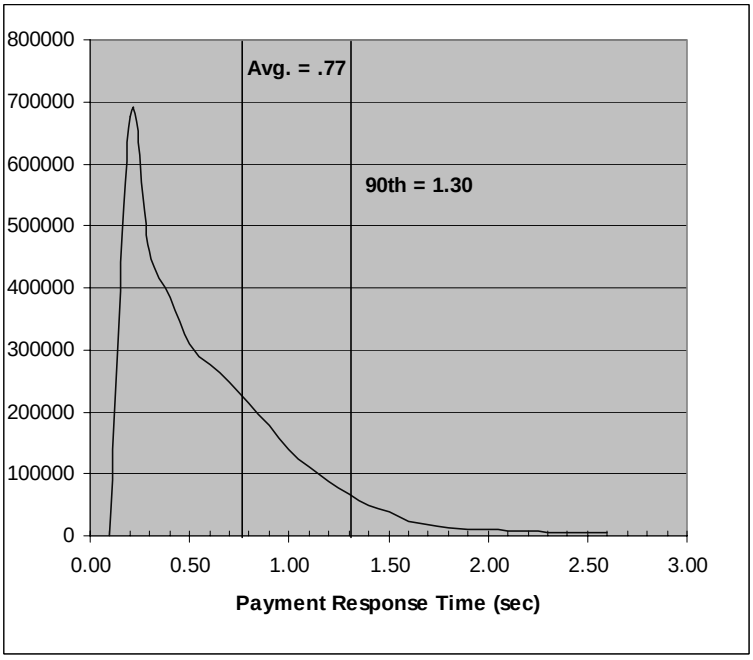

Figure 5-3. Order-Status Transaction - Response Time Frequency Distribution

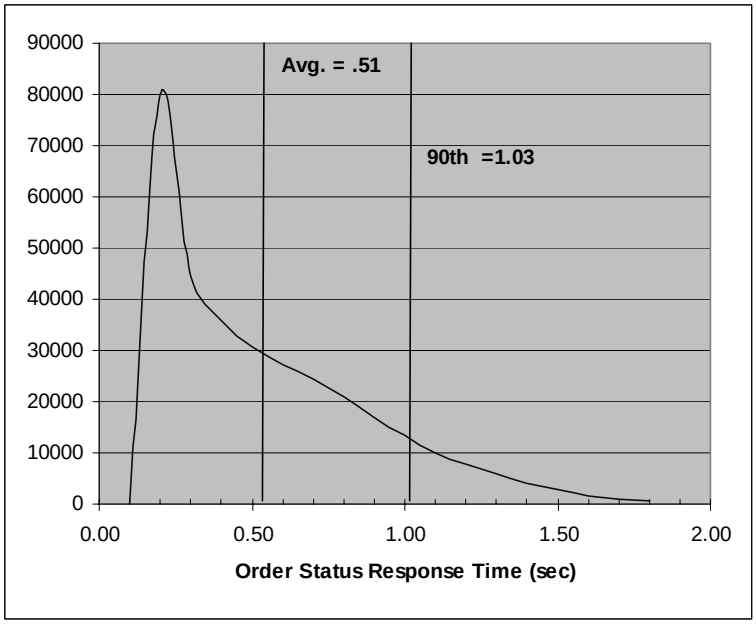

Figure 5-4. Delivery Transaction - Response Time Frequency Distribution

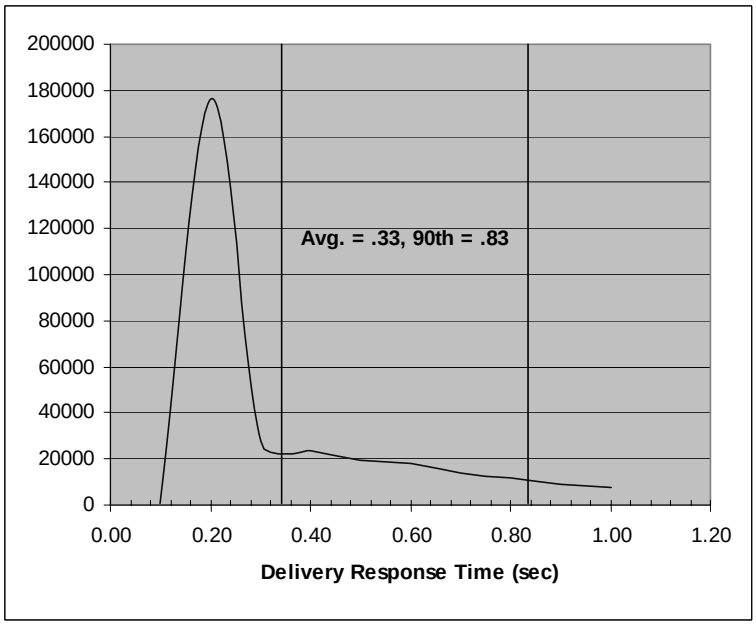

Figure 5-5. Stock-Level Transaction - Response Time Frequency Distribution

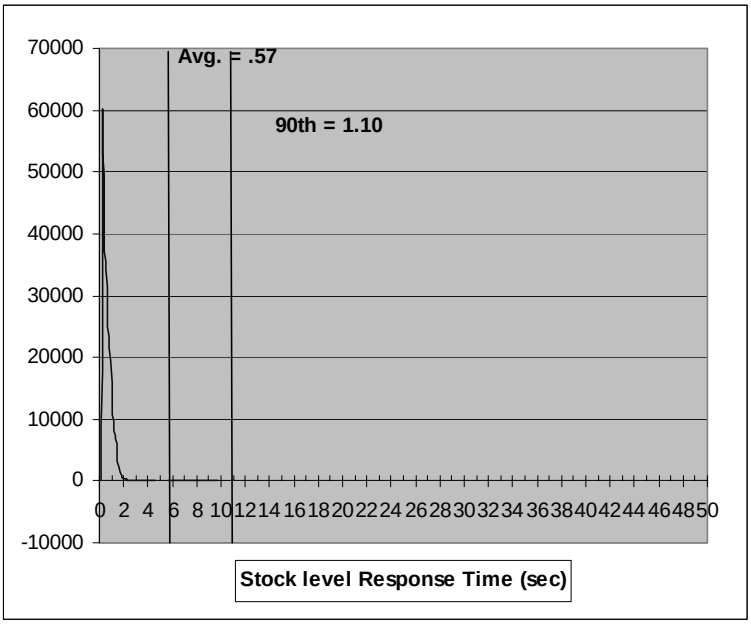

Performance Curve for Response Time vs. Throughput

The performance curve for response time vs. throughput (see Clause 5.6.2) must be reported for the New-Order transaction. (8.1.6.5)

Figure 5-6. New-Order Response Time vs. Throughput

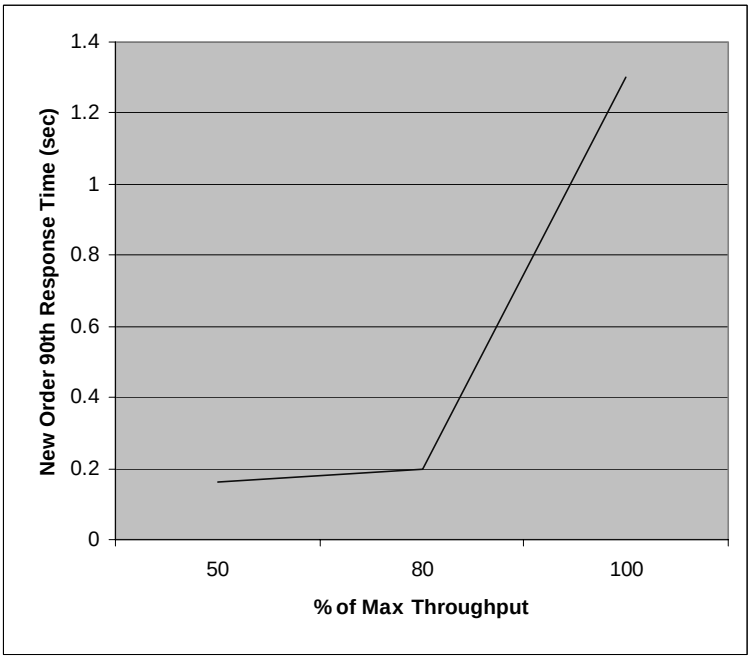

Figure 5-7. New-Order Think Time Distribution

Throughput vs. Elapsed Time

A graph of throughput vs. elapsed time (see Clause 5.6.5) must be reported for the New-Order transaction.

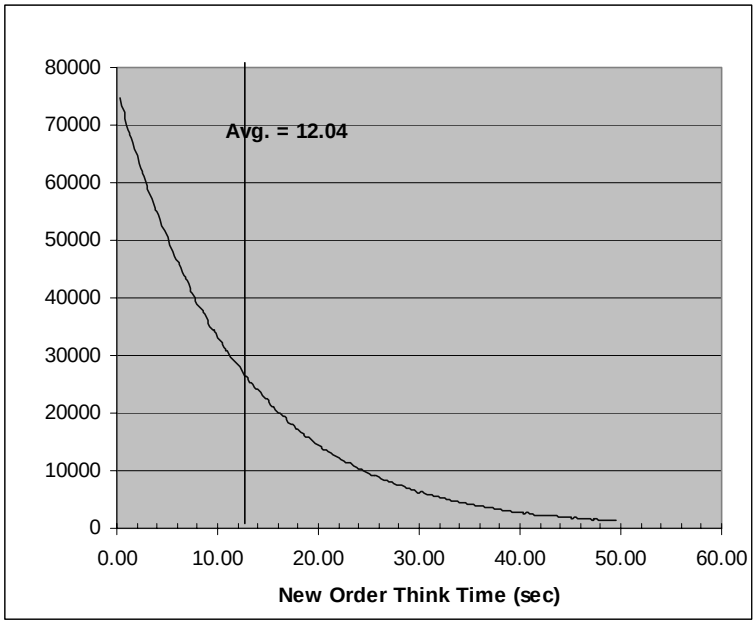

Figure 5-8. New-Order Throughput vs. Elapsed Time

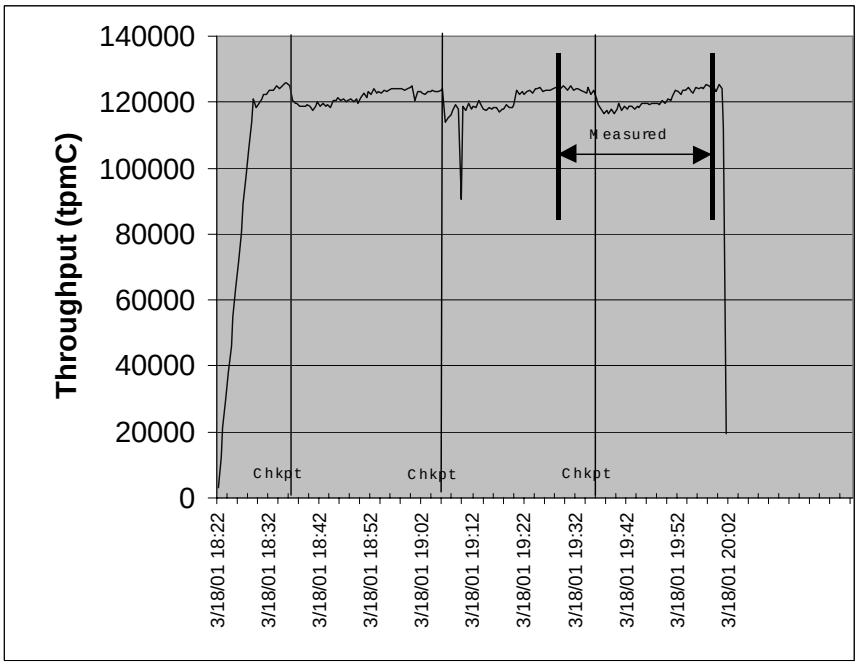

Steady State Methodology

The method used to determine that the SUT had reached a steady state prior to commencing the measurement interval (see Clause 5.5) must be described. (8.1.6.9)

Figure 5-8 shows that the system was in steady state at the beginning of the measurement interval.

Work Performed during Steady State

A description of how the work normally performed during a sustained test (e.g., checkpointing, writing redo/undo log records) actually occurred during the measurement interval must be reported. (8.1.6.10)

Transaction Flow

The RTE generated the required input data to choose a transaction from the menu. This data was time-stamped. The response for the requested transaction was verified and time-stamped in the RTE log files.

The RTE generated the required input data for the chosen transaction. It waited to complete the minimum required key time before transmitting the input screen. The transmission was time-stamped. The return of the screen with the required response data was time-stamped. The difference between these two time-stamps was the response time for that transaction and was logged in the RTE log.

The RTE then waited the required think time interval before repeating the process starting at selecting another transaction from the menu.

The RTE transmissions were sent to application processes running on the client machines through Ethernet LANs. These client application processes handled all screen I/O as well as all requests to the database on the server. The applications communicated with the database server over another Ethernet LAN using SQL ODBC library and SQL Server remote stored procedure calls.

Checkpoints

Checkpoints were executed on the server during the ramp-up phase and at 30-minute intervals. Each measured run contained one checkpoint. SQL Server was started with trace flag 3502, which causes it to log the occurrence of the checkpoint. This information was used to verify that the checkpoints occurred at the appropriate times during the test run.

During a checkpoint, SQL Server flushes all dirty pages from its cache to disk. It places a record in the database transaction log indicating that the checkpoint has completed and that all transactions, which were committed prior to the checkpoint have been written to disk.

Reproducibility Methodology

A description of the method used to determine the reproducibility of the measurement results must be reported. (8.1.6.11)

A repeatability measurement was taken on the xSeries 370 server for the same length of time as the measured run. The repeatability measurement was 120,460.87 tpmC.

Measurement Interval

A statement of the duration of the measurement interval for the reported Maximum Qualified Throughput (tpmC) must be included. (8.1.6.12)

The measurement interval was 30 minutes.

Transaction Mix

The method of regulation of the transaction mix (e.g., card decks or weighted random distribution) must be described. If weighted distribution is used and the RTE adjusts the weights associated with each transaction type, the maximum adjustments to the weight from the initial value must be disclosed. (8.1.6.13)

See Table 5-3.

The RTE was given a weighted random distribution, which was not adjusted during the run.

Percentage of Total Mix

The percentage of the total mix for each transaction type must be disclosed.

See Table 5-3.

Table 5-3. Transaction Statistics and Transaction Mix

New Order	Value (%)
Home warehouse order lines	99.00
Remote warehouse order lines	1.00
Rolled back transactions	1.00
Average number of items per order	10.00
Payment	
Home warehouse payment transactions	85.00
Remote warehouse payment transactions	15.00
Non-Primary Key Access	
Payment transactions using C_LAST	60.01
Order-Status transactions using C_LAST	60.01
Delivery	
Delivery transactions skipped	0
Transaction Mix	
New-Order	44.83
Payment	43.03
Delivery	4.04
Stock Level	4.05
Order Status	4.06

Clause 6: SUT, Driver and Communication Definition Related Items

Description of RTE

The RTE input parameters, code fragments, functions, etc., used to generate each transaction input field must be disclosed. (8.1.7.1)

The RTE used was Microsoft BenchCraft V2.0 RTE. Benchcraft is a proprietary tool provided by Microsoft and is not commercially available. The RTE input is listed in Appendix C.

Emulated Components

It must be demonstrated that the functionality and performance of the components being emulated in the Driver System are equivalent to that of the priced system. The results of the test described in Clause 6.6.3.4 must be disclosed. (8.1.7.2)

No components were emulated.

Benchmarked and Targeted System Configuration Diagrams

A complete functional diagram of both the benchmarked configuration and the configuration of the proposed (target) system must be disclosed. A detailed list of all software and hardware functionality being performed on the Driver System, and its interface to the SUT must be disclosed (see Clause 6.6.3.6).

The driver RTE generated the transaction input data and transmitted it to the client in HTML format. The driver RTE received the output from the System under Test, time-stamped it, and forwarded it to the Master RTE for post-test processing. No other functionality was included on the driver RTE.

Detailed diagrams of the benchmarked and priced configurations are provided in the section called “General Items” at the beginning of this document.

Network Configuration

The network configurations of both the tested services and the proposed (target) services which are being represented and a thorough explanation of exactly which parts of the proposed configuration are being replaced with the Driver System must be disclosed (see Clause 6.6.4). (8.1.7.4)

The client-to-server LAN connections used 100Mbps switched Ethernet for both the measured and priced configurations. The server-to-server connections used a Giganet cLAN-5000 Switch for both the measured and priced configurations. The server-to-server protocol was VIA.

Network Bandwidth

The bandwidth of the network(s) used in the tested/priced configuration must be disclosed. (8.1.7.5)

The Ethernet used in the LAN complies with the IEEE.802.3 standard. The LANs that connected the driver RTEs to the clients had a bandwidth of 10Mbps. The LAN that connected the clients to the server had a bandwidth of 100Mbps.

Operator Intervention

If the configuration requires operator intervention (see Clause 6.6.6), the mechanism and the frequency of this intervention must be disclosed. (8.1.7.6)

The configuration did not require any operator intervention to sustain the reported throughput during the eight-hour period.

Clause 7: Pricing Related Items

Hardware and Software Components

A detailed list of the hardware and software used in the priced system must be reported. Each separately orderable item must have a vendor part number, description and release/revision level, and either general availability status or committed delivery date. If package-pricing is used, vendor part number of the package and a description uniquely identifying each of the components of the package must be disclosed.

Pricing source(s) and effective date(s) must also be reported. (8.1.8.1)

The total 3-year price of the entire configuration must be reported, including: hardware, software, and maintenance charges. Separate component pricing is recommended. The basis of all discounts used must be disclosed. (8.1.8.2)

A detailed list of all hardware and software, including the 3-year price, is provided in the Executive Summary at the front of this report. All third-party quotations are included in Appendix E at the end of this document.

Availability Date

The committed delivery date for general availability (availability date) of products used in the price calculations must be reported. When the priced system includes products with different availability dates, the reported availability for the priced system must be the date at which all components are committed to be available. (8.1.8.3)

The 900MHz model of the xSeries 370 server, along with the 900MHz processor option, will be generally available April 13, 2001. All other hardware is generally available now. Datacenter Server will be generally available May 31, 2001. All other software used in this benchmark is generally available now.

Measured tpmC

A statement of the measured tpmC, as well as the respective calculations for the 3-year pricing, price/performance (price/tpmC) and the availability date must be included. (8.1.8.4)

- Maximum Qualified Throughput: 121,319.23 tpmC
- Price per tpmC: $18.97 per tpmC
- Three-year cost of ownership: $2,301,858

Country-Specific Pricing

Additional Clause 7 related items may be included in the Full Disclosure Report for each country-specific priced configuration. Country-specific pricing is subject to Clause 7.1.7.

The configuration is priced for the United States of America.

Usage Pricing

For any usage pricing, the sponsor must disclose:

- *Usage level at which the component was priced.*
- *A statement of the company policy allowing such pricing. (8.1.8.6)*

The component pricing based on usage is shown below:

- 4 copies of Microsoft Windows 2000 Datacenter Server
- 12 copies of Microsoft Windows 2000 Server

- 3-year support for all hardware components (spares were priced for hardware components for which 4-hour response time is not offered)

System Pricing

System pricing should include subtotals for the following components: Server Hardware, Server Software, Client Hardware, Client Software, and Network Components used for terminal connection (see Clause 7.2.2.3). (8.1.8.7) System pricing must include line item indication where non-sponsoring companies' brands are used. System pricing must also include line item indication of third-party pricing. (8.1.8.8)

A detailed list of all hardware and software, including the 3-year price, is provided in the Executive Summary at the front of this report. All third-party quotations are included in Appendix E at the end of this document.

Clause 9: Audit Related Items

Auditor

The auditor's name, address, phone number, and a copy of the auditor's attestation letter indicati ng compliance must be included in the Full Disclosure Report. (8.1.9.1)

This implementation of the TPC-C benchmark was audited by Brad Askins of InfoSizing, Inc. The auditor's attestation letter is provided in this section.

Availability of the Full Disclosure Report

The Full Disclosure Report must be readily available to the public at a reasonable charge, similar to the charges for similar documents by the test sponsor. The report must be made available when results are made public. In order to use the phrase "TPC Benchmark™C," the Full Disclosure Report must have been submitted to the TPC Administrator as well as written permission obtained to distribute same. (8.2)

This implementation of the TPC Benchmark C was audited by Brad Askins of InfoSizing, Inc. Further information may be obtained from:

InfoSizing, Inc.
1373 North Franklin Street
Colorado Springs, CO 80903
Phone: 719-473-7555
Fax: 719-473-7554

INFO SIZING

TPC TRANSACTION PROCESSING PERFORMANCE COUNCIL CERTIFIED AUDITOR

Benchmark Sponsor: William D. Hall
Mgr., Server Systems Performance
IBM Server Group
3039 Cornwallis Road
Research Triangle Park, NC27709

April 5, 2001

I verified the TPC Benchmark™ C performance and reviewed the upgrade from TPC-C Version 3.5 to TPC-C Version 5 for the following Client/Server configuration:

Platform:	**IBM @server xSeries 370**
Operating system:	**Microsoft Windows 2000 Datacenter Server**
Database Manager:	**Microsoft SQL Server 2000 Enterprise Edition**
Transaction Manager:	**Microsoft COM+**

The results were:

CPU's Speed	Memory	Disks(total)	NewOrder 90% Response Time	**tpmC**
4 Servers: IBM @server xSeries 370 each with:				
8 x Pentium III Xeon (900 MHz)	32 GB Main (2MB L2 Cache per processor)	40 x 18.2 GB 140 x 9.1 GB	1.30 Seconds	**121319.23**
8 Clients: IBM Netfinity 5100 each with:				
2 x Pentium III (733 MHz)	512 MB Main (256KB L2 Cache per processor	1 x 9.1 GB	n/a	
4 Clients: IBM @server xSeries 220 each with:				
2 x Pentium III (933 MHz)	640 MB Main (256KB L2 Cache per processor	1 x 9.1 GB	n/a	

In my opinion, these performance results were produced in compliance with the TPC's requirements for the benchmark. The following verification items were given special attention:

- The database records were the proper size
- The database was properly scaled and populated
- The required ACID properties were met
- The transactions were correctly implemented
- Input data was generated according to the specified percentages
- The transaction cycle times included the required keying and think times
- The reported response times were correctly measured.
- All 90% response times were under the specified maximums
- At least 90% of all delivery transactions met the 80 Second completion time limit
- The reported measurement interval was 30 minutes (1800 seconds)
- The reported measurement interval was representative of steady state conditions
- One checkpoint was taken during the reported measurement interval
- The repeatability of the measured performance was verified
- The 60 day storage requirement was correctly computed
- The ability to update primary keys with the same syntax as other columns was verified.
- The system pricing was verified for major components and maintenance

Respectfully Yours,

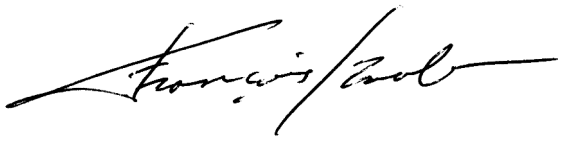

François Raab, President

Bradley J. Askins, Auditor

1373 North Franklin Street • Colorado Springs, CO 80903-2527 • Office: 719/473-7555 • Fax: 719/473-7554

Appendix A: Source Code

Web Client Source Code

dlldata.c

```
/*********************************************************
   DllData file -- generated by MIDL compiler

       DO NOT ALTER THIS FILE

   This file is regenerated by MIDL on every IDL file compile.

   To completely reconstruct this file, delete it and rerun MIDL
   on all the IDL files in this DLL, specifying this file for the
   /dlldata command line option

*********************************************************/


#include <rpcproxy.h>

#ifdef __cplusplus
extern "C"   {
#endif

EXTERN_PROXY_FILE( tpcc_com_remote_ps )


PROXYFILE_LIST_START
/* Start of list */
  REFERENCE_PROXY_FILE( tpcc_com_remote_ps ),
/* End of list */
PROXYFILE_LIST_END


DLLDATA_ROUTINES( aProxyFileList, GET_DLL_CLSID )

#ifdef __cplusplus
}  /*extern "C" */
#endif

/* end of generated dlldata file */
```

error.h

```
                                                        /*
FILE:                   ERROR.H
 *                                              Microsoft TPC-C Kit Ver.
4.20.000
 *                                              Copyright Microsoft,
1999
 *              All Rights Reserved
 *
 *                                              Version 4.10.000 audited
by Richard Gimarc, Performance Metrics, 3/17/99
 *
 *              PURPOSE:                Header file for error exception
classes.
 *
 *  Change history:
 *                      4.20.000 - updated rev number to match kit
 *                      4.21.000 - fixed bug: ~CBaseErr needed to be
declared virtual
 */

#pragma once

#ifndef _INC_STRING
        #include <string.h>
#endif

const int m_szMsg_size = 512;
const int m_szApp_size = 64;
const int m_szLoc_size = 64;

//error message structure used in ErrorText routines
typedef struct _SERRORMSG
{
        int             iError;
//error id of message
        char    szMsg[256];
//message to sent to browser
} SERRORMSG;

typedef enum _ErrorLevel
{
        ERR_FATAL_LEVEL                         = 1,
        ERR_WARNING_LEVEL               = 2,
        ERR_INFORMATION_LEVEL = 3
} ErrorLevel;


#define ERR_TYPE_LOGIC
                -1              //logic error in program;
internal error
#define ERR_SUCCESS
                        0               //success (a
non-error error)
#define ERR_BAD_ITEM_ID
                1               //expected abort record in
txnRecord
#define ERR_TYPE_DELIVERY_POST
        2               //expected delivery post failed
#define     ERR_TYPE_WEBDLL
                        3               //tpcc web
generated error
#define     ERR_TYPE_SQL
                4               //sql server generated error
#define     ERR_TYPE_DBLIB
                5               //dblib generated error
#define     ERR_TYPE_ODBC
                6               //odbc generated error
#define ERR_TYPE_SOCKET
                7               //error on communication
socket client rte only
#define ERR_TYPE_DEADLOCK
                8               //dblib and odbc only
deadlock condition
#define ERR_TYPE_COM
                9               //error from COM call
#define ERR_TYPE_TUXEDO
                10              //tuxedo error
#define ERR_TYPE_OS
                        11              //operating
system error
#define ERR_TYPE_MEMORY
                12              //memory allocation error
```

```
#define ERR_TYPE_TPCC_ODBC
                13                      //error from tpcc odbc txn
module
#define ERR_TYPE_TPCC_DBLIB
                14                      //error from tpcc dblib txn
module
#define ERR_TYPE_DELISRV
        15              //delivery server error
#define ERR_TYPE_TXNLOG
                16                      //txn log error
#define ERR_TYPE_BCCONN
                17                      //Benchcraft connection
class
#define ERR_TYPE_TPCC_CONN
                18                      //Benchcraft connection
class
#define ERR_TYPE_ENCINA
                19                      //Encina error
#define ERR_TYPE_COMPONENT
                20                      //error from COM
component
#define ERR_TYPE_RTE
                21                      //Benchcraft rte
#define ERR_TYPE_AUTOMATION
                22                      //Benchcraft automation
errors
#define ERR_TYPE_DRIVER
                23                      //Driver engine errors
#define ERR_TYPE_RTE_BASE
                24                      //Framework errors

// TPC-W error types
#define ERR_TYPE_TPCW_CONN
                50                      //Benchcraft connection
class
#define ERR_TYPE_TPCW_HTML
                51                      //error from TpcwHtml dll
#define ERR_TYPE_TPCW_USER
                52                      //error from TPC-W user
class
#define ERR_TYPE_TPCW_ENG_BASE
        53
#define ERR_TYPE_TPCW_ENG_OS
        54
#define ERR_TYPE_HTML_RESP
                55
#define ERR_TYPE_TPCW_ODBC
                56

#define ERR_INS_MEMORY                          "Insufficient
Memory to continue."
#define ERR_UNKNOWN
"Unknown error."
#define ERR_MSG_BUF_SIZE        512
#define INV_ERROR_CODE                  -1

class CBaseErr
{
public:
        CBaseErr(LPCTSTR szLoc = NULL)
        {
                m_idMsg         = INV_ERROR_CODE;

                if (szLoc)
                {
                        m_szLoc = new char[m_szLoc_size];
                        strcpy(m_szLoc, szLoc);
                }
                else
                        m_szLoc   = NULL;

                m_szApp         = new
char[m_szApp_size];
                GetModuleFileName(GetModuleHandle(NULL),
m_szApp, m_szApp_size);
        }

        CBaseErr(int idMsg, LPCTSTR szLoc = NULL)
        {
                m_idMsg         = idMsg;

                if (szLoc)
                {
                        m_szLoc = new char[m_szLoc_size];
                        strcpy(m_szLoc, szLoc);
                }
                else
                        m_szLoc   = NULL;

                m_szApp         = new
char[m_szApp_size];
                GetModuleFileName(GetModuleHandle(NULL),
m_szApp, m_szApp_size);
        }

        virtual ~CBaseErr(void)
        {
                if (m_szApp)
                        delete [] m_szApp;
                if (m_szLoc)
                        delete [] m_szLoc;
        };

        virtual void Draw(HWND hwnd, LPCTSTR szStr = NULL)
        {
                int             j = 0;
                char    szTmp[512];

                if (szStr)
                        j = wsprintf(szTmp, "%s\n",szStr);
                if (ErrorNum() != INV_ERROR_CODE)
                        j += wsprintf(szTmp+j, "Error =
%d\n", ErrorNum());
                if (m_szLoc)
                        j += wsprintf(szTmp+j, "Location =
%s\n", GetLocation());

                j += wsprintf(szTmp+j, "%s\n", ErrorText());

                ::MessageBox(hwnd, szTmp, m_szApp,
MB_OK);
        }

        char *GetApp(void) { return m_szApp; }
        char *GetLocation(void) { return m_szLoc; }
        virtual int ErrorNum() { return m_idMsg; }
        virtual int ErrorType() = 0;        // a value which
distinguishes the kind of error that occurred
        virtual char *ErrorText() = 0; // a string (i.e., human
readable) representation of the error

protected:
        char    *m_szApp;
        char    *m_szLoc;// code location where the error
occurred
        int             m_idMsg;
```

```
};

class CSocketErr : public CBaseErr
{
public:
	enum Action
	{
		eNone = 0,
		eSend,
		eSocket,
		eBind,
		eConnect,
		eListen,
		eHost,
		eRecv,
		eGetHostByName,
		eWSACreateEvent,
		eWSASend,
		eWSAGetOverlappedResult,
		eWSARecv,
		eWSAWaitForMultipleEvents,
		eWSAStartup,
		eWSAResetEvent,
	};

	CSocketErr(Action eAction, LPCTSTR szLocation =
NULL);

	~CSocketErr()
	{
		if (m_szErrorText != NULL)
			delete [] m_szErrorText;
	};

	Action	m_eAction;
	char	*m_szErrorText;

	int ErrorType() { return ERR_TYPE_SOCKET;};
	char *ErrorText(void);

};

class CSystemErr : public CBaseErr
{
public:
	enum Action
	{
		eNone = 0,
		eTransactNamedPipe,
		eWaitNamedPipe,
		eSetNamedPipeHandleState,
		eCreateFile,
		eCreateProcess,
		eCallNamedPipe,
		eCreateEvent,
		eCreateThread,
		eVirtualAlloc,
		eReadFile = 10,
		eWriteFile,
		eMapViewOfFile,
		eCreateFileMapping,
		eInitializeSecurityDescriptor,
		eSetSecurityDescriptorDacl,
		eCreateNamedPipe,
		eConnectNamedPipe,
		eWaitForSingleObject,
		eRegOpenKeyEx,
		eRegQueryValueEx = 20,
		ebeginthread,
		eRegEnumValue,
		eRegSetValueEx,
		eRegCreateKeyEx,
		eWaitForMultipleObjects,
		eRegisterClassEx,
		eCreateWindow,
		eCreateSemaphore,
	};

		CSystemErr(Action eAction,
LPCTSTR szLocation);
		CSystemErr(int iError, Action
eAction, LPCTSTR szLocation);
	int		ErrorType() { return
ERR_TYPE_OS;};
	char	*ErrorText(void);
	void	Draw(HWND hwnd, LPCTSTR szStr = NULL);

	Action	m_eAction;

private:
	char m_szMsg[ERR_MSG_BUF_SIZE];
};

class CMemoryErr : public CBaseErr
{
public:
	CMemoryErr();

	int ErrorType() {return ERR_TYPE_MEMORY;}
	char *ErrorText() {return ERR_INS_MEMORY;}
};
```

install.c

```
/*	FILE:		INSTALL.C
 *
 *	Microsoft TPC-C Kit Ver.
4.20.000
 *
 *	Copyright Microsoft,
1999
 *	All Rights Reserved
 *
 *
 *	not audited
 *
 *	PURPOSE:	Automated installation application
for TPC-C Web Kit
 *	Contact:	Charles Levine (clevine@microsoft.com)
 *
 *  Change history:
 *		4.20.000 - added COM installation steps
 */

#include <windows.h>
#include <direct.h>
#include <io.h>
#include <stdlib.h>
#include <stdio.h>
#include <commctrl.h>
#include "..\..\common\src\ReadRegistry.h"

#include "resource.h"

#define	WM_INITTEXT		WM_USER+100

HICON		hIcon;
```

```
HINSTANCE		hInst;

DWORD			versionExeMS;
DWORD			versionExeLS;
DWORD			versionExeMM;
DWORD			versionDllMS;
DWORD			versionDllLS;

// TPC-C registry settings
TPCCREGISTRYDATA	Reg;

static	int		iPoolThreadLimit;
static	int		iThreadTimeout;
static	int		iListenBackLog;
static	int		iAcceptExOutstanding;

static	int		iMaxPhysicalMemory;
//max physical memory in MB
static	char	szLastFileName[64];		// last file we
worked on (for error reporting)


BOOL	CALLBACK	LicenseDlgProc(HWND hwnd, UINT
uMsg, WPARAM wParam, LPARAM lParam);
BOOL	CALLBACK	UpdatedDlgProc(HWND hwnd,
UINT uMsg, WPARAM wParam, LPARAM lParam);
BOOL	CALLBACK	MainDlgProc(HWND hwnd, UINT
uMsg, WPARAM wParam, LPARAM lParam);
BOOL	CALLBACK	CopyDlgProc(HWND hwnd, UINT
uMsg, WPARAM wParam, LPARAM lParam);
static	void		ProcessOK(HWND hwnd, char
*szDllPath);
static	void		ReadRegistrySettings(void);
static	void		WriteRegistrySettings(char
*szDllPath);
static	BOOL		RegisterDLL(char *szFileName);
static	int			CopyFiles(HWND hDlg,
char *szDllPath);
static	BOOL		GetInstallPath(char *szDllPath);
static	void		GetVersionInfo(char *szDLLPath,
char *szExePath);
static	BOOL		CheckWWWebService(void);
static	BOOL		StartWWWebService(void);
static	BOOL		StopWWWebService(void);
static	void		UpdateDialog(HWND hDlg);

BOOL install_com(char *szDllPath);

#include "..\..\common\src\ReadRegistry.cpp"

int WINAPI WinMain( HINSTANCE hInstance, HINSTANCE
hPrevInstance, LPSTR lpCmdLine, int nCmdShow )
{
	int iRc;

	hInst = hInstance;

	InitCommonControls();

	hIcon = LoadIcon(hInstance,
MAKEINTRESOURCE(IDI_ICON1));

	iRc = DialogBox(hInstance,
MAKEINTRESOURCE(IDD_DIALOG4),GetDesktopWindow(),
LicenseDlgProc);
	if ( iRc )
	{
		iRc = DialogBox(hInstance,
MAKEINTRESOURCE(IDD_DIALOG1),GetDesktopWindow(),
MainDlgProc);
		if ( iRc )
		{
			DialogBoxParam(hInstance,
MAKEINTRESOURCE(IDD_DIALOG2),GetDesktopWindow(),
UpdatedDlgProc, (LPARAM)iRc);
		}
	}

	DestroyIcon(hIcon);
	return 0;
}

BOOL CALLBACK LicenseDlgProc(HWND hwnd, UINT uMsg,
WPARAM wParam, LPARAM lParam)
{
	HGLOBAL			hRes;
	HRSRC			hResInfo;
	BYTE			*pSrc, *pDst;
	DWORD			dwSize;
	static HFONT	hFont;

	switch(uMsg)
	{
		case WM_INITDIALOG:
			hFont = CreateFont(-12, 0, 0, 0, 400,
0, 0, 0, 0, 0, 0, 0, 0, "Arial");
			SendMessage( GetDlgItem(hwnd,
IDR_LICENSE1), WM_SETFONT, (WPARAM)hFont,
MAKELPARAM(0, 0) );
			PostMessage(hwnd,
WM_INITTEXT, (WPARAM)0, (LPARAM)0);
			return TRUE;
		case WM_INITTEXT:
			hResInfo = FindResource(hInst,
MAKEINTRESOURCE(IDR_LICENSE1),"LICENSE");
			dwSize = SizeofResource(hInst,
hResInfo);
			hRes = LoadResource(hInst,
hResInfo );
			pSrc = (BYTE
*)LockResource(hRes);
			pDst = (unsigned char
*)malloc(dwSize+1);
			if ( pDst )
			{
				memcpy(pDst, pSrc,
dwSize);
				pDst[dwSize] = 0;
				SetDlgItemText(hwnd,
IDC_LICENSE, (const char *)pDst);
				free(pDst);
			}
			else
				SetDlgItemText(hwnd,
IDC_LICENSE, (const char *)pSrc);
			return TRUE;
		case WM_DESTROY:
			DeleteObject(hFont);
			return TRUE;
		case WM_COMMAND:
			if ( wParam == IDOK )
				EndDialog(hwnd, TRUE);
			if ( wParam == IDCANCEL )
				EndDialog(hwnd,
FALSE);
```

```
                default:
                        break;
        }
        return FALSE;
}

BOOL CALLBACK UpdatedDlgProc(HWND hwnd, UINT uMsg,
WPARAM wParam, LPARAM lParam)
{
        switch(uMsg)
        {
                case WM_INITDIALOG:
                        switch(lParam)
                        {
                                case 1:
                                case 2:

SetDlgItemText(hwnd, IDC_RESULTS, "TPC-C Web Client
Installed");
                                                break;
                        }
                        return TRUE;
                case WM_COMMAND:
                        if ( wParam == IDOK )
                                EndDialog(hwnd, TRUE);
                        break;
                default:
                        break;
        }
        return FALSE;
}

BOOL CALLBACK MainDlgProc(HWND hwnd, UINT uMsg,
WPARAM wParam, LPARAM lParam)
{
        PAINTSTRUCT             ps;
        MEMORYSTATUS    memoryStatus;
        OSVERSIONINFO   VI;
        char                    szTmp[256];
        static char             szDllPath[256];
        static char             szExePath[256];

        switch(uMsg)
        {
                case WM_INITDIALOG:

GlobalMemoryStatus(&memoryStatus);
                        iMaxPhysicalMemory=
(memoryStatus.dwTotalPhys/ 1048576);

                        if ( GetInstallPath(szDllPath) )
                        {
                                MessageBox(hwnd, "Error
internet service inetsrv is not installed.", NULL, MB_ICONSTOP |
MB_OK);
                                EndDialog(hwnd,
FALSE);
                                return TRUE;
                        }

                        // set default values
                        ZeroMemory( &Reg, sizeof(Reg) );
                        ReadTPCCRegistrySettings( &Reg );
                        ReadRegistrySettings();

                        Reg.dwNumberOfDeliveryThreads =
7;
                        Reg.dwMaxConnections = 10000;
                        Reg.dwMaxPendingDeliveries    =
1000;
                        Reg.eDB_Protocol = ODBC;
                        Reg.eTxnMon = COM;
                        strcpy(Reg.szDbName,
"tpcc");
                        strcpy(Reg.szDbUser,
"sa");
                        strcpy(Reg.szDbPassword,        "");

//                      iPoolThreadLimit =
iMaxPhysicalMemory * 2;
                        iPoolThreadLimit =  190;

                        iThreadTimeout = 86400;
                        iListenBackLog = 150;
                        iAcceptExOutstanding = 40;

                        GetModuleFileName(hInst,
szExePath, sizeof(szExePath));
                        GetVersionInfo(szDllPath,
szExePath);

                        wsprintf(szTmp, "Version
%d.%2.2d.%3.3d", versionExeMS, versionExeMM, versionExeLS);
                        SetDlgItemText(hwnd,
IDC_VERSION, szTmp);

                        SetDlgItemText(hwnd, IDC_PATH,
szDllPath);

                        SetDlgItemText(hwnd,
ED_DB_SERVER, Reg.szDbServer);
                        SetDlgItemText(hwnd,
ED_DB_USER_ID, Reg.szDbUser);
                        SetDlgItemText(hwnd,
ED_DB_PASSWORD, Reg.szDbPassword);
                        SetDlgItemText(hwnd,
ED_DB_NAME, Reg.szDbName);

                        SetDlgItemInt(hwnd,
ED_THREADS, Reg.dwNumberOfDeliveryThreads, FALSE);
                        SetDlgItemInt(hwnd,
ED_MAXCONNECTION, Reg.dwMaxConnections, FALSE);
                        SetDlgItemInt(hwnd,
ED_MAXDELIVERIES, Reg.dwMaxPendingDeliveries, FALSE);
                        SetDlgItemInt(hwnd,
ED_IIS_MAX_THEAD_POOL_LIMIT,iPoolThreadLimit, FALSE);
                        SetDlgItemInt(hwnd,
ED_IIS_THREAD_TIMEOUT, iThreadTimeout, FALSE);
                        SetDlgItemInt(hwnd,
ED_IIS_LISTEN_BACKLOG,iListenBackLog, FALSE);
                        SetDlgItemInt(hwnd,
ED_WEB_SERVICE_BACKLOG_QUEUE_SIZE,
iAcceptExOutstanding, FALSE);



                        CheckDlgButton(hwnd,
IDC_DBLIB, 0);
                        CheckDlgButton(hwnd, IDC_ODBC,
 0);

                        if ( Reg.eDB_Protocol == DBLIB )
                                CheckDlgButton(hwnd,
IDC_DBLIB, 1);
                        else if (Reg.eDB_Protocol ==
ODBC)
```

```
                                        CheckDlgButton(hwnd,
IDC_ODBC, 1);

                        // check OS version level for COM.
Must be at least Windows 2000
                        VI.dwOSVersionInfoSize =
sizeof(VI);
                        GetVersionEx( &VI );
                        if (VI.dwMajorVersion < 5)
                        {
                                HWND hDlg =
GetDlgItem( hwnd, IDC_TM_MTS );
                                EnableWindow( hDlg, 0 );
// disable COM option
                                if (Reg.eTxnMon ==
COM)
                                        Reg.eTxnMon
= None;
                        }

                        CheckDlgButton(hwnd,
IDC_TM_NONE,   0);
                        CheckDlgButton(hwnd,
IDC_TM_TUXEDO, 0);
                        CheckDlgButton(hwnd,
IDC_TM_MTS,    0);
                        CheckDlgButton(hwnd,
IDC_TM_ENCINA,   0);
                        switch (Reg.eTxnMon)
                        {
                        case None:
                                CheckDlgButton(hwnd,
IDC_TM_NONE,   1);
                                break;
                        case TUXEDO:
                                CheckDlgButton(hwnd,
IDC_TM_TUXEDO, 1);
                                break;
                        case ENCINA:
                                CheckDlgButton(hwnd,
IDC_TM_ENCINA, 1);
                                break;
                        case COM:
                                CheckDlgButton(hwnd,
IDC_TM_MTS,        1);
                                break;
                        }

                        return TRUE;
                case WM_PAINT:
                        if ( IsIconic(hwnd) )
                        {
                                BeginPaint(hwnd, &ps);
                                DrawIcon(ps.hdc, 0, 0,
hIcon);
                                EndPaint(hwnd, &ps);
                                return TRUE;
                        }
                        break;
                case WM_COMMAND:
                        if ( HIWORD(wParam) ==
BN_CLICKED )
                        {
                                switch(
LOWORD(wParam) )
                                {
                                        case
IDC_DBLIB:
return TRUE;
                                        case
IDC_ODBC:
return TRUE;
                                        case IDOK:
ProcessOK(hwnd, szDllPath);
return TRUE;
                                        case
IDCANCEL:
EndDialog(hwnd, FALSE);
return TRUE;
                                        default:
return FALSE;
                                }
                        }
                        break;
                default:
                        break;
        }
        return FALSE;
}

static void ProcessOK(HWND hwnd, char *szDllPath)
{
        int             d;
        HWND    hDlg;
        int             rc;

        char    szFullName[256];
        char    szErrTxt[128];

        // read settings from dialog
        Reg.dwNumberOfDeliveryThreads  = GetDlgItemInt(hwnd,
ED_THREADS, &d, FALSE);
        Reg.dwMaxConnections = GetDlgItemInt(hwnd,
ED_MAXCONNECTION, &d, FALSE);
        Reg.dwMaxPendingDeliveries = GetDlgItemInt(hwnd,
ED_MAXDELIVERIES, &d, FALSE);

        GetDlgItemText(hwnd, ED_DB_SERVER,
Reg.szDbServer, sizeof(Reg.szDbServer));
        GetDlgItemText(hwnd, ED_DB_USER_ID, Reg.szDbUser,
sizeof(Reg.szDbUser));
        GetDlgItemText(hwnd, ED_DB_PASSWORD,
Reg.szDbPassword, sizeof(Reg.szDbPassword));
        GetDlgItemText(hwnd, ED_DB_NAME, Reg.szDbName,
sizeof(Reg.szDbName));


        if ( IsDlgButtonChecked(hwnd, IDC_DBLIB) )
        {
                Reg.eDB_Protocol = DBLIB;
                rc = 1;
        }
        else if ( IsDlgButtonChecked(hwnd, IDC_ODBC) )
        {
                Reg.eDB_Protocol = ODBC;
                rc = 2;
        }

        if ( IsDlgButtonChecked(hwnd, IDC_TM_NONE) )
```

```
                Reg.eTxnMon = None;
        else if ( IsDlgButtonChecked(hwnd, IDC_TM_TUXEDO) )
                Reg.eTxnMon = TUXEDO;
        else if ( IsDlgButtonChecked(hwnd, IDC_TM_MTS) )
                Reg.eTxnMon = COM;
        else if ( IsDlgButtonChecked(hwnd, IDC_TM_ENCINA) )
                Reg.eTxnMon = ENCINA;

        iPoolThreadLimit = GetDlgItemInt(hwnd,
ED_IIS_MAX_THEAD_POOL_LIMIT,&d, FALSE);
        iThreadTimeout = GetDlgItemInt(hwnd,
ED_IIS_THREAD_TIMEOUT,  &d, FALSE);
        iListenBackLog = GetDlgItemInt(hwnd,
ED_IIS_LISTEN_BACKLOG,&d, FALSE);
        iAcceptExOutstanding = GetDlgItemInt(hwnd,
ED_WEB_SERVICE_BACKLOG_QUEUE_SIZE,&d, FALSE);


        ShowWindow(hwnd, SW_HIDE);
        hDlg = CreateDialog(hInst,
MAKEINTRESOURCE(IDD_DIALOG3),hwnd, CopyDlgProc);
        ShowWindow(hDlg, SW_SHOWNA);
        UpdateDialog(hDlg);


        // write binaries to inetpub\wwwroot
        rc = CopyFiles(hDlg, szDllPath);
        if ( !rc )
        {
                ShowWindow(hwnd, SW_SHOWNA);
                DestroyWindow(hDlg);
                strcpy( szErrTxt, "Error(s) occured when
creating " );
                strcat( szErrTxt, szLastFileName );
                MessageBox(hwnd, szErrTxt, NULL,
MB_ICONSTOP | MB_OK);
                EndDialog(hwnd, 0);
                return;
        }

        // update registry
        SetDlgItemText(hDlg, IDC_STATUS, "Updating
Registry.");
        SendDlgItemMessage(hDlg, IDC_PROGRESS1,
PBM_STEPIT, 0, 0);
        UpdateDialog(hDlg);
        WriteRegistrySettings(szDllPath);

        // register com proxy stub
        strcpy(szFullName, szDllPath);
        strcat(szFullName, "tpcc_com_ps.dll");
        if (!RegisterDLL(szFullName))
        {
                ShowWindow(hwnd, SW_SHOWNA);
                DestroyWindow(hDlg);
                strcpy( szErrTxt, "Error occured when
registering " );
                strcat( szErrTxt, szFullName );
                MessageBox(hwnd, szErrTxt, NULL,
MB_ICONSTOP | MB_OK);
                EndDialog(hwnd, 0);
                return;
        }
        // register remote com proxy stub
        strcpy(szFullName, szDllPath);
        strcat(szFullName, "tpcc_com_remote_ps.dll");
        if (!RegisterDLL(szFullName))
        {
                ShowWindow(hwnd, SW_SHOWNA);
                DestroyWindow(hDlg);
                strcpy( szErrTxt, "Error occured when
registering " );
                strcat( szErrTxt, szFullName );
                MessageBox(hwnd, szErrTxt, NULL,
MB_ICONSTOP | MB_OK);
                EndDialog(hwnd, 0);
                return;
        }


        // if using COM
        if (Reg.eTxnMon == COM)
        {
                SetDlgItemText(hDlg, IDC_STATUS,
"Configuring COM.");
                SendDlgItemMessage(hDlg, IDC_PROGRESS1,
PBM_STEPIT, 0, 0);
                UpdateDialog(hDlg);

                if (install_com(szDllPath))
                {
                        ShowWindow(hwnd,
SW_SHOWNA);
                        DestroyWindow(hDlg);
                        strcpy( szErrTxt, "Error occured
when configuring COM settings." );
                        MessageBox(hwnd, szErrTxt, NULL,
MB_ICONSTOP | MB_OK);
                        EndDialog(hwnd, 0);
                        return;
                }
        }

        Sleep(100);

        ShowWindow(hwnd, SW_SHOWNA);
        DestroyWindow(hDlg);

        EndDialog(hwnd, rc);
        return;
}

static void ReadRegistrySettings(void)
{
        HKEY    hKey;
        DWORD   size;
        DWORD   type;

        if ( RegOpenKeyEx(HKEY_LOCAL_MACHINE,
"SYSTEM\\CurrentControlSet\\Services\\Inetinfo\\Parameters",0,
KEY_READ, &hKey) == ERROR_SUCCESS )
        {
                size = sizeof(iPoolThreadLimit);
                if ( RegQueryValueEx(hKey,
"PoolThreadLimit", 0, &type, (char *)&iPoolThreadLimit, &size) ==
ERROR_SUCCESS )
                        if ( !iPoolThreadLimit )
                                iPoolThreadLimit =
iMaxPhysicalMemory * 2;

                size = sizeof(iThreadTimeout);
                if ( RegQueryValueEx(hKey, "ThreadTimeout",
0, &type, (char *)&iThreadTimeout, &size) == ERROR_SUCCESS )
                        if ( !iThreadTimeout )
                                iThreadTimeout = 86400;
```

```
                        size = sizeof(iListenBackLog);
                        if ( RegQueryValueEx(hKey, "ListenBackLog",
0, &type, (char *)&iListenBackLog, &size) == ERROR_SUCCESS )
                                if ( !iListenBackLog )
                                        iListenBackLog = 150;

                        RegCloseKey(hKey);
        }

        if ( RegOpenKeyEx(HKEY_LOCAL_MACHINE,
"SYSTEM\\CurrentControlSet\\Services\\W3SVC\\Parameters",0,
KEY_READ, &hKey) == ERROR_SUCCESS )
        {
                        size = sizeof(iAcceptExOutstanding);
                        if ( RegQueryValueEx(hKey,
"AcceptExOutstanding", 0, &type, (char *)&iAcceptExOutstanding,
&size) == ERROR_SUCCESS )
                                if ( !iAcceptExOutstanding )
                                        iAcceptExOutstanding =
40;

                        RegCloseKey(hKey);
        }
}

static void WriteRegistrySettings(char *szDllPath)
{
        HKEY    hKey;
        DWORD   dwDisposition;
        char    szTmp[256];
        char    *ptr;
        int             iRc;

        if ( RegCreateKeyEx(HKEY_LOCAL_MACHINE,
"SOFTWARE\\Microsoft\\TPCC",0, NULL,
REG_OPTION_NON_VOLATILE,KEY_ALL_ACCESS, NULL,
&hKey, &dwDisposition) == ERROR_SUCCESS )
        {
                        strcpy(szTmp, szDllPath);
                        ptr = strstr(szTmp, "tpcc");
                        if ( ptr )
                                *ptr = 0;

                        RegSetValueEx(hKey, "Path", 0, REG_SZ,
szTmp, strlen(szTmp)+1);

                        RegSetValueEx(hKey,
"NumberOfDeliveryThreads", 0, REG_DWORD, (char
*)&Reg.dwNumberOfDeliveryThreads,
sizeof(Reg.dwNumberOfDeliveryThreads));
                        RegSetValueEx(hKey, "MaxConnections", 0,
REG_DWORD, (char *)&Reg.dwMaxConnections,
sizeof(Reg.dwMaxConnections));
                        RegSetValueEx(hKey, "MaxPendingDeliveries",
0, REG_DWORD, (char *)&Reg.dwMaxPendingDeliveries,
sizeof(Reg.dwMaxPendingDeliveries));

                        RegSetValueEx(hKey, "DB_Protocol", 0,
REG_SZ, szDBNames[Reg.eDB_Protocol],
strlen(szDBNames[Reg.eDB_Protocol])+1);
                        RegSetValueEx(hKey, "TxnMonitor", 0,
REG_SZ, szTxnMonNames[Reg.eTxnMon],
strlen(szTxnMonNames[Reg.eTxnMon])+1);

                        RegSetValueEx(hKey, "DbServer", 0, REG_SZ,
Reg.szDbServer, strlen(Reg.szDbServer)+1);
                        RegSetValueEx(hKey, "DbName", 0, REG_SZ,
Reg.szDbName, strlen(Reg.szDbName)+1);
                        RegSetValueEx(hKey, "DbUser", 0, REG_SZ,
Reg.szDbUser, strlen(Reg.szDbUser)+1);
                        RegSetValueEx(hKey, "DbPassword", 0,
REG_SZ, Reg.szDbPassword, strlen(Reg.szDbPassword)+1);


                        strcpy(szTmp, "YES");
                        RegSetValueEx(hKey, "COM_SinglePool", 0,
REG_SZ, szTmp, strlen(szTmp)+1);

                        RegFlushKey(hKey);
                        RegCloseKey(hKey);
        }

        if ( (iRc=RegCreateKeyEx(HKEY_LOCAL_MACHINE,
"SYSTEM\\CurrentControlSet\\Services\\Inetinfo\\Parameters",0,
NULL, REG_OPTION_NON_VOLATILE,KEY_ALL_ACCESS,
NULL, &hKey, &dwDisposition)) == ERROR_SUCCESS )
        {
                        RegSetValueEx(hKey, "PoolThreadLimit", 0,
REG_DWORD, (char *)&iPoolThreadLimit,
sizeof(iPoolThreadLimit));
                        RegSetValueEx(hKey, "ThreadTimeout", 0,
REG_DWORD, (char *)&iThreadTimeout, sizeof(iThreadTimeout));
                        RegSetValueEx(hKey, "ListenBackLog", 0,
REG_DWORD, (char *)&iListenBackLog, sizeof(iListenBackLog));

                        RegFlushKey(hKey);
                        RegCloseKey(hKey);
        }

        if ( (iRc=RegCreateKeyEx(HKEY_LOCAL_MACHINE,
"SYSTEM\\CurrentControlSet\\Services\\W3SVC\\Parameters",0,
NULL, REG_OPTION_NON_VOLATILE,KEY_ALL_ACCESS,
NULL, &hKey, &dwDisposition)) == ERROR_SUCCESS )
        {
                        RegSetValueEx(hKey, "AcceptExOutstanding",
0, REG_DWORD, (char *)&iAcceptExOutstanding,
sizeof(iAcceptExOutstanding));

                        RegFlushKey(hKey);
                        RegCloseKey(hKey);
        }

        return;
}

BOOL CALLBACK CopyDlgProc(HWND hwnd, UINT uMsg,
WPARAM wParam, LPARAM lParam)
{
        if ( uMsg == WM_INITDIALOG)
        {
                        SendDlgItemMessage(hwnd,
IDC_PROGRESS1, PBM_SETRANGE, 0, MAKELPARAM(0, 15));
                        SendDlgItemMessage(hwnd,
IDC_PROGRESS1, PBM_SETSTEP, (WPARAM)1, 0);
                        return TRUE;
        }
        return FALSE;
}

BOOL RegisterDLL(char *szFileName)
{
        HINSTANCE       hLib;
        FARPROC                 lpDllEntryPoint;

        hLib = LoadLibrary(szFileName);
        if ( hLib == NULL )
```

```
                return FALSE;
        // Find the entry point.
        lpDllEntryPoint = GetProcAddress(hLib,
"DllRegisterServer");
        if (lpDllEntryPoint != NULL)
        {
                return ((*lpDllEntryPoint)() == S_OK);
        }
        else
                return FALSE;           //unable to locate entry
point
}

BOOL FileFromResource( char *szResourceName, int iResourceId,
char *szDllPath, char *szFileName )
{
        HGLOBAL                         hDLL;
        HRSRC                   hResInfo;
        HANDLE                  hFile;
        DWORD                   dwSize;
        BYTE                    *pSrc;
        DWORD                   d;
        char                    szFullName[256];

        hResInfo = FindResource(hInst,
MAKEINTRESOURCE(iResourceId), szResourceName);

        strcpy(szFullName, szDllPath);
        strcat(szFullName, szFileName);

        dwSize = SizeofResource(hInst, hResInfo);
        hDLL = LoadResource(hInst, hResInfo );
        pSrc = (BYTE *)LockResource(hDLL);
        remove(szFullName);

        if ( !(hFile = CreateFile(szFullName, GENERIC_WRITE, 0,
NULL, CREATE_ALWAYS, FILE_ATTRIBUTE_NORMAL,
NULL)) )
                return FALSE;

        if ( !WriteFile(hFile, pSrc, dwSize, &d, NULL) )
                return FALSE;

        CloseHandle(hFile);

        UnlockResource(hDLL);
        FreeResource(hDLL);
        return TRUE;
}

static int CopyFiles(HWND hDlg, char *szDllPath)
{
        BOOL            bSvcRunning;

        bSvcRunning = CheckWWWebService();
        if ( bSvcRunning )
        {
                SetDlgItemText(hDlg, IDC_STATUS, "Stopping
Web Service.");
                SendDlgItemMessage(hDlg, IDC_PROGRESS1,
PBM_STEPIT, 0, 0);
                UpdateDialog(hDlg);

                StopWWWebService();
                SendDlgItemMessage(hDlg, IDC_PROGRESS1,
PBM_STEPIT, 0, 0);
                UpdateDialog(hDlg);
        }

        SetDlgItemText(hDlg, IDC_STATUS, "Copying Files...");
        SendDlgItemMessage(hDlg, IDC_PROGRESS1,
PBM_STEPIT, 0, 0);
        UpdateDialog(hDlg);

        // install TPCC.DLL
        strcpy( szLastFileName, "tpcc.dll" );
        if (!FileFromResource( "TPCCDLL", IDR_TPCCDLL,
szDllPath, szLastFileName ))
                return 0;
        SendDlgItemMessage(hDlg, IDC_PROGRESS1,
PBM_STEPIT, 0, 0);
        UpdateDialog(hDlg);

        // install tpcc_dblib.dll
        strcpy( szLastFileName, "tpcc_dblib.dll" );
        if (!FileFromResource( "DBLIB_DLL", IDR_DBLIB_DLL,
szDllPath, szLastFileName ))
                return 0;
        SendDlgItemMessage(hDlg, IDC_PROGRESS1,
PBM_STEPIT, 0, 0);
        UpdateDialog(hDlg);

        // install tpcc_odbc.dll
        strcpy( szLastFileName, "tpcc_odbc.dll" );
        if (!FileFromResource( "ODBC_DLL", IDR_ODBC_DLL,
szDllPath, szLastFileName ))
                return 0;
        SendDlgItemMessage(hDlg, IDC_PROGRESS1,
PBM_STEPIT, 0, 0);
        UpdateDialog(hDlg);
/*
        // install tuxapp.exe
        strcpy( szLastFileName, "tuxapp.exe" );
        if (!FileFromResource( "TUXEDO_APP",
IDR_TUXEDO_APP, szDllPath, szLastFileName ))
                return 0;
        SendDlgItemMessage(hDlg, IDC_PROGRESS1,
PBM_STEPIT, 0, 0);
        UpdateDialog(hDlg);

        // install tpcc_tuxedo.dll
        strcpy( szLastFileName, "tpcc_tuxedo.dll" );
        if (!FileFromResource( "TUXEDO_DLL",
IDR_TUXEDO_DLL, szDllPath, szLastFileName ))
                return 0;
        SendDlgItemMessage(hDlg, IDC_PROGRESS1,
PBM_STEPIT, 0, 0);
        UpdateDialog(hDlg);
*/
        // install tpcc_com.dll
        strcpy( szLastFileName, "tpcc_com.dll" );
        if (!FileFromResource( "COM_DLL", IDR_COM_DLL,
szDllPath, szLastFileName ))
                return 0;
        SendDlgItemMessage(hDlg, IDC_PROGRESS1,
PBM_STEPIT, 0, 0);
        UpdateDialog(hDlg);

        // install tpcc_com_all.tlb
        strcpy( szLastFileName, "tpcc_com_all.tlb" );
        if (!FileFromResource( "COM_TYPLIB",
IDR_COMTYPLIB_DLL, szDllPath, szLastFileName ))
                return 0;
        SendDlgItemMessage(hDlg, IDC_PROGRESS1,
PBM_STEPIT, 0, 0);
        UpdateDialog(hDlg);
```

```
        // install tpcc_com_ps.dll
        strcpy( szLastFileName, "tpcc_com_ps.dll" );
        if (!FileFromResource( "COM_PS_DLL",
IDR_COMPS_DLL, szDllPath, szLastFileName ))
                return 0;
        SendDlgItemMessage(hDlg, IDC_PROGRESS1,
PBM_STEPIT, 0, 0);
        UpdateDialog(hDlg);

        // install tpcc_com_all.dll
        strcpy( szLastFileName, "tpcc_com_all.dll" );
        if (!FileFromResource( "COM_ALL_DLL",
IDR_COMALL_DLL, szDllPath, szLastFileName ))
                return 0;
        SendDlgItemMessage(hDlg, IDC_PROGRESS1,
PBM_STEPIT, 0, 0);
        UpdateDialog(hDlg);

        // install tpcc_com_remote.tlb
        strcpy( szLastFileName, "tpcc_com_remote.tlb" );
        if (!FileFromResource( "COM_REMTYPLIB",
IDR_COMREMTYPLIB_DLL, szDllPath, szLastFileName ))
                return 0;
        SendDlgItemMessage(hDlg, IDC_PROGRESS1,
PBM_STEPIT, 0, 0);
        UpdateDialog(hDlg);

        // install tpcc_com_remote_ps.dll
        strcpy( szLastFileName, "tpcc_com_remote_ps.dll" );
        if (!FileFromResource( "COM_REMPS_DLL",
IDR_COMREMPS_DLL, szDllPath, szLastFileName ))
                return 0;
        SendDlgItemMessage(hDlg, IDC_PROGRESS1,
PBM_STEPIT, 0, 0);
        UpdateDialog(hDlg);

        // install tpcc_com_remote.dll
        strcpy( szLastFileName, "tpcc_com_remote.dll" );
        if (!FileFromResource( "COM_REMOTE_DLL",
IDR_REMOTE_DLL, szDllPath, szLastFileName ))
                return 0;
        SendDlgItemMessage(hDlg, IDC_PROGRESS1,
PBM_STEPIT, 0, 0);
        UpdateDialog(hDlg);


        //if we stopped service restart it.
        if ( bSvcRunning )
        {
                SetDlgItemText(hDlg, IDC_STATUS, "Starting
Web Service.");
                SendDlgItemMessage(hDlg, IDC_PROGRESS1,
PBM_STEPIT, 0, 0);
                UpdateDialog(hDlg);
                StartWWWebService();
        }

        SendDlgItemMessage(hDlg, IDC_PROGRESS1,
PBM_STEPIT, 0, 0);
        UpdateDialog(hDlg);

        return 1;
}

static BOOL GetInstallPath(char *szDllPath)
{
  HKEY  hKey;
        BYTE    szData[256];
        DWORD   sv;
        BOOL    bRc;
        int             len;
        char    *ptr;
        int             iRc;

        szDllPath[0] =  0;
        bRc = TRUE;
        if ( RegOpenKeyEx(HKEY_LOCAL_MACHINE,
"SYSTEM\\CurrentControlSet\\Services\\W3SVC\\Parameters\\Virtual
Roots", 0, KEY_ALL_ACCESS, &hKey) == ERROR_SUCCESS )
        {
                sv = sizeof(szData);
                iRc = RegQueryValueEx( hKey, "/,", NULL,
NULL, szData, &sv );  // used by IIS 3.0
                if (iRc == ERROR_FILE_NOT_FOUND)
                        iRc = RegQueryValueEx( hKey, "/",
NULL, NULL, szData, &sv );   // used by IIS 4.0
                if (iRc == ERROR_SUCCESS)
                {
                        bRc = FALSE;
                        strcpy(szDllPath, szData);
                        if ( (ptr = strchr(szDllPath, ',')) )
                                *ptr = 0;

                        len = strlen(szDllPath);
                        if ( szDllPath[len-1] != '\\' )
                        {
                                szDllPath[len] = '\\';
                                szDllPath[len+1] = 0;
                        }
                }

                RegCloseKey(hKey);
        }

        return bRc;
}

static void GetVersionInfo(char *szDLLPath, char *szExePath)
{
        DWORD                                   d;
        DWORD                                   dwSize;
        DWORD                                   dwBytes;
        char                                    *ptr;
        VS_FIXEDFILEINFO*vs;

        versionDllMS = 0;
        versionDllLS = 0;
        if ( _access(szDLLPath, 00) == 0 )
        {
                dwSize = GetFileVersionInfoSize(szDLLPath,
&d);
                if ( dwSize )
                {
                        ptr = (char *)malloc(dwSize);
                        GetFileVersionInfo(szDLLPath, 0,
dwSize, ptr);
                        VerQueryValue(ptr, "\\",&vs,
&dwBytes);
                        versionDllMS =
vs->dwProductVersionMS;
                        versionDllLS =
vs->dwProductVersionLS;
                        free(ptr);
                }
        }
```

```
	versionExeMS = 0x7FFF;
	versionExeLS = 0x7FFF;
	dwSize = GetFileVersionInfoSize(szExePath, &d);
	if ( dwSize )
	{
		ptr = (char *)malloc(dwSize);
		GetFileVersionInfo(szExePath, 0, dwSize, ptr);
		VerQueryValue(ptr, "\\",&vs, &dwBytes);

		versionExeMS = vs->dwProductVersionMS;
		versionExeLS =
LOWORD(vs->dwProductVersionLS);
		versionExeMM =
HIWORD(vs->dwProductVersionLS);
		free(ptr);
	}
	return;
}

static BOOL CheckWWWebService(void)
{
	SC_HANDLE		schSCManager;
	SC_HANDLE		schService;
	SERVICE_STATUS  ssStatus;

	schSCManager = OpenSCManager(NULL, NULL,
SC_MANAGER_ALL_ACCESS);
	schService = OpenService(schSCManager,
TEXT("W3SVC"), SERVICE_ALL_ACCESS);
	if (schService == NULL)
		return FALSE;

	if (! QueryServiceStatus(schService, &ssStatus) )
		goto ServiceNotRunning;

	if ( !ControlService(schService,
SERVICE_CONTROL_STOP, &ssStatus) )
		goto ServiceNotRunning;
	//start Service pending, Check the status until the service is
running.
	if (! QueryServiceStatus(schService, &ssStatus) )
		goto ServiceNotRunning;

	CloseServiceHandle(schService);
	return TRUE;

ServiceNotRunning:

	CloseServiceHandle(schService);
	return FALSE;
}

static BOOL StartWWWebService(void)
{
	SC_HANDLE		schSCManager;
	SC_HANDLE		schService;
	SERVICE_STATUS  ssStatus;
	DWORD		dwOldCheckPoint;

	schSCManager = OpenSCManager(NULL, NULL,
SC_MANAGER_ALL_ACCESS);
	schService = OpenService(schSCManager,
TEXT("W3SVC"), SERVICE_ALL_ACCESS);
	if (schService == NULL)
		return FALSE;

	if (! StartService(schService, 0, NULL) )
		goto StartWWWebErr;
	//start Service pending, Check the status until the service is
running.
	if (! QueryServiceStatus(schService, &ssStatus) )
		goto StartWWWebErr;
	while( ssStatus.dwCurrentState != SERVICE_RUNNING)
	{

		dwOldCheckPoint = ssStatus.dwCheckPoint;
		//Save the current checkpoint.
		Sleep(ssStatus.dwWaitHint);
					//Wait for the specified
interval.
		if ( !QueryServiceStatus(schService, &ssStatus) )
//Check the status again.
					break;
		if (dwOldCheckPoint >=
ssStatus.dwCheckPoint)		//Break if the checkpoint
has not been incremented.
					break;
	}

	if (ssStatus.dwCurrentState == SERVICE_RUNNING)
		goto StartWWWebErr;

	CloseServiceHandle(schService);
	return TRUE;

StartWWWebErr:
	CloseServiceHandle(schService);
	return FALSE;
}

static BOOL StopWWWebService(void)
{
	SC_HANDLE		schSCManager;
	SC_HANDLE		schService;
	SERVICE_STATUS  ssStatus;
	DWORD		dwOldCheckPoint;

	schSCManager = OpenSCManager(NULL, NULL,
SC_MANAGER_ALL_ACCESS);
	schService = OpenService(schSCManager,
TEXT("W3SVC"), SERVICE_ALL_ACCESS);
	if (schService == NULL)
		return FALSE;

	if (! QueryServiceStatus(schService, &ssStatus) )
		goto StopWWWebErr;

	if ( !ControlService(schService,
SERVICE_CONTROL_STOP, &ssStatus) )
		goto StopWWWebErr;
	//start Service pending, Check the status until the service is
running.
	if (! QueryServiceStatus(schService, &ssStatus) )
		goto StopWWWebErr;
	while( ssStatus.dwCurrentState == SERVICE_RUNNING)
	{

		dwOldCheckPoint = ssStatus.dwCheckPoint;
		//Save the current checkpoint.
		Sleep(ssStatus.dwWaitHint);
					//Wait for the specified
interval.
		if ( !QueryServiceStatus(schService, &ssStatus) )
//Check the status again.
					break;
```

```
                        if (dwOldCheckPoint >=
ssStatus.dwCheckPoint)                  //Break if the checkpoint
has not been incremented.
                                break;
        }

        if (ssStatus.dwCurrentState == SERVICE_RUNNING)
                goto StopWWWebErr;

        CloseServiceHandle(schService);
        return TRUE;

StopWWWebErr:
        CloseServiceHandle(schService);
        return FALSE;
}

static void UpdateDialog(HWND hDlg)
{
        MSG msg;

        UpdateWindow(hDlg);
        while( PeekMessage(&msg, hDlg, 0, 0, PM_REMOVE) )
        {
                TranslateMessage(&msg);
                DispatchMessage(&msg);
        }
        Sleep(250);
        return;
}
```

install.h

```
//{{NO_DEPENDENCIES}}
// Microsoft Developer Studio generated include file.
// Used by install.rc
//

#define IDD_DIALOG1                     101
#define IDI_ICON1                       102
#define IDR_TPCCDLL                     103
#define IDD_DIALOG2                     105
#define IDI_ICON2                       106
#define IDR_DELIVERY                    107
#define IDD_DIALOG3                     108

#define BN_LOG                          1001
#define ED_KEEP                         1002
#define ED_THREADS                      1003
#define ED_THREADS2                     1004
#define IDC_PATH                        1007
#define IDC_VERSION                     1009
#define IDC_RESULTS                     1010
#define IDC_PROGRESS1                   1011
#define IDC_STATUS                      1012
#define IDC_BUTTON1                     1013
#define ED_MAXCONNECTION                1014
#define ED_IIS_MAX_THEAD_POOL_LIMIT             1015
#define ED_WEB_SERVICE_BACKLOG_QUEUE_SIZE
1017
#define ED_IIS_THREAD_TIMEOUT                   1018
#define ED_IIS_LISTEN_BACKLOG                   1019
#define IDC_DBLIB                       1021
#define IDC_ODBC                        1022
#define IDC_CONNECT_POOL
1023
#define ED_USER_CONNECT_DELAY_TIME
1024

// Next default values for new objects
//
```

install.rc

```
//Microsoft Developer Studio generated resource script.
//
#include "resource.h"

#define APSTUDIO_READONLY_SYMBOLS
//////////////////////////////////////////////////////////////////////
//
// Generated from the TEXTINCLUDE 2 resource.
//
#include "afxres.h"

//////////////////////////////////////////////////////////////////////
#undef APSTUDIO_READONLY_SYMBOLS

//////////////////////////////////////////////////////////////////////
// English (U.S.) resources

#if !defined(AFX_RESOURCE_DLL) || defined(AFX_TARG_ENU)
#ifdef _WIN32
LANGUAGE LANG_ENGLISH, SUBLANG_ENGLISH_US
#pragma code_page(1252)
#endif //_WIN32

//////////////////////////////////////////////////////////////////////
//
// Dialog
//

IDD_DIALOG1 DIALOGEX 0, 0, 367, 255
STYLE DS_MODALFRAME | DS_CENTER | WS_MINIMIZEBOX |
WS_POPUP | WS_CAPTION |
    WS_VSCROLL | WS_SYSMENU
CAPTION "TPC-C Web Client Installation Utility"
FONT 8, "MS Sans Serif"
BEGIN
    EDITTEXT        ED_THREADS,134,36,34,12,ES_RIGHT |
ES_NUMBER,
                WS_EX_RTLREADING
    EDITTEXT        ED_MAXDELIVERIES,134,53,34,12,ES_RIGHT |
ES_NUMBER,
                WS_EX_RTLREADING
    EDITTEXT
ED_MAXCONNECTION,134,67,34,12,ES_RIGHT | ES_NUMBER,
                WS_EX_RTLREADING
    CONTROL
"None",IDC_TM_NONE,"Button",BS_AUTORADIOBUTTON|
                WS_GROUP | WS_TABSTOP,43,100,33,10
    CONTROL
"COM",IDC_TM_MTS,"Button",BS_AUTORADIOBUTTON|
                WS_TABSTOP,43,113,32,10
    CONTROL

"TUXEDO",IDC_TM_TUXEDO,"Button",BS_AUTORADIOBUTTO
N |
                WS_TABSTOP,106,100,46,10
    CONTROL
"ENCINA",IDC_TM_ENCINA,"Button",BS_AUTORADIOBUTTON
|
```

```
            WS_DISABLED | WS_TABSTOP,106,113,43,10
    EDITTEXT
ED_DB_SERVER,270,89,67,12,ES_AUTOHSCROLL
    EDITTEXT
ED_DB_USER_ID,270,103,67,12,ES_AUTOHSCROLL
    EDITTEXT
ED_DB_PASSWORD,270,114,67,12,ES_AUTOHSCROLL
    EDITTEXT
ED_DB_NAME,270,127,67,12,ES_AUTOHSCROLL
    CONTROL
"DBLIB",IDC_DBLIB,"Button",BS_AUTORADIOBUTTON|
WS_GROUP |
            WS_TABSTOP,214,164,39,12
    CONTROL
"ODBC",IDC_ODBC,"Button",BS_AUTORADIOBUTTON |
WS_TABSTOP,
            259,164,39,12
    EDITTEXT
ED_IIS_MAX_THEAD_POOL_LIMIT,127,148,41,12,ES_RIGHT|
            ES_NUMBER,WS_EX_RTLREADING
    EDITTEXT

ED_WEB_SERVICE_BACKLOG_QUEUE_SIZE,127,162,41,12,ES_
RIGHT |
            ES_NUMBER,WS_EX_RTLREADING
    EDITTEXT
ED_IIS_THREAD_TIMEOUT,127,178,41,12,ES_RIGHT|
ES_NUMBER,
            WS_EX_RTLREADING
    EDITTEXT
ED_IIS_LISTEN_BACKLOG,127,193,41,12,ES_RIGHT|
ES_NUMBER,
            WS_EX_RTLREADING
    DEFPUSHBUTTON   "OK",IDOK,115,233,50,14
    PUSHBUTTON      "Cancel",IDCANCEL,181,233,50,14
    EDITTEXT        IDC_PATH,76,20,92,13,ES_AUTOHSCROLL |
ES_READONLY
    LTEXT           "Number of Delivery
Threads:",IDC_STATIC,29,39,93,8
    LTEXT           "Max Number of
Connections:",IDC_STATIC,29,67,93,8
    RTEXT           "Version 4.22",IDC_VERSION,302,4,45,9
    LTEXT           "IIS Max Thread Pool
Limit:",IDC_STATIC,36,148,86,12
    LTEXT           "Web Service Backlog Queue
Size:",IDC_STATIC,35,159,76,
            15
    LTEXT           "IIS Thread Timeout
(seconds):",IDC_STATIC,36,177,83,17
    LTEXT           "IIS Listen Backlog:",IDC_STATIC,35,196,73,10
    GROUPBOX        "Database
Interface",IDC_STATIC,192,151,146,27,WS_GROUP
    LTEXT           "Installation directory:",IDC_STATIC,29,20,39,16
    GROUPBOX        "Transaction
Monitor",IDC_STATIC,22,90,146,37
    LTEXT           "Server Name:",IDC_STATIC,200,92,56,8
    LTEXT           "User ID:",IDC_STATIC,200,105,60,8
    LTEXT           "User Password:",IDC_STATIC,200,119,57,8
    LTEXT           "Database Name:",IDC_STATIC,200,130,54,8
    GROUPBOX        "SQL Server Connection
Properties",IDC_STATIC,192,69,150,
            116
    GROUPBOX        "Web Client
Properties",IDC_STATIC,22,11,146,116
    GROUPBOX        "IIS Settings",IDC_STATIC,22,132,146,79
    LTEXT           "Max Pending Deliveries:",IDC_STATIC,29,53,80,8
END

IDD_DIALOG2 DIALOGEX 0, 0, 117, 62
STYLE DS_SETFOREGROUND | DS_3DLOOK | DS_CENTER |
WS_POPUP | WS_BORDER
EXSTYLE WS_EX_STATICEDGE
FONT 12, "MS Sans Serif", 0, 0, 0x1
BEGIN
    DEFPUSHBUTTON   "OK",IDOK,33,45,50,9
    CTEXT           "HTML TPC-C Installation
Successfull",IDC_RESULTS,7,22,
            102,18,0,WS_EX_CLIENTEDGE
    ICON
IDI_ICON2,IDC_STATIC,50,7,18,20,SS_REALSIZEIMAGE,
            WS_EX_TRANSPARENT
END

IDD_DIALOG3 DIALOG DISCARDABLE  0, 0, 91, 40
STYLE DS_SYSMODAL | DS_MODALFRAME | DS_3DLOOK |
DS_CENTER | WS_CAPTION
CAPTION "Installing TPC-C Web Client"
FONT 12, "Arial Black"
BEGIN
    CONTROL
"Progress1",IDC_PROGRESS1,"msctls_progress32",WS_BORDER,
            7,20,77,13
    CTEXT           "Static",IDC_STATUS,7,7,77,12,SS_SUNKEN
END

IDD_DIALOG4 DIALOG DISCARDABLE  0, 0, 291, 202
STYLE DS_MODALFRAME | DS_CENTER | WS_POPUP |
WS_CAPTION | WS_SYSMENU
CAPTION "Client End User License"
FONT 8, "MS Sans Serif"
BEGIN
    EDITTEXT        IDC_LICENSE,7,7,271,167,ES_MULTILINE|
ES_AUTOVSCROLL |
            ES_AUTOHSCROLL | ES_READONLY |
WS_VSCROLL | WS_HSCROLL
    DEFPUSHBUTTON   "I &Agree",IDOK,87,181,50,14
    PUSHBUTTON      "&Cancel",IDCANCEL,153,181,50,14
END


/////////////////////////////////////////////////////////////////////////////
//
// DESIGNINFO
//

#ifdef APSTUDIO_INVOKED
GUIDELINES DESIGNINFO DISCARDABLE
BEGIN
    IDD_DIALOG1, DIALOG
    BEGIN
        LEFTMARGIN, 22
        RIGHTMARGIN, 347
        VERTGUIDE, 29
        VERTGUIDE, 168
        VERTGUIDE, 179
        VERTGUIDE, 342
        TOPMARGIN, 4
        BOTTOMMARGIN, 249
    END

    IDD_DIALOG2, DIALOG
    BEGIN
        LEFTMARGIN, 7
        RIGHTMARGIN, 109
        TOPMARGIN, 7
        BOTTOMMARGIN, 54
```

```
    END

    IDD_DIALOG3, DIALOG
    BEGIN
        LEFTMARGIN, 7
        RIGHTMARGIN, 84
        TOPMARGIN, 7
        BOTTOMMARGIN, 33
    END

    IDD_DIALOG4, DIALOG
    BEGIN
        LEFTMARGIN, 7
        RIGHTMARGIN, 278
        TOPMARGIN, 7
        BOTTOMMARGIN, 195
    END
END
#endif    // APSTUDIO_INVOKED


#ifdef APSTUDIO_INVOKED
////////////////////////////////////////////////////////////////////////////
//
// TEXTINCLUDE
//

1 TEXTINCLUDE DISCARDABLE
BEGIN
    "resource.h\0"
END

2 TEXTINCLUDE DISCARDABLE
BEGIN
    "#include ""afxres.h""\r\n"
    "\0"
END

3 TEXTINCLUDE DISCARDABLE
BEGIN
    "\r\n"
    "\0"
END

#endif    // APSTUDIO_INVOKED


////////////////////////////////////////////////////////////////////////////
//
// Icon
//

// Icon with lowest ID value placed first to ensure application icon
// remains consistent on all systems.
IDI_ICON1               ICON    DISCARDABLE     "icon1.ico"
IDI_ICON2               ICON    DISCARDABLE     "icon2.ico"

////////////////////////////////////////////////////////////////////////////
//
// TPCCDLL
//

#ifdef _DEBUG
IDR_TPCCDLL             TPCCDLL DISCARDABLE
"..\\..\\isapi_dll\\bin\\debug\\tpcc.dll"
#else
IDR_TPCCDLL             TPCCDLL DISCARDABLE
"..\\..\\isapi_dll\\bin\\release\\tpcc.dll"
#endif

#ifndef _MAC
////////////////////////////////////////////////////////////////////////////
//
// Version
//

VS_VERSION_INFO VERSIONINFO
 FILEVERSION 0,4,22,0
 PRODUCTVERSION 0,4,22,0
 FILEFLAGSMASK 0x3fL
#ifdef _DEBUG
 FILEFLAGS 0x1L
#else
 FILEFLAGS 0x0L
#endif
 FILEOS 0x40004L
 FILETYPE 0x1L
 FILESUBTYPE 0x0L
BEGIN
    BLOCK "StringFileInfo"
    BEGIN
        BLOCK "040904b0"
        BEGIN
            VALUE "Comments", "TPC-C Web Client Installer\0"
            VALUE "CompanyName", "Microsoft\0"
            VALUE "FileDescription", "install\0"
            VALUE "FileVersion", "0, 4, 30, 0\0"
            VALUE "InternalName", "install\0"
            VALUE "LegalCopyright", "Copyright © 2001\0"
            VALUE "LegalTrademarks", "\0"
            VALUE "OriginalFilename", "install.exe\0"
            VALUE "PrivateBuild", "\0"
            VALUE "ProductName", "Microsoft install\0"
            VALUE "ProductVersion", "0, 4, 30, 0\0"
            VALUE "SpecialBuild", "\0"
        END
    END
    BLOCK "VarFileInfo"
    BEGIN
        VALUE "Translation", 0x409, 1200
    END
END

#endif    // !_MAC


////////////////////////////////////////////////////////////////////////////
//
// LICENSE
//

IDR_LICENSE1            LICENSE DISCARDABLE     "license.txt"

////////////////////////////////////////////////////////////////////////////
//
// DBLIB_DLL
//

#ifdef _DEBUG
IDR_DBLIB_DLL           DBLIB_DLL DISCARDABLE
"..\\..\\db_dblib_dll\\bin\\debug\\tpcc_dblib.dll"
#else
IDR_DBLIB_DLL           DBLIB_DLL DISCARDABLE
"..\\..\\db_dblib_dll\\bin\\release\\tpcc_dblib.dll"
#endif
```

```
/////////////////////////////////////////////////////////////////////////////
//
// ODBC_DLL
//

#ifdef _DEBUG
IDR_ODBC_DLL            ODBC_DLL DISCARDABLE
"..\\..\\db_odbc_dll\\bin\\debug\\tpcc_odbc.dll"
#else
IDR_ODBC_DLL            ODBC_DLL DISCARDABLE
"..\\..\\db_odbc_dll\\bin\\release\\tpcc_odbc.dll"
#endif

/////////////////////////////////////////////////////////////////////////////
//
// TUXEDO_APP
//

IDR_TUXEDO_APP          TUXEDO_APP DISCARDABLE
"..\\..\\tuxapp\\bin\\tuxapp.exe"

/////////////////////////////////////////////////////////////////////////////
//
// TUXEDO_DLL
//

IDR_TUXEDO_DLL          TUXEDO_DLL DISCARDABLE
"..\\..\\tm_tuxedo_dll\\bin\\tpcc_tuxedo.dll"

/////////////////////////////////////////////////////////////////////////////
//
// COM_DLL
//

#ifdef _DEBUG
IDR_COM_DLL             COM_DLL DISCARDABLE
"..\\..\\tm_com_dll\\bin\\debug\\tpcc_com.dll"
#else
IDR_COM_DLL             COM_DLL DISCARDABLE
"..\\..\\tm_com_dll\\bin\\release\\tpcc_com.dll"
#endif

/////////////////////////////////////////////////////////////////////////////
//
// COM_PS_DLL
//

#ifdef _DEBUG
IDR_COMPS_DLL           COM_PS_DLL DISCARDABLE
"..\\..\\tpcc_com_ps\\bin\\debug\\tpcc_com_ps.dll"
#else
IDR_COMPS_DLL           COM_PS_DLL DISCARDABLE
"..\\..\\tpcc_com_ps\\bin\\release\\tpcc_com_ps.dll"
#endif

/////////////////////////////////////////////////////////////////////////////
//
// COM_ALL_DLL
//

#ifdef _DEBUG
IDR_COMALL_DLL          COM_ALL_DLL DISCARDABLE
"..\\..\\tpcc_com_all\\bin\\debug\\tpcc_com_all.dll"
#else
IDR_COMALL_DLL          COM_ALL_DLL DISCARDABLE
"..\\..\\tpcc_com_all\\bin\\release\\tpcc_com_all.dll"
#endif

/////////////////////////////////////////////////////////////////////////////
//
// COM_TYPLIB
//

IDR_COMTYPLIB_DLL       COM_TYPLIB DISCARDABLE
"..\\..\\tpcc_com_all\\src\\tpcc_com_all.tlb"


/////////////////////////////////////////////////////////////////////////////
//
// COM_REMOTE_DLL
//

#ifdef _DEBUG
IDR_REMOTE_DLL          COM_REMOTE_DLL DISCARDABLE
"..\\..\\tpcc_com_remote\\bin\\debug\\tpcc_com_remote.dll"
#else
IDR_REMOTE_DLL          COM_REMOTE_DLL DISCARDABLE
"..\\..\\tpcc_com_remote\\bin\\release\\tpcc_com_remote.dll"
#endif

/////////////////////////////////////////////////////////////////////////////
//
// COM_REMTYPLIB
//

IDR_COMREMTYPLIB_DLL    COM_REMTYPLIB
DISCARDABLE "..\\..\\tpcc_com_remote\\src\\tpcc_com_remote.tlb"

/////////////////////////////////////////////////////////////////////////////
//
// COM_REMPS_DLL
//

#ifdef _DEBUG
IDR_COMREMPS_DLL        COM_REMPS_DLL DISCARDABLE
"..\\..\\tpcc_com_remote_ps\\bin\\debug\\tpcc_com_remote_ps.dll"
#else
IDR_COMREMPS_DLL        COM_REMPS_DLL DISCARDABLE
"..\\..\\tpcc_com_remote_ps\\bin\\release\\tpcc_com_remote_ps.dll"
#endif

#endif    // English (U.S.) resources
/////////////////////////////////////////////////////////////////////////////



#ifndef APSTUDIO_INVOKED
/////////////////////////////////////////////////////////////////////////////
//
// Generated from the TEXTINCLUDE 3 resource.
//


/////////////////////////////////////////////////////////////////////////////
#endif    // not APSTUDIO_INVOKED
```

install_com.cpp

```
/*            FILE:                    INSTALL_COM.CPP
 *                                                Microsoft TPC-C Kit Ver.
4.20.000
 *                                                Copyright Microsoft,
1999
 *            All Rights Reserved
```

```
 *
 *                                      not audited
 *
 *      PURPOSE:        installation code for COM
application for TPC-C Web Kit
 *      Contact:    Charles Levine (clevine@microsoft.com)
 *
 *  Change history:
 *                  4.20.000 - first version
 */

#define _WIN32_WINNT 0x0500

#include <comdef.h>
#include <comadmin.h>
#include <stdio.h>
#include <tchar.h>

extern "C"
{
        BOOL install_com(char *szDllPath);
}

BOOL install_com(char *szDllPath)
{
        ICOMAdminCatalog*       pCOMAdminCat =
NULL;
        ICatalogCollection*   pCatalogCollectionApp    = NULL;
        ICatalogCollection*   pCatalogCollectionCo     = NULL;
        ICatalogCollection*   pCatalogCollectionItf    = NULL;
        ICatalogCollection*   pCatalogCollectionMethod = NULL;

        ICatalogObject*         pCatalogObjectApp    =
NULL;
        ICatalogObject*         pCatalogObjectCo     =
NULL;
        ICatalogObject*         pCatalogObjectItf    =
NULL;
        ICatalogObject*         pCatalogObjectMethod =
NULL;

        _bstr_t                         bstrTemp,
bstrTemp2, bstrTemp3, bstrTemp4,

bstrTemp5, bstrTemp6, bstrTemp7;
        _bstr_t                         bstrDllPath =
szDllPath;
        _variant_t                      vTmp, vKey;
        long                            lActProp,
lCount, lCountCo, lCountItf, lCountMethod;
        bool                            bTmp;
        bool
bRemote=FALSE;

        CoInitializeEx(NULL, COINIT_MULTITHREADED);

        HRESULT hr =
CoCreateInstance(CLSID_COMAdminCatalog,

                NULL,

                CLSCTX_INPROC_SERVER,

                IID_ICOMAdminCatalog,

                (void**) &pCOMAdminCat);

        if (!SUCCEEDED(hr)) goto Error;

        bstrTemp = "Applications";

        // Attempt to connect to "Applications" in the Catalog
        hr = pCOMAdminCat->GetCollection(bstrTemp,

                (IDispatch**) &pCatalogCollectionApp);
        if (!SUCCEEDED(hr)) goto Error;

        // Attempt to load the "Applications" collection
        hr = pCatalogCollectionApp->Populate();
        if (!SUCCEEDED(hr)) goto Error;

        hr = pCatalogCollectionApp->get_Count(&lCount);
        if (!SUCCEEDED(hr)) goto Error;

        // iterate through applications to delete existing "TPC-C"
application (if any)
        while (lCount > 0)
        {
                hr = pCatalogCollectionApp->get_Item(lCount -
1, (IDispatch**) &pCatalogObjectApp);
                if (!SUCCEEDED(hr)) goto Error;

                hr = pCatalogObjectApp->get_Name(&vTmp);
                if (!SUCCEEDED(hr)) goto Error;

                if (wcscmp(vTmp.bstrVal, L"TPC-C"))
                {
                        lCount--;
                        continue;
                }
                else
                {
                        hr =
pCatalogCollectionApp->Remove(lCount - 1);
                        if (!SUCCEEDED(hr)) goto Error;
                        break;
                }
        }

        hr = pCatalogCollectionApp->SaveChanges(&lActProp);
        if (!SUCCEEDED(hr)) goto Error;

        // add the new application
        hr = pCatalogCollectionApp->Add((IDispatch**)
&pCatalogObjectApp);
        if (!SUCCEEDED(hr)) goto Error;

        // set properties
        bstrTemp = "Name";
        vTmp = "TPC-C";
        hr = pCatalogObjectApp->put_Value(bstrTemp, vTmp);
        if (!SUCCEEDED(hr)) goto Error;

        // set as a library (in process) application
        bstrTemp = "Activation";
        lActProp = COMAdminActivationInproc;
        vTmp = lActProp;
        hr = pCatalogObjectApp->put_Value(bstrTemp, vTmp);
        if (!SUCCEEDED(hr)) goto Error;

        // set security level to process
        bstrTemp = "AccessChecksLevel";
        lActProp = COMAdminAccessChecksApplicationLevel;
        vTmp = lActProp;
        hr = pCatalogObjectApp->put_Value(bstrTemp, vTmp);
        if (!SUCCEEDED(hr)) goto Error;
```

```
		// save key to get the Components collection later
		hr = pCatalogObjectApp->get_Key(&vKey);
		if (!SUCCEEDED(hr)) goto Error;

		// save changes (app creation) so component installation
will work
		hr = pCatalogCollectionApp->SaveChanges(&lActProp);
		if (!SUCCEEDED(hr)) goto Error;

		pCatalogObjectApp->Release();
		pCatalogObjectApp = NULL;

		bstrTemp  = "TPC-C";
// app name
		bstrTemp2 =		bstrDllPath + "tpcc_com_all.dll";
// DLL
		bstrTemp3 =		bstrDllPath + "tpcc_com_all.tlb";
							// type library
(TLB)
		bstrTemp4 =		bstrDllPath + "tpcc_com_ps.dll";
// proxy/stub dll	bstrTemp2 =		bstrDllPath +
"tpcc_com_all.dll";		// DLL
		bstrTemp5 = bstrDllPath + "tpcc_com_remote.dll";
		bstrTemp6 = bstrDllPath + "tpcc_com_remote.tlb";
		bstrTemp7 = bstrDllPath + "tpcc_com_remote_ps.dll";

		hr = pCOMAdminCat->InstallComponent(bstrTemp,

							bstrTemp2,

							bstrTemp3,

							bstrTemp4);
		if (!SUCCEEDED(hr)) goto Error;

		hr = pCOMAdminCat->InstallComponent(bstrTemp,

							bstrTemp5,

							bstrTemp6,

							bstrTemp7);
		if (!SUCCEEDED(hr)) goto Error;

		bstrTemp = "Components";
		hr = pCatalogCollectionApp->GetCollection(bstrTemp,
vKey, (IDispatch**) &pCatalogCollectionCo);
		if (!SUCCEEDED(hr)) goto Error;

		hr = pCatalogCollectionCo->Populate();
		if (!SUCCEEDED(hr)) goto Error;

		hr = pCatalogCollectionCo->get_Count(&lCountCo);
		if (!SUCCEEDED(hr)) goto Error;

		// iterate through components in application and set the
properties
		while (lCountCo > 0)
		{
			hr = pCatalogCollectionCo->get_Item(lCountCo
- 1, (IDispatch**) &pCatalogObjectCo);
			if (!SUCCEEDED(hr)) goto Error;

			// used for debugging (view the name)
			hr = pCatalogObjectCo->get_Name(&vTmp);
			if (!SUCCEEDED(hr)) goto Error;

			if
(!wcscmp(vTmp.bstrVal,L"TPCC.AllRemoteTxns.1"))
				bRemote=TRUE;
			else
				bRemote=FALSE;

			bstrTemp = "ConstructionEnabled";
			bTmp = TRUE;
			vTmp = bTmp;
			hr = pCatalogObjectCo->put_Value(bstrTemp,
vTmp);
			if (!SUCCEEDED(hr)) goto Error;

			bstrTemp = "ConstructorString";
			bstrTemp2 = "dummy string (do not remove)";
			vTmp = bstrTemp2;
			hr = pCatalogObjectCo->put_Value(bstrTemp,
vTmp);
			if (!SUCCEEDED(hr)) goto Error;

			bstrTemp = "JustInTimeActivation";
			bTmp = TRUE;
			vTmp = bTmp;
			hr = pCatalogObjectCo->put_Value(bstrTemp,
vTmp);
			if (!SUCCEEDED(hr)) goto Error;

			bstrTemp = "MaxPoolSize";
			vTmp.Clear();		// clear variant so it isn't
stored as a bool (_variant_t feature)
			if (!bRemote)
			{
				vTmp = (long)30;
			}
			else
			{
				vTmp = (long)5;
			}

			hr = pCatalogObjectCo->put_Value(bstrTemp,
vTmp);
			if (!SUCCEEDED(hr)) goto Error;

			bstrTemp = "CreationTimeout";
			vTmp.Clear();		// clear variant so it isn't
stored as a bool (_variant_t feature)
			vTmp = (long)300000;
			hr = pCatalogObjectCo->put_Value(bstrTemp,
vTmp);
			if (!SUCCEEDED(hr))
			{
				goto Error;
			}

			bstrTemp = "MinPoolSize";
			vTmp.Clear();		// clear variant so it isn't
stored as a bool (_variant_t feature)
			if (!bRemote)
			{
				vTmp = (long)1;
			}
			else
			{
				vTmp = (long)1;
			}

			hr = pCatalogObjectCo->put_Value(bstrTemp,
vTmp);
```

```
                        if (!SUCCEEDED(hr))
                        {
                                goto Error;
                        }


                        bstrTemp = "ObjectPoolingEnabled";
                        vTmp.Clear();           // clear variant so it isn't
stored as a bool (_variant_t feature)
                        bTmp = TRUE;
                        vTmp = bTmp;
                        hr = pCatalogObjectCo->put_Value(bstrTemp,
vTmp);
                        if (!SUCCEEDED(hr)) goto Error;

                        bstrTemp = "EventTrackingEnabled";
                        vTmp.Clear();
                        bTmp = FALSE;
                        vTmp = bTmp;
                        hr = pCatalogObjectCo->put_Value(bstrTemp,
vTmp);
                        if (!SUCCEEDED(hr))
                        {
                                goto Error;
                        }

                        // save key to get the InterfacesForComponent
collection
                        hr = pCatalogObjectCo->get_Key(&vKey);
                        if (!SUCCEEDED(hr)) goto Error;

                        bstrTemp = "InterfacesForComponent";
                        hr =
pCatalogCollectionCo->GetCollection(bstrTemp, vKey, (IDispatch**)
&pCatalogCollectionItf);
                        if (!SUCCEEDED(hr)) goto Error;

                        hr = pCatalogCollectionItf->Populate();
                        if (!SUCCEEDED(hr)) goto Error;

                        hr =
pCatalogCollectionItf->get_Count(&lCountItf);
                        if (!SUCCEEDED(hr)) goto Error;

                        // iterate through interfaces in component
                        while (lCountItf > 0)
                        {
                                hr =
pCatalogCollectionItf->get_Item(lCountItf - 1, (IDispatch**)
&pCatalogObjectItf);
                                if (!SUCCEEDED(hr)) goto Error;

                                // save key to get the
MethodsForInterface collection
                                hr =
pCatalogObjectItf->get_Key(&vKey);
                                if (!SUCCEEDED(hr)) goto Error;

                                bstrTemp = "MethodsForInterface";
                                hr =
pCatalogCollectionItf->GetCollection(bstrTemp, vKey, (IDispatch**)
&pCatalogCollectionMethod);
                                if (!SUCCEEDED(hr)) goto Error;

                                hr =
pCatalogCollectionMethod->Populate();
                                if (!SUCCEEDED(hr)) goto Error;

                                hr =
pCatalogCollectionMethod->get_Count(&lCountMethod);
                                if (!SUCCEEDED(hr)) goto Error;

                                // iterate through methods of interface
                                while (lCountMethod > 0)
                                {
                                        hr =
pCatalogCollectionMethod->get_Item(lCountMethod - 1,
(IDispatch**) &pCatalogObjectMethod);
                                        if (!SUCCEEDED(hr))
goto Error;

                                        bstrTemp =
"AutoComplete";
                                        vTmp.Clear();           //
clear variant so it isn't stored as a bool (_variant_t feature)

                                        bTmp = TRUE;
                                        vTmp = bTmp;
                                        hr =
pCatalogObjectMethod->put_Value(bstrTemp, vTmp);
                                        if (!SUCCEEDED(hr))
                                        {
                                                goto Error;
                                        }


pCatalogObjectMethod->Release();
                                        pCatalogObjectMethod =
NULL;

                                        lCountMethod--;
                                }

                                // save changes
                                hr =
pCatalogCollectionMethod->SaveChanges(&lActProp);
                                if (!SUCCEEDED(hr)) goto Error;

                                pCatalogObjectItf->Release();
                                pCatalogObjectItf = NULL;

                                lCountItf--;

                        }


                        pCatalogObjectCo->Release();
                        pCatalogObjectCo = NULL;

                        lCountCo--;
                }


                // save changes
                hr = pCatalogCollectionCo->SaveChanges(&lActProp);
                if (!SUCCEEDED(hr)) goto Error;

                pCatalogCollectionApp->Release();
                pCatalogCollectionApp = NULL;

                pCatalogCollectionCo->Release();
                pCatalogCollectionCo = NULL;

                pCatalogCollectionItf->Release();
                pCatalogCollectionItf = NULL;
```

```
        pCatalogCollectionMethod->Release();
        pCatalogCollectionMethod = NULL;


Error:
        CoUninitialize();

        if (!SUCCEEDED(hr))
        {
                LPTSTR lpBuf;
                DWORD dwRes =
FormatMessage(FORMAT_MESSAGE_ALLOCATE_BUFFER|
FORMAT_MESSAGE_FROM_SYSTEM,

                NULL,

                hr,

                MAKELANGID(LANG_NEUTRAL,
SUBLANG_DEFAULT),

                (LPTSTR) &lpBuf,

                0,

                NULL);
//              _tprintf(__T("Error adding components.
HRESULT: 0x%x\n%s"), hr, lpBuf);
                return TRUE;
        }
        else
                return FALSE;
}
```

install_resource.h

```
//{{NO_DEPENDENCIES}}
// Microsoft Developer Studio generated include file.
// Used by install.rc
//
#define IDD_DIALOG1                 101
#define IDI_ICON1                   102
#define IDR_TPCCDLL                 103
#define IDD_DIALOG2                 105
#define IDI_ICON2                   106
#define IDR_DELIVERY                107
#define IDD_DIALOG3                 108
#define IDR_LICENSE1                112
#define IDD_DIALOG4                 113
#define IDR_TPCCOBJ1                117
#define IDR_TPCCSTUB1               118
#define IDR_DBLIB_DLL               122
#define IDR_ODBC_DLL                123
#define IDR_TUXEDO_APP              124
#define IDR_TUXEDO_DLL              125
#define IDR_COM_DLL                 126
#define IDR_COMPS_DLL               127
#define IDR_COMALL_DLL              128
#define IDR_COMTYPLIB_DLL           129
#define IDR_REMOTE_DLL              131
#define IDR_COMREMTYPLIB_DLL        132
#define IDR_COMREMPS_DLL            133
#define BN_LOG                      1001
#define ED_KEEP                     1002
#define ED_THREADS                  1003
#define ED_THREADS2                 1004
#define IDC_PATH                    1007
#define IDC_VERSION                 1009
#define IDC_RESULTS                 1010
#define IDC_PROGRESS1               1011
#define IDC_STATUS                  1012
#define IDC_BUTTON1                 1013
#define ED_MAXCONNECTION            1014
#define ED_IIS_MAX_THEAD_POOL_LIMIT 1015
#define ED_MAXDELIVERIES            1016
#define ED_WEB_SERVICE_BACKLOG_QUEUE_SIZE 1017
#define ED_IIS_THREAD_TIMEOUT       1018
#define ED_IIS_LISTEN_BACKLOG       1019
#define ED_MAXWAREHOUSES            1020
#define IDC_DBLIB                   1021
#define IDC_LICENSE                 1022
#define IDC_ODBC                    1022
#define IDC_CONNECT_POOL            1023
#define ED_DB_SERVER                1023
#define ED_USER_CONNECT_DELAY_TIME  1024
#define ED_DB_USER_ID               1024
#define IDC_MTS                     1025
#define IDC_TM_MTS                  1025
#define IDC_TM_TUXEDO               1026
#define IDC_TM_NONE                 1027
#define ED_DB_PASSWORD              1028
#define ED_DB_NAME                  1029
#define IDC_TM_ENCINA               1030
#define ED_WAREHOUSE_PATH           1032

// Next default values for new objects
//
#ifdef APSTUDIO_INVOKED
#ifndef APSTUDIO_READONLY_SYMBOLS
#define _APS_NEXT_RESOURCE_VALUE    134
#define _APS_NEXT_COMMAND_VALUE     40001
#define _APS_NEXT_CONTROL_VALUE     1032
#define _APS_NEXT_SYMED_VALUE       101
#endif
#endif
```

isapi_dll_resource.h

```
//{{NO_DEPENDENCIES}}
// Microsoft Developer Studio generated include file.
// Used by tpcc.rc
//
#define IDD_DIALOG1                 101

// Next default values for new objects
//
#ifdef APSTUDIO_INVOKED
#ifndef APSTUDIO_READONLY_SYMBOLS
#define _APS_NEXT_RESOURCE_VALUE    102
#define _APS_NEXT_COMMAND_VALUE     40001
#define _APS_NEXT_CONTROL_VALUE     1000
#define _APS_NEXT_SYMED_VALUE       101
#endif
#endif
```

license.txt

```
END-USER LICENSE AGREEMENT FOR
MICROSOFT TPC-C BENCHMARK KIT

IMPORTANT READ CAREFULLY: This Microsoft End-
```

User License Agreement (EULA) is a legal agreement between you (either an individual or a single entity) and Microsoft Corporation for the Microsoft software product identified above, which includes computer software and may include associated media, printed materials, and online or electronic documentation (SOFTWARE PRODUCT). By installing, copying, or otherwise using the SOFTWARE PRODUCT, you agree to be bound by the terms of this EULA. If you do not agree to the terms of this Agreement, you are not authorized to use the SOFTWARE PRODUCT.

The SOFTWARE PRODUCT is protected by copyright laws and international copyright treaties, as well as other intellectual property laws and treaties. The SOFTWARE PRODUCT is licensed, not sold.

1. GRANT OF LICENSE. This EULA grants you the following rights:
Use. Microsoft grants to you the right to install and use copies of the SOFTWARE PRODUCT only in conjunction with validly licensed copies of Microsoft SQL Server and/or Microsoft Windows NT Server software. You may also make copies of the SOFTWARE PRODUCT for backup and archival purposes.

2. RESTRICTIONS.
--You must maintain all copyright notices on all copies of the SOFTWARE PRODUCT.
--You may not distribute copies of the SOFTWARE PRODUCT to third parties.
--You may not rent, lease or lend the SOFTWARE PRODUCT.
--You may not use the SOFTWARE PRODUCT or any derivative works thereof to internally test database management system software other than Microsoft SQL Server and/or operating system software other than Microsoft Windows NT.
-- You may not disclose the results of any benchmark tests using the SOFTWARE PRODUCT to any third party without Microsoft's prior written approval.
-- You may not disclose or provide the SOFTWARE PRODUCT or any derivative works thereof, or any information relating to the SOFTWARE PRODUCT (including the existence of the SOFTWARE PRODUCT or the results of use and testing or benchmark testing), to any third party without Microsoft's written permission.

3. TERMINATION. Without prejudice to any other rights, Microsoft may terminate this EULA if you fail to comply with the terms and conditions of this EULA. In such event, you must destroy all copies of the SOFTWARE PRODUCT.

4. COPYRIGHT. All title and copyrights in and to the SOFTWARE PRODUCT and any copies thereof are owned by Microsoft or its suppliers. All title and intellectual property rights in and to the content which may be accessed through use of the SOFTWARE PRODUCT is the property of the respective content owner and may be protected by applicable copyright or other intellectual property laws and treaties. This EULA grants you no rights to use such content.

5. UPGRADES. If the SOFTWARE PRODUCT is labeled as an upgrade, you must be properly licensed to use a product identified by Microsoft as being eligible for the upgrade in order to use the SOFTWARE PRODUCT. A SOFTWARE PRODUCT labeled as an upgrade replaces and/or supplements the product that formed the basis for your eligibility for the upgrade. You may use the resulting upgraded product only in accordance with the terms of this EULA.

6. U.S. GOVERNMENT RESTRICTED RIGHTS.
The SOFTWARE PRODUCT is provided with RESTRICTED RIGHTS. Use, duplication, or disclosure by the Government is subject to restrictions as set forth in subparagraph (c)(1)(ii) of the Rights in Technical Data and Computer Software clause at DFARS 252.227-7013 or subparagraphs (c)(1) and (2) of the Commercial Computer Software Restricted Rights at 48 CFR 52.227-19, as applicable. Manufacturer is Microsoft Corporation/One Microsoft Way/Redmond, WA 98052-6399.

7. EXPORT RESTRICTIONS.
You agree that you will not export or re-export the SOFTWARE PRODUCT to any country, person, entity or end user subject to U.S.A. export restrictions. Restricted countries currently include, but are not necessarily limited to Cuba, Iran, Iraq, Libya, North Korea, Syria, and the Federal Republic of Yugoslavia (Serbia and Montenegro, U.N. Protected Areas and areas of Republic of Bosnia and Herzegovina under the control of Bosnian Serb forces). You warrant and represent that neither the U.S.A. Bureau of Export Administration nor any other federal agency has suspended, revoked or denied your export privileges.

8. NO WARRANTY. ANY USE OF THE SOFTWARE PRODUCT IS AT YOUR OWN RISK. THE SOFTWARE PRODUCT IS PROVIDED FOR USE ONLY WITH MICROSOFT SQL SERVER AND/OR MICROSOFT WINDOWS NT SERVER SOFTWARE. TO THE MAXIMUM EXTENT PERMITTED BY APPLICABLE LAW, MICROSOFT AND ITS SUPPLIERS DISCLAIM ALL WARRANTIES AND CONDITIONS, EITHER EXPRESS OR IMPLIED, INCLUDING, BUT NOT LIMITED TO, IMPLIED WARRANTIES OF MERCHANTABILITY, FITNESS FOR A PARTICULAR PURPOSE, AND NONINFRINGEMENT.

9. NO LIABILITY FOR CONSEQUENTIAL DAMAGES.
TO THE MAXIMUM EXTENT PERMITTED BY APPLICABLE LAW, IN NO EVENT SHALL MICROSOFT OR ITS SUPPLIERS BE LIABLE FOR ANY SPECIAL, INCIDENTAL, INDIRECT, OR CONSEQUENTIAL DAMAGES WHATSOEVER (INCLUDING, WITHOUT LIMITATION, DAMAGES FOR LOSS OF BUSINESS PROFITS, BUSINESS INTERRUPTION, LOSS OF BUSINESS INFORMATION, OR ANY OTHER PECUNIARY LOSS) ARISING OUT OF THE USE OF OR INABILITY TO USE THE SOFTWARE PRODUCT, EVEN IF MICROSOFT HAS BEEN ADVISED OF THE POSSIBILITY OF SUCH DAMAGES. BECAUSE SOME STATES AND JURISDICTIONS DO NOT ALLOW THE EXCLUSION OR LIMITATION OF LIABILITY FOR CONSEQUENTIAL OR INCIDENTAL DAMAGES, THE ABOVE LIMITATION MAY NOT APPLY TO YOU.

10. LIMITATION OF LIABILITY. MICROSOFT'S ENTIRE LIABILITY AND YOUR EXCLUSIVE REMEDY UNDER THIS EULA SHALL NOT EXCEED FIVE DOLLARS (US$5.00).

11. MISCELLANEOUS
This EULA is governed by the laws of the State of Washington, U.S.A.
Should you have any questions concerning this EULA, or if you desire to contact Microsoft for any reason, please contact the Microsoft subsidiary serving your country, or write: Microsoft Sales Information Center/One Microsoft

Way/Redmond, WA 98052-6399.

Si vous avez acquis votre produit Microsoft au CANADA, la garantie limit,e suivante vous concerne:

EXCLUSION DE GARANTIES. Microsoft renonce entiŠrement … toute garantie pour le LOGICIEL. Le LOGICIEL et toute autre documentation s'y rapportant sont fournis ® comme tels ¯ sans aucune garantie quelle qu'elle soit, expresse ou implicite, y compris, mais ne se limitant pas aux garanties implicites de la qualit, marchande ou un usage particulier. Le risque total d,coulant de l'utilisation ou de la performance du LOGICIEL est entre vos mains.

RESPONSABILIT LIMIT E. La seule obligation de Microsoft et votre recours exclusif concernant ce contrat n'excŠderont pas cinq dollare (US$5.00).

ABSENCE DE RESPONSABILIT POUR LES DOMMAGES INDIRECTS.
Microsoft ou ses fournisseurs ne pourront ˆtre tenus responsables en aucune circonstance de tout dommage quel qu'il soit (y compris mais non de fa‡on limitative les dommages directs ou indirects caus,s par la perte de b,n,fices commerciaux, l'interruption des affaires, la perte d'information commerciale ou toute autre perte p,cuniaire) r,sultant de l'utilisation ou de l'impossibilit, d'utilisation de ce produit, et ce, mˆme si la soci,t, Microsoft a ,t, avis,e de l' ,ventualit, de tels dommages. Certains ,tats/juridictions ne permettent pas l'exclusion ou la limitation de responsabilit, relative aux dommages indirects ou cons,cutifs, et la limitation ci-dessus peut ne pas s'appliquer … votre ,gard. La pr,sente Convention est r,gie par les lois de la province d'Ontario, Canada. Chacune des parties … la pr,sente reconnaŒt irr,vocablement la comp,tence des tribunaux de la province d'Ontario et consent … instituer tout litige qui pourrait d,couler de la pr,sente auprŠs des tribunaux situ,s dans le district judiciaire de York, province d'Ontario. Au cas o— vous auriez des questions concernant cette licence ou que vous d,siriez vous mettre en rapport avec Microsoft pour quelque raison que ce soit, veuillez contacter la succursale Microsoft desservant votre pays, dont l'adresse est fournie dans ce produit, ou ,crire …: Microsoft Customer Sales and Service, One Microsoft Way, Redmond, Washington 98052 6399.

methods.h

```
/*          FILE:                   METHODS.H
 *                                          Microsoft TPC-C Kit Ver.
4.20.000
 *                                          Copyright Microsoft,
1999
 *          All Rights Reserved
 *
 *                                          not yet audited
 *
 *          PURPOSE:                Header file for COM components.
 *
 *  Change history:
 *                      4.20.000 - first version
 */


enum COMPONENT_ERROR
{
        ERR_MISSING_REGISTRY_ENTRIES= 1,
        ERR_LOADDLL_FAILED,
        ERR_GETPROCADDR_FAILED,
        ERR_UNKNOWN_DB_PROTOCOL
};

class CCOMPONENT_ERR : public CBaseErr
{
        public:
                CCOMPONENT_ERR(COMPONENT_ERROR
Err)
                {
                        m_Error = Err;
                        m_szTextDetail = NULL;
                        m_SystemErr = 0;
                        m_szErrorText = NULL;
                };

                CCOMPONENT_ERR(COMPONENT_ERROR
Err, char *szTextDetail, DWORD dwSystemErr)
                {
                        m_Error = Err;
                        m_szTextDetail = new
char[strlen(szTextDetail)+1];
                        strcpy( m_szTextDetail, szTextDetail
);
                        m_SystemErr = dwSystemErr;
                        m_szErrorText = NULL;
                };

                ~CCOMPONENT_ERR()
                {
                        if (m_szTextDetail != NULL)
                                delete [] m_szTextDetail;
                        if (m_szErrorText != NULL)
                                delete [] m_szErrorText;
                };

                COMPONENT_ERROR         m_Error;
                char
*m_szTextDetail;
                char
*m_szErrorText;
                DWORD                   m_SystemErr;

                int ErrorType() {return
ERR_TYPE_COMPONENT;};
                int ErrorNum() {return m_Error;};
                char *ErrorText();
};


static void WriteMessageToEventLog(LPTSTR lpszMsg);


////////////////////////////////////////////////////////////////////
// CTPCC_Common
class CTPCC_Common :
        public ITPCC,
        public IObjectControl,
        public IObjectConstruct,
        public CComObjectRootEx<CComSingleThreadModel>
{
public:
BEGIN_COM_MAP(CTPCC_Common)
        COM_INTERFACE_ENTRY(ITPCC)
        COM_INTERFACE_ENTRY(IObjectControl)
        COM_INTERFACE_ENTRY(IObjectConstruct)
END_COM_MAP()
```

```
        CTPCC_Common();
        ~CTPCC_Common();

// ITPCC
public:
        HRESULT __stdcall NewOrder(             VARIANT
txn_in, VARIANT* txn_out);
        HRESULT __stdcall Payment(              VARIANT
txn_in, VARIANT* txn_out);
        HRESULT __stdcall Delivery(             VARIANT
txn_in) {return E_NOTIMPL;}
        HRESULT __stdcall StockLevel(VARIANT txn_in,
VARIANT* txn_out);
        HRESULT __stdcall OrderStatus(          VARIANT
txn_in, VARIANT* txn_out);

        HRESULT __stdcall CallSetComplete();

// IObjectControl
        STDMETHODIMP_(BOOL) CanBePooled() { return
m_bCanBePooled; }
        STDMETHODIMP Activate() { return S_OK; }        //
we don't support COM Services transactions (no enlistment)
        STDMETHODIMP_(void) Deactivate() { /* nothing to do
*/ }

// IObjectConstruct
        STDMETHODIMP Construct(IDispatch * pUnk);

        // helper methods
private:
        BOOL            m_bCanBePooled;
        CTPCC_BASE      *m_pTxn;

        struct COM_DATA
        {
                int retval;
                int error;
                union
                {
                        NEW_ORDER_DATA
NewOrder;
                        PAYMENT_DATA
Payment;
                        DELIVERY_DATA
Delivery;
                        STOCK_LEVEL_DATA
StockLevel;
                        ORDER_STATUS_DATA
OrderStatus;
                } u;
        };

};

/////////////////////////////////////////////////////////////////////////////
// CTPCC
class CTPCC :
        public CTPCC_Common,
        public CComCoClass<CTPCC, &CLSID_TPCC>
{
public:
DECLARE_REGISTRY_RESOURCEID(IDR_TPCC)

BEGIN_COM_MAP(CTPCC)
        COM_INTERFACE_ENTRY2(IUnknown,
CComObjectRootEx)
        COM_INTERFACE_ENTRY_CHAIN(CTPCC_Common)
END_COM_MAP()

};


/////////////////////////////////////////////////////////////////////////////
// CNewOrder
class CNewOrder :
        public CTPCC_Common,
        public CComCoClass<CNewOrder, &CLSID_NewOrder>
{
public:
DECLARE_REGISTRY_RESOURCEID(IDR_NEWORDER)

BEGIN_COM_MAP(CNewOrder)
        COM_INTERFACE_ENTRY2(IUnknown,
CComObjectRootEx)
        COM_INTERFACE_ENTRY_CHAIN(CTPCC_Common)
END_COM_MAP()

// ITPCC
public:
//      HRESULT __stdcall NewOrder(             int* iSize,
UCHAR** txn) {return E_NOTIMPL;}
        HRESULT __stdcall Payment(              VARIANT
txn_in, VARIANT* txn_out) {return E_NOTIMPL;}
        HRESULT __stdcall StockLevel(VARIANT txn_in,
VARIANT* txn_out) {return E_NOTIMPL;}
        HRESULT __stdcall OrderStatus(          VARIANT
txn_in, VARIANT* txn_out) {return E_NOTIMPL;}
};


        /////////////////////////////////////////////////////////////////////////////
// COrderStatus
class COrderStatus :
        public CTPCC_Common,
        public CComCoClass<COrderStatus,
&CLSID_OrderStatus>
{
public:
DECLARE_REGISTRY_RESOURCEID(IDR_ORDERSTATUS)

BEGIN_COM_MAP(COrderStatus)
        COM_INTERFACE_ENTRY2(IUnknown,
CComObjectRootEx)
        COM_INTERFACE_ENTRY_CHAIN(CTPCC_Common)
END_COM_MAP()

// ITPCC
public:
        HRESULT __stdcall NewOrder(VARIANT txn_in,
VARIANT* txn_out) {return E_NOTIMPL;}
        HRESULT __stdcall Payment(VARIANT txn_in,
VARIANT* txn_out) {return E_NOTIMPL;}
        HRESULT __stdcall StockLevel(VARIANT txn_in,
VARIANT* txn_out) {return E_NOTIMPL;}
//      HRESULT __stdcall OrderStatus(          int* iSize,
UCHAR** txn) {return E_NOTIMPL;}
};


/////////////////////////////////////////////////////////////////////////////
// CPayment
class CPayment :
        public CTPCC_Common,
        public CComCoClass<CPayment, &CLSID_Payment>
```

```
{
public:
DECLARE_REGISTRY_RESOURCEID(IDR_PAYMENT)

BEGIN_COM_MAP(CPayment)
	COM_INTERFACE_ENTRY2(IUnknown,
CComObjectRootEx)
	COM_INTERFACE_ENTRY_CHAIN(CTPCC_Common)
END_COM_MAP()

// ITPCC
public:
	HRESULT __stdcall NewOrder(VARIANT txn_in,
VARIANT* txn_out) {return E_NOTIMPL;}
//	HRESULT __stdcall Payment(		int* iSize,
UCHAR** txn) {return E_NOTIMPL;}
	HRESULT __stdcall StockLevel(VARIANT txn_in,
VARIANT* txn_out) {return E_NOTIMPL;}
	HRESULT __stdcall OrderStatus(VARIANT txn_in,
VARIANT* txn_out) {return E_NOTIMPL;}
};


////////////////////////////////////////////////////////////////////////
// CStockLevel
class CStockLevel :
	public CTPCC_Common,
	public CComCoClass<CStockLevel, &CLSID_StockLevel>
{
public:
DECLARE_REGISTRY_RESOURCEID(IDR_STOCKLEVEL)

BEGIN_COM_MAP(CStockLevel)
	COM_INTERFACE_ENTRY2(IUnknown,
CComObjectRootEx)
	COM_INTERFACE_ENTRY_CHAIN(CTPCC_Common)
END_COM_MAP()

// ITPCC
public:
	HRESULT __stdcall NewOrder(VARIANT txn_in,
VARIANT* txn_out) {return E_NOTIMPL;}
	HRESULT __stdcall Payment(VARIANT txn_in,
VARIANT* txn_out) {return E_NOTIMPL;}
//	HRESULT __stdcall StockLevel(int* iSize, UCHAR** txn)
{return E_NOTIMPL;}
	HRESULT __stdcall OrderStatus(VARIANT txn_in,
VARIANT* txn_out) {return E_NOTIMPL;}
};
```

ReadRegistry.cpp

```
/*	FILE:		READREGISTRY.CPP
 *					Microsoft TPC-C Kit Ver.
4.20.000
 *					Copyright Microsoft,
1999
 *	All Rights Reserved
 *
 *					not yet audited
 *
 *	PURPOSE:	Implementation for TPC-C Tuxedo
class.
 *	Contact:	Charles Levine (clevine@microsoft.com)
 *
 *  Change history:
 *			4.20.000 - first version
 */


/* FUNCTION: ReadTPCCRegistrySettings
 *
 * PURPOSE:	This function reads the NT registry for startup
parameters. There parameters are
 *				under the TPCC key.
 *
 * RETURNS	FALSE = no errors
 *				TRUE  = error reading registry
 */
BOOL ReadTPCCRegistrySettings( TPCCREGISTRYDATA *pReg )
{
	HKEY	hKey;
	DWORD	size;
	DWORD	type;
	DWORD	dwTmp;
	char	szTmp[256];

	if ( RegOpenKeyEx(HKEY_LOCAL_MACHINE,
"SOFTWARE\\Microsoft\\TPCC", 0, KEY_READ, &hKey) !=
ERROR_SUCCESS )
		return TRUE;

	// determine database protocol to use; may be either ODBC
or DBLIB
	pReg->eDB_Protocol = Unspecified;
	size = sizeof(szTmp);
	if ( RegQueryValueEx(hKey, "DB_Protocol", 0, &type,
(BYTE *)&szTmp, &size) == ERROR_SUCCESS )
	{
		if ( !stricmp(szTmp, szDBNames[ODBC]) )
			pReg->eDB_Protocol = ODBC;
		else if ( !stricmp(szTmp, szDBNames[DBLIB]) )
			pReg->eDB_Protocol = DBLIB;
	}

	pReg->eTxnMon = None;
	// determine txn monitor to use; may be either TUXEDO, or
blank
	size = sizeof(szTmp);
	if ( RegQueryValueEx(hKey, "TxnMonitor", 0, &type,
(BYTE *)&szTmp, &size) == ERROR_SUCCESS )
	{
		if ( !stricmp(szTmp,
szTxnMonNames[TUXEDO]) )
			pReg->eTxnMon = TUXEDO;
		else if ( !stricmp(szTmp,
szTxnMonNames[ENCINA]) )
			pReg->eTxnMon = ENCINA;
		else if ( !stricmp(szTmp,
szTxnMonNames[COM]) )
			pReg->eTxnMon = COM;
	}

	pReg->bCOM_SinglePool = FALSE;
	size = sizeof(szTmp);
	if ( RegQueryValueEx(hKey, "COM_SinglePool", 0, &type,
(BYTE *)&szTmp, &size) == ERROR_SUCCESS )
	{
		if ( !stricmp(szTmp, "YES") )
			pReg->bCOM_SinglePool = TRUE;
	}

	pReg->dwMaxConnections = 0;
	size = sizeof(dwTmp);
```

```
        if ( ( RegQueryValueEx(hKey, "MaxConnections", 0,
&type, (LPBYTE)&dwTmp, &size) == ERROR_SUCCESS )
                && (type == REG_DWORD) )
                pReg->dwMaxConnections = dwTmp;

        pReg->dwMaxPendingDeliveries = 0;
        size = sizeof(dwTmp);
        if ( ( RegQueryValueEx(hKey, "MaxPendingDeliveries", 0,
&type, (LPBYTE)&dwTmp, &size) == ERROR_SUCCESS )
                && (type == REG_DWORD) )
                pReg->dwMaxPendingDeliveries = dwTmp;

        pReg->dwNumberOfDeliveryThreads = 0;
        size = sizeof(dwTmp);
        if ( ( RegQueryValueEx(hKey,
"NumberOfDeliveryThreads", 0, &type, (LPBYTE)&dwTmp, &size)
== ERROR_SUCCESS )
                && (type == REG_DWORD) )
                pReg->dwNumberOfDeliveryThreads = dwTmp;

        size = sizeof( pReg->szPath );
        if ( RegQueryValueEx(hKey, "Path", 0, &type, (BYTE
*)&pReg->szPath, &size) != ERROR_SUCCESS )
                pReg->szPath[0] = 0;

        size = sizeof( pReg->szDbServer );
        if ( RegQueryValueEx(hKey, "DbServer", 0, &type, (BYTE
*)&pReg->szDbServer, &size) != ERROR_SUCCESS )
                pReg->szDbServer[0] = 0;

        size = sizeof( pReg->szDbName );
        if ( RegQueryValueEx(hKey, "DbName", 0, &type, (BYTE
*)&pReg->szDbName, &size) != ERROR_SUCCESS )
                pReg->szDbName[0] = 0;

        size = sizeof( pReg->szDbUser );
        if ( RegQueryValueEx(hKey, "DbUser", 0, &type, (BYTE
*)&pReg->szDbUser, &size) != ERROR_SUCCESS )
                pReg->szDbUser[0] = 0;

        size = sizeof( pReg->szDbPassword );
        if ( RegQueryValueEx(hKey, "DbPassword", 0, &type,
(BYTE *)&pReg->szDbPassword, &size) != ERROR_SUCCESS )
                pReg->szDbPassword[0] = 0;


        RegCloseKey(hKey);

        return FALSE;
}
```

ReadRegistry.h

```
/*      FILE:           ReadRegistry.h
 *                              Microsoft TPC-C Kit Ver.
4.22.000
 *                              Copyright Microsoft,
2000
 *      All Rights Reserved
 *
 *                              not audited
 *
 *      PURPOSE:        Header for registry related code.
 *
 *  Change history:
 *              4.20.000 - first version
 */

enum DBPROTOCOL { Unspecified, ODBC, DBLIB };
const char *szDBNames[] = { "Unspecified", "ODBC", "DBLIB"};

enum TXNMON { None, TUXEDO, ENCINA, COM };
const char *szTxnMonNames[] = { "NONE", "TUXEDO", "ENCINA",
"COM" };

//This structure defines the data necessary to keep distinct for each
terminal or client connection.
typedef struct _TPCCREGISTRYDATA
{
        enum DBPROTOCOL eDB_Protocol;
        enum TXNMON eTxnMon;
        BOOL bCOM_SinglePool;
        DWORD dwMaxConnections;
        DWORD dwMaxPendingDeliveries;
        DWORD dwNumberOfDeliveryThreads;
        char szPath[128];
        char szDbServer[32];
        char szDbName[32];
        char szDbUser[32];
        char szDbPassword[32];
} TPCCREGISTRYDATA, *PTPCCREGISTRYDATA;

BOOL ReadTPCCRegistrySettings( TPCCREGISTRYDATA *pReg );
```

ReadWHouse.cpp

```
/*      FILE:           ReadWHouse.cpp
 *                              Microsoft TPC-C Kit Ver.
4.20.000
 *                              Copyright Microsoft,
1999
 *      All Rights Reserved
 *
 *
 *      PURPOSE:        define entry points for
ReadWHouse.cpp
 *      Contact:    Sally Martin (sallym@microsoft.com)
 *
 *  Change history:
 *              4/25/00 - initial version
 */

#include <windows.h>
#include <stdio.h>


#include <assert.h>
#include <time.h>


#define DBNTWIN32
#include <sqltypes.h>
#include <sql.h>
#include <sqlext.h>
#include <odbcss.h>


#define SQLSUCCEEDED(rc) (rc == SQL_SUCCESS || rc ==
SQL_SUCCESS_WITH_INFO|| rc == SQL_NO_DATA)


// forward decl of routine
```

```
static int ProcessError(SQLHANDLE henv, SQLHDBC hdbc,
SQLHSTMT hstmt);
static void WriteMessageToEventLog(LPTSTR lpszMsg);

// begin code

int GetWareHouseTable(void **ppWareHouseArray, // array of ints
                                                int *piCount,
                                                int
*piTotalWhs,
                                                LPCSTR
szUser,         // user name for login
                                                LPCSTR
szPassword,     // password for login
                                                LPCSTR
szDSN                   // name of DSN to use
)
{
        // this routine opens the local database and queries it for the
list
        // of local warehouses
        // it allocates space and builds an array of those warehouse
ids.
        // first get the number of ids, and allocate the space required
        // the second query gets the actual numbers
        //SELECT W_ID FROM WAREHOUSE WHERE
NODENUMBER(W_ID)= CURRENT NODE ORDER BY W_ID
        //SELECT COUNT (*) FROM WAREHOUSE WHERE
NODENUMBER(W_ID)= CURRENT NODE
        // initialization
        unsigned char   szSQLStmt[1024];
        RETCODE                         rc;
        int
iNumWareHouses=0;
        int                             iTotalWhs=0;
        int
iWareHouseNum=0;
        int                             ii;
        int                             *pArray =
NULL;
        SQLHDBC                         hdbc =
SQL_NULL_HDBC;
        SQLHSTMT                hstmt =
SQL_NULL_HSTMT;
        SQLHANDLE               henv = 0;


        rc=SQLSetEnvAttr(henv,
                SQL_ATTR_CONNECTION_POOLING,
                SQL_CP_OFF ,
                0);

        if (!SQLSUCCEEDED(rc))
                return ProcessError(henv,hdbc,hstmt);

        if( SQLAllocEnv(&henv) != SQL_SUCCESS)
                return ProcessError(henv,hdbc,hstmt);

        if( SQLAllocConnect(henv, &hdbc)!= SQL_SUCCESS)
                return ProcessError(henv,hdbc,hstmt);

        //
        //  Set AUTOCOMMIT OFF
        //
        if( SQLSetConnectOption(hdbc, SQL_AUTOCOMMIT,
SQL_AUTOCOMMIT_OFF)!=SQL_SUCCESS)
                return ProcessError(henv,hdbc,hstmt);
        //
        // set isolation
        //
        if ( SQLSetConnectAttr(hdbc,
SQL_ATTR_TXN_ISOLATION,
(SQLPOINTER)SQL_TXN_SERIALIZABLE,0) != SQL_SUCCESS )
                return ProcessError(henv,hdbc,hstmt);

        //
        //  Connect to db
        //
        {
                char
szConnectStr[256];
                char
szOutStr[1024];
                SQLSMALLINT             iOutStrLen;

                sprintf( szConnectStr,
"UID=%s;PWD=%s;DSN=%s", szUser, szPassword, szDSN );

                rc = SQLDriverConnect(hdbc, NULL,
(SQLCHAR*)szConnectStr, sizeof(szConnectStr),
                        (SQLCHAR*)szOutStr,
sizeof(szOutStr), &iOutStrLen, SQL_DRIVER_NOPROMPT );
                if (rc != SQL_SUCCESS && rc !=
SQL_SUCCESS_WITH_INFO)
                return ProcessError(henv,hdbc,hstmt);

        }

        // find out how large the array needs to be

        rc = SQLAllocStmt(hdbc, &hstmt);
        if (!SQLSUCCEEDED(rc)) return
ProcessError(henv,hdbc,hstmt);

        // bind to the database
        wsprintf((char *)szSQLStmt, "USE tpcc");
        // exec the command
        rc = SQLExecDirect(hstmt, szSQLStmt, SQL_NTS);
        if (!SQLSUCCEEDED(rc)) return
ProcessError(henv,hdbc,hstmt);


        wsprintf((char *)szSQLStmt, "SELECT COUNT (*) FROM
t_warehouse");

        // bind the columns
        rc = SQLBindCol(hstmt, 1, SQL_C_LONG,
&iNumWareHouses, 0, NULL);
        if (!SQLSUCCEEDED(rc)) return
ProcessError(henv,hdbc,hstmt);


        // exec the command
        rc = SQLExecDirect(hstmt, szSQLStmt, SQL_NTS);
        if (!SQLSUCCEEDED(rc)) return
ProcessError(henv,hdbc,hstmt);


        rc = SQLFetch(hstmt);
        if (!SQLSUCCEEDED(rc)) return
ProcessError(henv,hdbc,hstmt);


        SQLFreeStmt(hstmt, SQL_CLOSE);
        if (!SQLSUCCEEDED(rc))
```

```
	{
		return ProcessError(henv,hdbc,hstmt);
	}

	rc = SQLAllocStmt(hdbc, &hstmt);
	if (!SQLSUCCEEDED(rc))
	{
		return ProcessError(henv,hdbc,hstmt);
	}

	// get the total number of warehouses
	wsprintf((char *)szSQLStmt, "SELECT MAX (w_id)
FROM warehouse");

	// bind the columns
	rc = SQLBindCol(hstmt, 1, SQL_C_LONG, &iTotalWhs, 0,
NULL);
	if (!SQLSUCCEEDED(rc)) return
ProcessError(henv,hdbc,hstmt);

	// exec the command
	rc = SQLExecDirect(hstmt, szSQLStmt, SQL_NTS);
	if (!SQLSUCCEEDED(rc)) return
ProcessError(henv,hdbc,hstmt);


	rc = SQLFetch(hstmt);
	if (!SQLSUCCEEDED(rc)) return
ProcessError(henv,hdbc,hstmt);


	SQLFreeStmt(hstmt, SQL_CLOSE);
	if (!SQLSUCCEEDED(rc))
	{
		return ProcessError(henv,hdbc,hstmt);
	}

	if (piTotalWhs)
		*piTotalWhs = iTotalWhs;

	// allocate the array

	pArray=(int *)malloc(iTotalWhs * sizeof(int));
	*ppWareHouseArray = (void *)pArray;

	// zero out array
	memset ((void*)pArray,0,iTotalWhs);

	// select the data and copy to the array

	rc = SQLAllocStmt(hdbc, &hstmt);
	if (!SQLSUCCEEDED(rc))
	{
		free(pArray);
		*ppWareHouseArray = NULL;
		return ProcessError(henv,hdbc,hstmt);
	}

	wsprintf((char *)szSQLStmt,
		"SELECT w_id FROM t_warehouse ORDER
BY w_id");

	// bind the columns
	rc = SQLBindCol(hstmt, 1, SQL_C_LONG,
&iWareHouseNum, 0, NULL);
	if (!SQLSUCCEEDED(rc))
	{
		free(pArray);
		*ppWareHouseArray = NULL;
		return ProcessError(henv,hdbc,hstmt);
	}

	// exec the command
	rc = SQLExecDirect(hstmt, szSQLStmt, SQL_NTS);
	if (!SQLSUCCEEDED(rc))
	{
		free(pArray);
		*ppWareHouseArray = NULL;
		return ProcessError(henv,hdbc,hstmt);
	}

	// in a loop do the fetches
	// loop around the result set using fetch
	ii = 0;
	while ( (rc = SQLFetch(hstmt)) != SQL_NO_DATA)
	{
		if (!SQLSUCCEEDED(rc))
		{
			free(pArray);
			*ppWareHouseArray = NULL;
		return ProcessError(henv,hdbc,hstmt);
		}
		pArray[ii] = iWareHouseNum;
		ii++;
	}

	if (!SQLSUCCEEDED(rc))
	{
		free(pArray);
		*ppWareHouseArray = NULL;
		return ProcessError(henv,hdbc,hstmt);
	}

	*piCount = ii;

	rc=SQLFreeStmt(hstmt, SQL_CLOSE);
	if (!SQLSUCCEEDED(rc)) return
ProcessError(henv,hdbc,hstmt);

	// commit all transactions
	rc = SQLEndTran(SQL_HANDLE_ENV,
                                                henv,
SQL_COMMIT);

	if (!SQLSUCCEEDED(rc))
	{
		free(pArray);
		*ppWareHouseArray = NULL;
		return ProcessError(henv,hdbc,hstmt);
	}


	// cleanup


	rc=SQLDisconnect(hdbc);
	if (!SQLSUCCEEDED(rc)) return
ProcessError(henv,hdbc,hstmt);
	rc=SQLFreeHandle(SQL_HANDLE_DBC,hdbc);
	if (!SQLSUCCEEDED(rc)) return
ProcessError(henv,hdbc,hstmt);
	rc=SQLFreeEnv(henv);
	if (!SQLSUCCEEDED(rc)) return
ProcessError(henv,hdbc,hstmt);
```

```
        return (ERROR_SUCCESS);

}

static int ProcessError(SQLHANDLE henv, SQLHDBC hdbc,
SQLHSTMT hstmt)
{
        RETCODE                 rc;
        SDWORD          lNativeError;
        char            szState[6];
        char
szMsg[SQL_MAX_MESSAGE_LENGTH];
        char
szTmp[6*SQL_MAX_MESSAGE_LENGTH];

        szTmp[0] = 0;
        while (TRUE)
        {
                rc = SQLError(henv, hdbc, hstmt, (BYTE
*)&szState, &lNativeError,
                                                (BYTE
*)&szMsg, sizeof(szMsg), NULL);
                if (rc == SQL_NO_DATA)
                        break;

                // quit if there isn't enough room to concatenate
error text
                if ( (strlen(szMsg) + 2) > (sizeof(szTmp) -
strlen(szTmp)) )
                        break;

                // include line break after first error msg
                if (szTmp[0] != 0)
                        strcat( szTmp, "\n");
                strcat( szTmp, szMsg );
        }


        if (strlen(szTmp) > 0)
        {
                WriteMessageToEventLog( szTmp );
        }

        // cleanup
        SQLFreeStmt(hstmt, SQL_CLOSE);
        SQLDisconnect(hdbc);
        SQLFreeHandle(SQL_HANDLE_DBC, hdbc);

        return (E_FAIL);
}

static void WriteMessageToEventLog(LPTSTR lpszMsg)
{
   TCHAR   szMsg[256];
   HANDLE  hEventSource;
   LPTSTR  lpszStrings[2];

   // Use event logging to log the error.
   //
   hEventSource = RegisterEventSource(NULL,
TEXT("TPCC.DLL"));

   sprintf(szMsg, TEXT("Error in ReadWHouse.DLL: "));
   lpszStrings[0] = szMsg;
   lpszStrings[1] = lpszMsg;

   if (hEventSource != NULL)
        {
      ReportEvent(hEventSource, // handle of event source
        EVENTLOG_ERROR_TYPE,  // event type
        0,              // event category
        0,              // event ID
        NULL,           // current user's SID
        2,              // strings in  lpszStrings
        0,              // no bytes of raw data
        (LPCTSTR *)lpszStrings,    // array of error strings
        NULL);          // no raw data

      (VOID) DeregisterEventSource(hEventSource);
   }
}
```

ReadWHouse.h

```
/*      FILE:           ReadWHouse.h
 *                              Microsoft TPC-C Kit Ver.
4.20.000
 *                              Copyright Microsoft,
1999
 *      All Rights Reserved
 *
 *
 *      PURPOSE:        define entry points for
ReadWHouse.cpp
 *      Contact:    Sally Martin (sallym@microsoft.com)
 *
 *  Change history:
 *              4/25/00 - initial version
 */

int GetWareHouseTable(void **ppWareHouseArray, // array of ints
                                                int *piCount,
                                                int
*piTotalWhs,
                                                LPCSTR
szUser,         // user name for login
                                                LPCSTR
szPassword,     // password for login
                                                LPCSTR
szDSN                   // name of DSN to use
);
```

rtetime.h

```
/* FILE: rtetime.h : header file
 * Copyright 1997 Microsoft Corp., All rights reserved.
 *
 * Authors: Charles Levine, Philip Durr
 *                              Microsoft Corp.
 */

#define     MAX_JULIAN_TIME
0x7FFFFFFFFFFFFFFF
#define JULIAN_TIME         __int64
#define     TC_TIME         DWORD
extern "C"
{
BOOL            InitJulianTime(LPSYSTEMTIME lpInitTime);
JULIAN_TIME     GetJulianTime(void);
DWORD           MyTickCount(void);
void            GetJulianAndTC(JULIAN_TIME *pJulian,
DWORD *pTC);
JULIAN_TIME     ConvertTo64BitTime(int iYear, int iMonth, int
iDay, int iHour, int iMinute, int iSecond);
```

```
JULIAN_TIME     Get64BitTime(LPSYSTEMTIME lpInitTime);
int                     JulianDay( int yr, int mm, int dd );
void            JulianToTime(JULIAN_TIME julianTS, int* yr,
int* mm, int* dd, int *hh, int *mi, int *ss );
void            JulianToCalendar( int day, int* yr, int* mm, int*
dd );
}
```

SetAuditTime.cpp

```
/*      FILE:           ReadWHouse.cpp
 *                              Microsoft TPC-C Kit Ver.
4.20.000
 *                              Copyright Microsoft,
1999
 *      All Rights Reserved
 *
 *
 *      PURPOSE:        define entry points for
ReadWHouse.cpp
 *      Contact:    Sally Martin (sallym@microsoft.com)
 *
 *  Change history:
 *              4/25/00 - initial version
 */

#include <windows.h>
#include <stdio.h>

#include <stdlib.h> // db2

#include <assert.h>
#include <time.h>

#define DBNTWIN32
#define DB2NT
#include <sql.h>

#include <sqlcli.h>
#include <sqlcli1.h>

#define DB2OUT "C:\\TMP\\"  //db2
#include "sqlenv.h"     //db2
//#include "lval.h"                     //db2
#include "sqlca.h"      //db2


#define SQLSUCCEEDED(rc) (rc == SQL_SUCCESS || rc ==
SQL_SUCCESS_WITH_INFO || rc == SQL_NO_DATA)


// forward decl of routine
static int ProcessError(SQLHANDLE henv, SQLHDBC hdbc,
SQLHSTMT hstmt);
static void WriteMessageToEventLog(LPTSTR lpszMsg);
void ConvertTime(TIMESTAMP_STRUCT *tsTime, __int64 iTime);
__int64 TPCC_GetTime(void);
int SetAuditTime(       LPCSTR szUser,                  // user name
for login
                                                        LPCSTR
szPassword,             // password for login
                                                        LPCSTR
szDSN                           // name of DSN to use
);
// begin code
int main(int argc, TCHAR* argv[])
{
        SetAuditTime("tpcc","tpcc","tpcc");
}
int SetAuditTime(       LPCSTR szUser,                  // user name
for login
                                                        LPCSTR
szPassword,             // password for login
                                                        LPCSTR
szDSN                           // name of DSN to use
)
{
        // this routine opens the local database and queries it for the
list
        // of local warehouses
        // it allocates space and builds an array of those warehouse
ids.
        // first get the number of ids, and allocate the space required
        // the second query gets the actual numbers
        //SELECT W_ID FROM WAREHOUSE WHERE
NODENUMBER(W_ID)= CURRENT NODE ORDER BY W_ID
        //SELECT COUNT (*) FROM WAREHOUSE WHERE
NODENUMBER(W_ID)= CURRENT NODE
        // initialization
        unsigned char           szSQLStmt[1024];
        RETCODE                                 rc;
        int                                     *pArray =
NULL;
        SQLHDBC                                 hdbc =
SQL_NULL_HDBC;
        SQLHSTMT                        hstmt =
SQL_NULL_HSTMT;
        SQLHANDLE                       henv = 0;
        TIMESTAMP_STRUCT tsTime1;
         __int64    Auditdate_time;

        rc=SQLSetEnvAttr(henv,
                SQL_ATTR_CONNECTION_POOLING,
                SQL_CP_OFF ,
                0);

        if (!SQLSUCCEEDED(rc))
                return ProcessError(henv,hdbc,hstmt);

        if( SQLAllocEnv(&henv) != SQL_SUCCESS)
                return ProcessError(henv,hdbc,hstmt);

        if( SQLAllocConnect(henv, &hdbc)!= SQL_SUCCESS)
                return ProcessError(henv,hdbc,hstmt);

        //
        //  Set AUTOCOMMIT OFF
        //
        if( SQLSetConnectOption(hdbc, SQL_AUTOCOMMIT,
SQL_AUTOCOMMIT_OFF)!=SQL_SUCCESS)
                return ProcessError(henv,hdbc,hstmt);

        //
        // set isolation
        //
        if ( SQLSetConnectAttr(hdbc,
SQL_ATTR_TXN_ISOLATION,
(SQLPOINTER)SQL_TXN_SERIALIZABLE,0) != SQL_SUCCESS )
                return ProcessError(henv,hdbc,hstmt);

        //
        //  Connect to db
        //
        {
```

```
                char
szConnectStr[256];
                char
szOutStr[1024];
                SQLSMALLINT             iOutStrLen;

                sprintf( szConnectStr,
"UID=%s;PWD=%s;DSN=%s", szUser, szPassword, szDSN );

                rc = SQLDriverConnect(hdbc, NULL,
(SQLCHAR*)szConnectStr, sizeof(szConnectStr),
                        (SQLCHAR*)szOutStr,
sizeof(szOutStr), &iOutStrLen, SQL_DRIVER_NOPROMPT );
                if (rc != SQL_SUCCESS && rc !=
SQL_SUCCESS_WITH_INFO)
                return ProcessError(henv,hdbc,hstmt);

                if ( SQLSetConnectOption(hdbc,
SQL_CURSOR_HOLD, SQL_CURSOR_HOLD_OFF) !=
SQL_SUCCESS)
                return ProcessError(henv,hdbc,hstmt);
        }


        rc = SQLAllocStmt(hdbc, &hstmt);
        if (!SQLSUCCEEDED(rc)) return
ProcessError(henv,hdbc,hstmt);
        wsprintf((char *)szSQLStmt, "DELETE FROM AUDIT");
        // exec the command
        rc = SQLExecDirect(hstmt, szSQLStmt, SQL_NTS);
        if (!SQLSUCCEEDED(rc)) return
ProcessError(henv,hdbc,hstmt);


        SQLFreeStmt(hstmt, SQL_CLOSE);
        if (!SQLSUCCEEDED(rc))
        {
                return ProcessError(henv,hdbc,hstmt);
        }

        rc = SQLAllocStmt(hdbc, &hstmt);
        if (!SQLSUCCEEDED(rc)) return
ProcessError(henv,hdbc,hstmt);


        wsprintf((char *)szSQLStmt, "INSERT INTO AUDIT
VALUES (?");
        Auditdate_time = TPCC_GetTime();
        // convert the date
        ConvertTime(&tsTime1,Auditdate_time);

        // bind the columns
        rc = SQLBindCol(hstmt, 1, SQL_C_UBIGINT, &tsTime1,
0, NULL);
        if (!SQLSUCCEEDED(rc)) return
ProcessError(henv,hdbc,hstmt);


        // exec the command
        rc = SQLExecDirect(hstmt, szSQLStmt, SQL_NTS);
        if (!SQLSUCCEEDED(rc)) return
ProcessError(henv,hdbc,hstmt);


        SQLFreeStmt(hstmt, SQL_CLOSE);
        if (!SQLSUCCEEDED(rc))
        {
                return ProcessError(henv,hdbc,hstmt);
        }


        // commit all transactions
        rc = SQLEndTran(SQL_HANDLE_ENV,
                                        henv,
SQL_COMMIT);

        if (!SQLSUCCEEDED(rc))
        {
                return ProcessError(henv,hdbc,hstmt);
        }


        // cleanup


        rc=SQLDisconnect(hdbc);
        if (!SQLSUCCEEDED(rc)) return
ProcessError(henv,hdbc,hstmt);
        rc=SQLFreeHandle(SQL_HANDLE_DBC,hdbc);
        if (!SQLSUCCEEDED(rc)) return
ProcessError(henv,hdbc,hstmt);
        rc=SQLFreeEnv(henv);
        if (!SQLSUCCEEDED(rc)) return
ProcessError(henv,hdbc,hstmt);

        return (ERROR_SUCCESS);

}

static int ProcessError(SQLHANDLE henv, SQLHDBC hdbc,
SQLHSTMT hstmt)
{
        RETCODE                 rc;
        SDWORD          lNativeError;
        char            szState[6];
        char
szMsg[SQL_MAX_MESSAGE_LENGTH];
        char
szTmp[6*SQL_MAX_MESSAGE_LENGTH];

        szTmp[0] = 0;
        while (TRUE)
        {
                rc = SQLError(henv, hdbc, hstmt, (BYTE
*)&szState, &lNativeError,
                                                (BYTE
*)&szMsg, sizeof(szMsg), NULL);
                if (rc == SQL_NO_DATA)
                        break;

                // quit if there isn't enough room to concatenate
error text
                if ( (strlen(szMsg) + 2) > (sizeof(szTmp) -
strlen(szTmp)) )
                        break;

                // include line break after first error msg
                if (szTmp[0] != 0)
                        strcat( szTmp, "\n");
                strcat( szTmp, szMsg );
        }


        if (strlen(szTmp) > 0)
        {
```

```
                WriteMessageToEventLog( szTmp );
        }

        // cleanup
        SQLFreeStmt(hstmt, SQL_CLOSE);
        SQLDisconnect(hdbc);
        SQLFreeHandle(SQL_HANDLE_DBC,hdbc);

        return (E_FAIL);
}

static void WriteMessageToEventLog(LPTSTR lpszMsg)
{
   TCHAR   szMsg[256];
   HANDLE  hEventSource;
   LPTSTR  lpszStrings[2];

   // Use event logging to log the error.
   //
   hEventSource = RegisterEventSource(NULL,
TEXT("TPCC.DLL"));

   sprintf(szMsg, TEXT("Error in ReadWHouse.DLL: "));
   lpszStrings[0] = szMsg;
   lpszStrings[1] = lpszMsg;

   if (hEventSource != NULL)
        {
      ReportEvent(hEventSource, // handle of event source
        EVENTLOG_ERROR_TYPE,  // event type
        0,              // event category
        0,              // event ID
        NULL,           // current user's SID
        2,              // strings in  lpszStrings
        0,              // no bytes of raw data
        (LPCTSTR *)lpszStrings,    // array of error strings
        NULL);          // no raw data

      (VOID) DeregisterEventSource(hEventSource);
   }
}

void ConvertTime(TIMESTAMP_STRUCT *tsTime, __int64 iTime)
{

        union
        {
                __int64 i64Date;
                FILETIME ftDate;
        } comboDate;

        SYSTEMTIME sysTime;

        comboDate.i64Date=iTime;


        BOOL ret = FileTimeToSystemTime(&comboDate.ftDate,
&sysTime);

        tsTime->year = sysTime.wYear;
        tsTime->month = sysTime.wMonth;
        tsTime->day = sysTime.wDay;
        tsTime->hour = sysTime.wHour;
        tsTime->minute = sysTime.wMinute;
        tsTime->second = sysTime.wSecond;
        tsTime->fraction = sysTime.wMilliseconds/1000;

        return;
}

__int64 TPCC_GetTime(void)
{
        union
        {
                __int64 i64Date;
                FILETIME ftDate;
        } retValDate;

        SYSTEMTIME sysTime;

        GetLocalTime(&sysTime);

        SystemTimeToFileTime(&sysTime,&retValDate.ftDate );
        return retValDate.i64Date;
}
```

spinlock.h

```
/*      FILE: SPINLOCK.H
 *
 * Copyright 1997 Microsoft Corp., All rights reserved.
 *
 * Authors: Mike Parkes, Charles Levine, Philip Durr
 *                                  Microsoft Corp.
 */

#ifndef _INC_Spinlock

        const LONG LockClosed       = 1;
        const LONG LockOpen                 = 0;


/*********************************************************
******
        *
        *  Spinlock and Semaphore locking.
        *
        *  This class provides a very conservative locking scheme.

        *  The assumption behind the code is that locks will be

        *  held for a very short time.  When a lock is taken a
memory
        *  location is exchanged.  All other threads that want this
        *  lock wait by spinning and sometimes sleeping on a
semaphore
        *  until it becomes free again.  The only other choice is not

        *  to wait at all and move on to do something else.  This
        *  module should normally be used in conjunction with
cache
        *  aligned memory in minimize cache line misses.
        *

*********************************************************
*****/

        class Spinlock
        {
                // Private data.
                HANDLE          Semaphore;
                volatile LONG   m_Spinlock;
                volatile LONG   Waiting;
```

```
                #ifdef _DEBUG
                        // Counters for debugging builds.
                        volatile LONG   TotalLocks;
                        volatile LONG   TotalSleeps;
                        volatile LONG   TotalSpins;
                        volatile LONG   TotalWaits;
                #endif

                public:
                        // Public functions.

                        Spinlock( void );

                        inline BOOL ClaimLock( BOOL
Wait = TRUE );
                        inline void ReleaseLock( void );
                        ~Spinlock( void );
                        // Disabled operations.
                        Spinlock( const Spinlock & Copy );
                        void operator=( const Spinlock &
Copy );

                private:
                        // Private functions.
                        inline BOOL ClaimSpinlock( volatile
LONG *sl );
                        void WaitForLock( void );
                        void WakeAllSleepers( void );
        };


/*******************************************************
*****
        *
        *   A guaranteed atomic exchange.
        *
        *   An attempt is made to claim the Spinlock.  This action
is
        *   guaranteed to be atomic.
        *


*******************************************************
****/

        inline BOOL Spinlock::ClaimSpinlock( volatile LONG
*Spinlock )
        {
                #ifdef _DEBUG
                        InterlockedIncrement( (LPLONG) &
TotalLocks );
                #endif
                return ( ((*Spinlock) == LockOpen) &&
(InterlockedExchange( (LPLONG)Spinlock, LockClosed ) ==
LockOpen) );
        }


/*****************************************************
        *
        *   Claim the Spinlock.
        *
        *   Claim the lock if available else wait or exit.
        *

*****************************************************/

        inline BOOL Spinlock::ClaimLock( BOOL Wait )
        {
                if ( ! ClaimSpinlock( (volatile LONG*) &
m_Spinlock ) )
                {
                        if ( Wait )
                                WaitForLock();
                        return Wait;
                }
                return TRUE;
        }


/*****************************************************
        *
        *   Release the Spinlock.
        *
        *   Release the lock and if needed wakeup any sleepers.
        *

*****************************************************/

        inline void Spinlock::ReleaseLock( void )
        {
                m_Spinlock = LockOpen;
                if ( Waiting > 0 )
                        WakeAllSleepers();
        }

        #define _INC_Spinlock

#endif
```

tpcc.cpp

```
/*      FILE:           TPCC.C
 *                              Microsoft TPC-C Kit Ver.
4.20.000
 *                              Copyright Microsoft,
1999
 *      All Rights Reserved
 *
 *                              Version 4.10.000 audited
by Richard Gimarc, Performance Metrics, 3/17/99
 *
 *      PURPOSE:        Main module for TPCC.DLL which
is an ISAPI service dll.
 *      Contact:    Charles Levine (clevine@microsoft.com)
 *
 *  Change history:
 *                      4.20.000 - reworked error handling; added
options for COM and Encina txn monitors
 */

#include <windows.h>
#include <process.h>
#include <tchar.h>
#include <stdio.h>
#include <stdarg.h>
#include <malloc.h>
#include <stdlib.h>
#include <string.h>
#include <time.h>
#include <sys\timeb.h>
#include <io.h>
#include <assert.h>
```

```
#include <sqltypes.h>

#ifdef ICECAP
#include <icapexp.h>
#endif

#include "..\..\common\src\trans.h"                    //tpckit
transaction header contains definations of structures specific to TPC-C
#include "..\..\common\src\error.h"
#include "..\..\common\src\txn_base.h"
#include "..\..\common\src\ReadRegistry.h"

#include "..\..\common\txnlog\include\rtetime.h"
#include "..\..\common\txnlog\include\spinlock.h"
#include "..\..\common\txnlog\include\txnlog.h"

// Database layer includes
#include "..\..\db_dblib_dll\src\tpcc_dblib.h"                 //
DBLIB implementation of TPC-C txns
#include "..\..\db_odbc_dll\src\tpcc_odbc.h"           // ODBC
implementation of TPC-C txns

// Txn monitor layer includes
#include "..\..\tm_com_dll\src\tpcc_com.h"                     //
COM Services implementation on TPC-C txns
#include "..\..\tm_tuxedo_dll\src\tpcc_tux.h"          // interface to
Tuxedo libraries
#include "..\..\tm_encina_dll\src\tpcc_enc.h"          // interface to
Encina libraries

#include "httpext.h"                                   //ISAPI DLL
information header
#include "tpcc.h"
//this dlls specific structure, value e.t. header.


#define     LEN_ERR_STRING  256

// defines for Make<Txn>Form calls to distinguish input and output
flavors
#define     OUTPUT_FORM     0
#define INPUT_FORM          1
#define EOL 10

char
szMyComputerName[MAX_COMPUTERNAME_LENGTH+1];

//Terminal client id structure
TERM      Term = { 0, 0, 0, NULL };

// The WEBCLIENT_VERSION string specifies the version level of
this web client interface.
// The RTE must be synchronized with the interface level on login,
otherwise the login
// will fail.  This is a sanity check to catch problems resulting from
mismatched versions
// of the RTE and web client.
#define WEBCLIENT_VERSION "430"

static        CRITICAL_SECTION
TermCriticalSection;

static  HINSTANCE hLibInstanceTm = NULL;
static  HINSTANCE hLibInstanceDb = NULL;

TYPE_CTPCC_DBLIB          *pCTPCC_DBLIB_new;
TYPE_CTPCC_ODBC                 *pCTPCC_ODBC_new;
TYPE_CTPCC_TUXEDO         *pCTPCC_TUXEDO_new;
TYPE_CTPCC_ENCINA   *pCTPCC_ENCINA_new;
TYPE_CTPCC_ENCINA   *pCTPCC_ENCINA_post_init;
TYPE_CTPCC_COM            *pCTPCC_COM_new;

// For deferred Delivery txns:

CTxnLog                                        *txnDelilog =
NULL;                        //used to log delivery transaction
information

HANDLE
hWorkerSemaphore    = INVALID_HANDLE_VALUE;
HANDLE                                         hDoneEvent
                    = INVALID_HANDLE_VALUE;
HANDLE                                         *pDeliHandles
          = NULL;

// configuration settings from registry
TPCCREGISTRYDATA                    Reg;


DWORD
dwNumDeliveryThreads = 4;
CRITICAL_SECTION                    DelBuffCriticalSection;
          //critical section for delivery transactions cache
DELIVERY_TRANSACTION   *pDelBuff                    =
NULL;
DWORD                                          dwDelBuffSize
          = 100;              // size of circular buffer for delivery
txns
DWORD
dwDelBuffFreeCount;                            // number of
buffers free
DWORD
dwDelBuffBusyIndex = 0;                        // index position of entry
waiting to be delivered
DWORD
dwDelBuffFreeIndex  = 0;                       // index position of unused
entry

#define MAXWHS                         60001
BYTE
*pbLocalWhsTbl=NULL;
#ifdef COUNTSPLIT
LONG
gdwLocalNOCnt = 0;
LONG
gdwRemoteNOCnt= 0;
LONG
gdwLocalPayCnt = 0;
LONG
gdwRemotePayCnt= 0;
#endif



#include "..\..\common\src\ReadRegistry.cpp"
#include "ReadWHouse.h"


/* FUNCTION: DllMain
 *
 * PURPOSE:          This function is the entry point for the DLL.
This implementation is based on the
 *                                fact that DLL_PROCESS_ATTACH
is only called from the inet service once.
 *
```

```
 * ARGUMENTS:     HANDLE hModule
module handle
 *                                      DWORD
ul_reason_for_call      reason for call
 *                                      LPVOID   lpReserved
        reserved for future use
 *
 * RETURNS:                     BOOL     FALSE
        errors occured in initialization
 *
TRUE                                    DLL successfully
initialized
 */

BOOL APIENTRY DllMain(HANDLE hModule, DWORD
ul_reason_for_call, LPVOID lpReserved)
{
        DWORD  i;
        char szEvent[LEN_ERR_STRING] = "\0";
        char szLogFile[128];
        char szDllName[128];
        BOOL     fComment = FALSE;
        int                     cbSize=0;
        int  iWhs = 0;
        int *pWareHouseArray=NULL;
        int iCount = 0;
        int iLoop=0;
        int iTotalWhs=0;

        try
        {
                switch( ul_reason_for_call )
                {
                        case DLL_PROCESS_ATTACH:
                                {
                                        DWORD
dwSize = MAX_COMPUTERNAME_LENGTH+1;

GetComputerName(szMyComputerName, &dwSize);

szMyComputerName[dwSize] = 0;
                                }


DisableThreadLibraryCalls((HMODULE)hModule);

InitializeCriticalSection(&TermCriticalSection);

                                if (
ReadTPCCRegistrySettings( &Reg ) )
                                        throw new
CWEBCLNT_ERR( ERR_MISSING_REGISTRY_ENTRIES);

                                dwDelBuffSize = min(
Reg.dwMaxPendingDeliveries, 10000 );  // min with 10000 as a sanity
constraint
                                dwNumDeliveryThreads =
min( Reg.dwNumberOfDeliveryThreads, 100 );  // min with 100 as a
sanity constraint

                                TermInit();

                                // load DLL for txn
monitor
                                if (Reg.eTxnMon ==
TUXEDO)
                                {
                                        strcpy(
szDllName, Reg.szPath );
                                        strcat(
szDllName, "tpcc_tuxedo.dll");

hLibInstanceTm = LoadLibrary( szDllName );
                                        if
(hLibInstanceTm == NULL)

throw new CWEBCLNT_ERR( ERR_LOADDLL_FAILED,
szDllName, GetLastError() );

                                        // get function
pointer to wrapper for class constructor

pCTPCC_TUXEDO_new = (TYPE_CTPCC_TUXEDO*)
GetProcAddress(hLibInstanceTm,"CTPCC_TUXEDO_new");
                                        if
(pCTPCC_TUXEDO_new == NULL)

throw new CWEBCLNT_ERR( ERR_GETPROCADDR_FAILED,
szDllName, GetLastError() );
                                }
                                else if (Reg.eTxnMon ==
ENCINA)
                                {
                                        strcpy(
szDllName, Reg.szPath );
                                        strcat(
szDllName, "tpcc_encina.dll");

hLibInstanceTm = LoadLibrary( szDllName );
                                        if
(hLibInstanceTm == NULL)

throw new CWEBCLNT_ERR( ERR_LOADDLL_FAILED,
szDllName, GetLastError() );
                                        // get function
pointer to wrapper for class constructor

pCTPCC_ENCINA_new = (TYPE_CTPCC_ENCINA*)
GetProcAddress(hLibInstanceTm,"CTPCC_ENCINA_new");

pCTPCC_ENCINA_post_init = (TYPE_CTPCC_ENCINA*)
GetProcAddress(hLibInstanceTm,"CTPCC_ENCINA_post_init");
                                        if
(pCTPCC_ENCINA_new == NULL)

throw new CWEBCLNT_ERR( ERR_GETPROCADDR_FAILED,
szDllName, GetLastError() );
                                }
                                else if (Reg.eTxnMon ==
COM)
                                {
                                        strcpy(
szDllName, Reg.szPath );
                                        strcat(
szDllName, "tpcc_com.dll");

hLibInstanceTm = LoadLibrary( szDllName );
                                        if
(hLibInstanceTm == NULL)

throw new CWEBCLNT_ERR( ERR_LOADDLL_FAILED,
szDllName, GetLastError() );

                                        // get function
pointer to wrapper for class constructor
```

```
pCTPCC_COM_new = (TYPE_CTPCC_COM*)
GetProcAddress(hLibInstanceTm,"CTPCC_COM_new");
                                                    if
(pCTPCC_COM_new == NULL)

throw new CWEBCLNT_ERR( ERR_GETPROCADDR_FAILED,
szDllName, GetLastError() );




GetWareHouseTable(
                                                     (void
**)&pWareHouseArray, // array of ints
                                                     &iCount,
                                                     &iTotalWhs,

Reg.szDbUser,                  // user name for login

Reg.szDbPassword,    // password for login

Reg.szDbName);                          // name of DSN to use


pbLocalWhsTbl = (BYTE *)malloc(sizeof(BYTE)*iTotalWhs + 1);
                                                    if
(!pbLocalWhsTbl)

throw new CWEBCLNT_ERR( ERR_GETPROCADDR_FAILED,
szDllName, GetLastError() );


memset((void*)pbLocalWhsTbl,0,sizeof(BYTE)*iTotalWhs + 1);



                                                    for
(iLoop=0;iLoop<iCount;iLoop++)
                                                    {

                                                          if
(pWareHouseArray[iLoop] < (int)iTotalWhs)

pbLocalWhsTbl[pWareHouseArray[iLoop]] = 1;//local warehouse

                                                    }

free((void*)pWareHouseArray);

                                               }

                                               // load DLL for database
connection
                                               if ((Reg.eTxnMon ==
None) || (dwNumDeliveryThreads > 0))
                                               {
                                                    if
(Reg.eDB_Protocol == DBLIB)
                                                    {

strcpy( szDllName, Reg.szPath );

strcat( szDllName, "tpcc_dblib.dll");

hLibInstanceDb = LoadLibrary( szDllName );
                                                                    if
(hLibInstanceDb == NULL)

throw new CWEBCLNT_ERR( ERR_LOADDLL_FAILED,
szDllName, GetLastError() );

                                                                    //
get function pointer to wrapper for class constructor

pCTPCC_DBLIB_new = (TYPE_CTPCC_DBLIB*)
GetProcAddress(hLibInstanceDb,"CTPCC_DBLIB_new");
                                                                    if
(pCTPCC_DBLIB_new == NULL)

throw new CWEBCLNT_ERR( ERR_GETPROCADDR_FAILED,
szDllName, GetLastError() );
                                                                    }
                                                                    else if
(Reg.eDB_Protocol == ODBC)
                                                                    {

strcpy( szDllName, Reg.szPath );

strcat( szDllName, "tpcc_odbc.dll");

hLibInstanceDb = LoadLibrary( szDllName );
                                                                    if
(hLibInstanceDb == NULL)

throw new CWEBCLNT_ERR( ERR_LOADDLL_FAILED,
szDllName, GetLastError() );

                                                                    //
get function pointer to wrapper for class constructor

pCTPCC_ODBC_new = (TYPE_CTPCC_ODBC*)
GetProcAddress(hLibInstanceDb,"CTPCC_ODBC_new");
                                                                    if
(pCTPCC_ODBC_new == NULL)

throw new CWEBCLNT_ERR( ERR_GETPROCADDR_FAILED,
szDllName, GetLastError() );
                                                                    }

                                                          }

                                                          if
(dwNumDeliveryThreads)
                                                          {
                                                                    // for deferred
delivery txns:
                                                                    hDoneEvent =
CreateEvent( NULL, TRUE /* manual reset */, FALSE /* initially not
signalled */, NULL );

InitializeCriticalSection(&DelBuffCriticalSection);

hWorkerSemaphore = CreateSemaphore( NULL, 0, dwDelBuffSize,
NULL );

dwDelBuffFreeCount = dwDelBuffSize;


InitJulianTime(NULL);

                                                                    // create unique
log file name based on delilog-yymmdd-hhmm.log
```

```
SYSTEMTIME Time;
                                                GetLocalTime(
&Time );
                                                wsprintf(
szLogFile, "%sdelivery-%2.2d%2.2d%2.2d-%2.2d%2.2d.log",

 Reg.szPath, Time.wYear % 100, Time.wMonth, Time.wDay,
Time.wHour, Time.wMinute );
                                                txnDelilog =
new CTxnLog(szLogFile, TXN_LOG_WRITE);

                                                //write event
into txn log for START

txnDelilog->WriteCtrlRecToLog(TXN_EVENT_START,
szMyComputerName, sizeof(szMyComputerName));

                                                // allocate
structures for delivery buffers and thread mgmt
                                                pDeliHandles
= new HANDLE[dwNumDeliveryThreads];
                                                pDelBuff =
new DELIVERY_TRANSACTION[dwDelBuffSize];
                                                // launch
DeliveryWorkerThread to perform actual delivery txns
                                                for(i=0;
i<dwNumDeliveryThreads; i++)
                                                {

pDeliHandles[i] = (HANDLE) _beginthread( DeliveryWorkerThread,
0, NULL );
                                                        if
(pDeliHandles[i] == INVALID_HANDLE_VALUE)

throw new CWEBCLNT_ERR(
ERR_DELIVERY_THREAD_FAILED);
                                                }
                                        }

                                        break;

                                case DLL_PROCESS_DETACH:
                                        if
(dwNumDeliveryThreads)
                                        {
                                                if (txnDelilog
!= NULL)
                                                {

//write event into txn log for STOP

txnDelilog->WriteCtrlRecToLog(TXN_EVENT_STOP,
szMyComputerName, sizeof(szMyComputerName));

                                                        //
This will do a clean shutdown of the delivery log file

CTxnLog  *txnDelilogLocal = txnDelilog;

txnDelilog= NULL;

delete txnDelilogLocal;
                                                }

                                                delete []
pDeliHandles;
                                                delete []
pDelBuff;

                                                CloseHandle(
hWorkerSemaphore );
                                                CloseHandle(
hDoneEvent );

DeleteCriticalSection(&DelBuffCriticalSection);
                                        }


DeleteCriticalSection(&TermCriticalSection);

                                        if (hLibInstanceTm !=
NULL)
                                                FreeLibrary(
hLibInstanceTm );
                                        hLibInstanceTm = NULL;

                                        if (hLibInstanceDb !=
NULL)
                                                FreeLibrary(
hLibInstanceDb );
                                        hLibInstanceDb = NULL;

                                        Sleep(500);
                                        break;

                                default:
                                        /* nothing */;
                        }
                }
                catch (CBaseErr *e)
                {
                        WriteMessageToEventLog( e->ErrorText() );
                        delete e;
                        TerminateExtension(0);
                        return FALSE;
                }
                catch (...)
                {
                        WriteMessageToEventLog(TEXT("Unhandled
exception.  DLL could not load."));
                        TerminateExtension(0);
                        return FALSE;
                }

                return TRUE;
}


/* FUNCTION: GetExtensionVersion
 *
 * PURPOSE:             This function is called by the inet service when
the DLL is first loaded.
 *
 * ARGUMENTS:     HSE_VERSION_INFO             *pVer
passed in structure in which to place expected version number.
 *
 * RETURNS:                     TRUE       inet service expected
return value.
 */

BOOL WINAPI GetExtensionVersion(HSE_VERSION_INFO *pVer)
{
                pVer->dwExtensionVersion =
MAKELONG(HSE_VERSION_MINOR, HSE_VERSION_MAJOR);
```

```
	lstrcpyn(pVer->lpszExtensionDesc, "TPC-C Server.",
HSE_MAX_EXT_DLL_NAME_LEN);

	// TODO: why do we need this here instead of in the DLL
attach?
	if (Reg.eTxnMon == ENCINA)
		pCTPCC_ENCINA_post_init();

	return TRUE;
}

/* FUNCTION: TerminateExtension
 *
 * PURPOSE:		This function is called by the inet service when
the DLL is about to be unloaded.
 *				Release all resources in anticipation
of being unloaded.
 *
 * RETURNS:		TRUE	inet service expected
return value.
 */

BOOL WINAPI TerminateExtension( DWORD dwFlags )
{
	if (pDeliHandles)
	{
		SetEvent( hDoneEvent );
		for(DWORD i=0; i<dwNumDeliveryThreads;
i++)
			WaitForSingleObject(
pDeliHandles[i], INFINITE );
	}

	TermDeleteAll();
	return TRUE;
}


/* FUNCTION: HttpExtensionProc
 *
 * PURPOSE:		This function is the main entry point for the
TPCC DLL. The internet service
 *				calls this function passing in the http
string.
 *
 * ARGUMENTS:	EXTENSION_CONTROL_BLOCK
*pECB	structure pointer to passed in internet
 *
 *
service
information.
 *
 * RETURNS:		DWORD
HSE_STATUS_SUCCESS
connection can be dropped if error
 *
HSE_STATUS_SUCCESS_AND_KEEP_CONN	keep connect
valid comment sent
 *
 * COMMENTS:	None
 *
 */

DWORD WINAPI
HttpExtensionProc(EXTENSION_CONTROL_BLOCK *pECB)
{
	int				iCmd, FormId, TermId,
iSyncId;
	char			szBuffer[4096];
	int				lpbSize;
	static char	szHeader[] = "200 Ok";
	DWORD		dwSize = 6;			//
initial value is strlen(szHeader)
	char		szHeader1[4096];


#ifdef ICECAP
	StartCAP();
#endif

	try
	{
		//process http query
		ProcessQueryString(pECB, &iCmd, &FormId,
&TermId, &iSyncId);

		if (TermId != 0)
		{
			if ( TermId < 0 || TermId >=
Term.iNumEntries || Term.pClientData[TermId].iNextFree != -1 )
			{
				// debugging...
				char szTmp[128];
				wsprintf( szTmp, "Invalid
term ID; TermId = %d", TermId );

WriteMessageToEventLog( szTmp );

				throw new
CWEBCLNT_ERR( ERR_INVALID_TERMID );
			}

			//must have a valid syncid here since
termid is valid
			if (iSyncId !=
Term.pClientData[TermId].iSyncId)
				throw new
CWEBCLNT_ERR( ERR_INVALID_SYNC_CONNECTION);

			//set use time

Term.pClientData[TermId].iTickCount = GetTickCount();
		}


		switch(iCmd)
		{
		case 0:
			WelcomeForm(pECB, szBuffer);
			break;
		case 1:
			switch( FormId )
			{
				case WELCOME_FORM:
				case
MAIN_MENU_FORM:
					break;
				case
NEW_ORDER_FORM:

ProcessNewOrderForm(pECB, TermId, szBuffer);
					break;
				case PAYMENT_FORM:

ProcessPaymentForm(pECB, TermId, szBuffer);
					break;
```

```
                                        case DELIVERY_FORM:
ProcessDeliveryForm(pECB, TermId, szBuffer);
                                                break;
                                        case
ORDER_STATUS_FORM:
ProcessOrderStatusForm(pECB, TermId, szBuffer);
                                                break;
                                        case
STOCK_LEVEL_FORM:
ProcessStockLevelForm(pECB, TermId, szBuffer);
                                                break;
                                }
                                break;
                        case 2:
                                // new-order selected from menu;
display new-order input form
                                MakeNewOrderForm(TermId, NULL,
INPUT_FORM, szBuffer);
                                break;
                        case 3:
                                // payment selected from menu;
display payment input form
                                MakePaymentForm(TermId, NULL,
INPUT_FORM, szBuffer);
                                break;
                        case 4:
                                // delivery selected from menu;
display delivery input form
                                MakeDeliveryForm(TermId, NULL,
INPUT_FORM, szBuffer);
                                break;
                        case 5:
                                // order-status selected from menu;
display order-status input form
                                MakeOrderStatusForm(TermId,
NULL, INPUT_FORM, szBuffer);
                                break;
                        case 6:
                                // stock-level selected from menu;
display stock-level input form
                                MakeStockLevelForm(TermId,
NULL, INPUT_FORM, szBuffer);
                                break;
                        case 7:
                                // ExitCmd
                                TermDelete(TermId);
                                WelcomeForm(pECB, szBuffer);
                                break;
                        case 8:
                                SubmitCmd(pECB, szBuffer);
                                break;
                        case 9:
                                // menu
                                MakeMainMenuForm(TermId,
Term.pClientData[TermId].iSyncId, szBuffer);
                                break;
                        case 10:
                                // CMD=Clear
                                // resets all connections; should only
be used when no other connections are active
                                TermDeleteAll();
                                TermInit();
                                WelcomeForm(pECB, szBuffer);
                                break;
                        case 11:    // CMD=Stats
                                StatsCmd(pECB, szBuffer);
                                break;
                        }
                }
                catch (CBaseErr *e)
                {
                        ErrorForm( pECB, e->ErrorType(),
e->ErrorNum(), TermId, iSyncId, e->ErrorText(), szBuffer );
                        delete e;
                }
                catch (...)
                {
                        ErrorForm( pECB, ERR_TYPE_WEBDLL, 0,
TermId, iSyncId, "Error: Unhandled exception in Web Client.",
szBuffer );
                }

#ifdef ICECAP
                StopCAP();
#endif


                lpbSize = strlen(szBuffer);
                wsprintf(szHeader1,
                                "Content-Type: text/html\r\n"
                                "Content-Length: %d\r\n"
                                "Connection: Keep-Alive\r\n\r\n" ,
lpbSize);
                strcat( szHeader1, szBuffer );

                (*pECB->ServerSupportFunction)(pECB->ConnID,
HSE_REQ_SEND_RESPONSE_HEADER, szHeader, (LPDWORD)
&dwSize, (LPDWORD)szHeader1);

                //finish up and keep connection
                pECB->dwHttpStatusCode = 200;
                return HSE_STATUS_SUCCESS_AND_KEEP_CONN;
}


void WriteMessageToEventLog(LPTSTR lpszMsg)
{
   TCHAR   szMsg[256];
   HANDLE  hEventSource;
   LPTSTR  lpszStrings[2];

   // Use event logging to log the error.
   //
   hEventSource = RegisterEventSource(NULL,
TEXT("TPCC.DLL"));

   _stprintf(szMsg, TEXT("Error in TPCC.DLL: "));
   lpszStrings[0] = szMsg;
   lpszStrings[1] = lpszMsg;

   if (hEventSource != NULL)
           {
      ReportEvent(hEventSource, // handle of event source
         EVENTLOG_ERROR_TYPE,  // event type
         0,                    // event category
         0,                    // event ID
         NULL,                 // current user's SID
         2,                    // strings in  lpszStrings
         0,                    // no bytes of raw data
         (LPCTSTR *)lpszStrings,    // array of error strings
         NULL);                // no raw data

      (VOID) DeregisterEventSource(hEventSource);
```

```
    }
}


/* FUNCTION: DeliveryWorkerThread
 *
 * PURPOSE:          This function processes deferred delivery txns.
There are typically several
 *                   threads running this routine.  The
number of threads is determined by an entry
 *                   read from the registry.  The thread
waits for work by waiting on semaphore.
 *                   When a delivery txn is posted, the
semaphore is released.  After processing
 *                   the delivery txn, information is
logged to record the txn status and execution
 *                   time.
 */

/*static*/ void DeliveryWorkerThread(void *ptr)
{
        CTPCC_BASE              *pTxn = NULL;

        DELIVERY_TRANSACTION            delivery;
        PDELIVERY_DATA
pDeliveryData;
        TXN_RECORD_TPCC_DELIV_DEF       txnDeliRec;

        DWORD
index;
        HANDLE
handles[2];

        SYSTEMTIME              trans_end;
//delivery transaction finished time
        SYSTEMTIME              trans_start;
//delivery transaction start time
        int                                     iRetryCnt = 0;
        static int              iMaxRetries = 10;

        assert(txnDelilog != NULL);

        assert(txnDelilog != NULL);

Reconnect:
        try
        {
                if (Reg.eDB_Protocol == ODBC)
                        pTxn = pCTPCC_ODBC_new(
Reg.szDbServer, Reg.szDbUser, Reg.szDbPassword,
szMyComputerName, Reg.szDbName );
                else if (Reg.eDB_Protocol == DBLIB)
                        pTxn = pCTPCC_DBLIB_new(
Reg.szDbServer, Reg.szDbUser, Reg.szDbPassword,
szMyComputerName, Reg.szDbName );
                pDeliveryData = pTxn->BuffAddr_Delivery();
        }
        catch (CBaseErr *e)
        {
                char szTmp[1024];
                wsprintf( szTmp, "Error in Delivery Txn thread.
Could not connect to database.  "
                                "%s.  Server=%s,
User=%s, Password=%s, Database=%s",
                                e->ErrorText(),
Reg.szDbServer, Reg.szDbUser, Reg.szDbPassword, Reg.szDbName );
                WriteMessageToEventLog( szTmp );
                delete e;
                // will retry connection up to ten times
                if (iRetryCnt++ < iMaxRetries)
                {
                        Sleep(5000);            // delay for 5
seconds
                        goto Reconnect;
                }

                wsprintf( szTmp, "Delivery Txn thread
terminating after %d retries.", iMaxRetries );
                WriteMessageToEventLog( szTmp );
                goto ErrorExit;
        }
        catch (...)
        {
                WriteMessageToEventLog(TEXT("Unhandled
exception caught in DeliveryWorkerThread.  Delivery Txn thread
terminating."));
                goto ErrorExit;
        }


        while (TRUE)
        {
                try
                {
                        //while delivery thread running, i.e.
user has not requested termination
                        while (TRUE)
                        {
                                // need to wait for multiple
objects: program exit or worker semaphore;
                                handles[0] = hDoneEvent;
                                handles[1] =
hWorkerSemaphore;
                                index =
WaitForMultipleObjects( 2, &handles[0], FALSE, INFINITE );
                                if (index ==
WAIT_OBJECT_0)
                                        goto ErrorExit;


ZeroMemory(&txnDeliRec, sizeof(txnDeliRec));
                                txnDeliRec.TxnType =
TXN_REC_TYPE_TPCC_DELIV_DEF;

                                // make a local copy of
current entry from delivery buffer and increment buffer index

EnterCriticalSection(&DelBuffCriticalSection);
                                delivery =
*(pDelBuff+dwDelBuffBusyIndex);
                                dwDelBuffFreeCount++;
                                dwDelBuffBusyIndex++;
                                if (dwDelBuffBusyIndex
== dwDelBuffSize)    // wrap-around if at end of buffer

dwDelBuffBusyIndex = 0;


LeaveCriticalSection(&DelBuffCriticalSection);

                                pDeliveryData->w_id =
delivery.w_id;

pDeliveryData->o_carrier_id = delivery.o_carrier_id;
```

```
                                        txnDeliRec.w_id =
pDeliveryData->w_id;
                                        txnDeliRec.o_carrier_id =
pDeliveryData->o_carrier_id;
                                        txnDeliRec.TxnStartT0 =
Get64BitTime(&delivery.queue);

                                        GetLocalTime(
&trans_start );
                                        pTxn->Delivery();
                                        GetLocalTime(
&trans_end );

                                        //log txn
                                        txnDeliRec.TxnStatus =
ERR_SUCCESS;
                                        for (int i=0; i<10; i++)

txnDeliRec.o_id[i] = pDeliveryData->o_id[i];
                                        txnDeliRec.DeltaT4 =
(int)(Get64BitTime(&trans_end) - txnDeliRec.TxnStartT0);
                                        txnDeliRec.DeltaTxnExec
= (int)(Get64BitTime(&trans_end) - Get64BitTime(&trans_start));

                                        if (txnDelilog != NULL)

txnDelilog->WriteToLog(&txnDeliRec);
                                }
                        }
                        catch (CBaseErr *e)
                        {
                                char szTmp[1024];
                                wsprintf( szTmp, "Error in Delivery
Txn thread.  %s", e->ErrorText() );
                                WriteMessageToEventLog( szTmp );

                                // log the error txn
                                txnDeliRec.TxnStatus =
e->ErrorType();
                                if (txnDelilog != NULL)

txnDelilog->WriteToLog(&txnDeliRec);

                                delete e;
                        }
                        catch (...)
                        {
                                // unhandled exception; shouldn't
happen; not much we can do...

WriteMessageToEventLog(TEXT("Unhandled exception caught in
DeliveryWorkerThread."));
                        }
                }

ErrorExit:
                delete pTxn;
                _endthread();
}

/* FUNCTION: PostDeliveryInfo
 *
 * PURPOSE:             This function enters the delivery txn into the
deferred delivery buffer.
 *
 * RETURNS:                     BOOL       FALSE      delivery
information posted successfully
 *
TRUE       error cannot post delivery info
 */

BOOL PostDeliveryInfo(long w_id, short o_carrier_id)
{
                BOOL bError;

                EnterCriticalSection(&DelBuffCriticalSection);
                if (dwDelBuffFreeCount > 0)
                {
                        bError = FALSE;
                        (pDelBuff+dwDelBuffFreeIndex)->w_id
                = w_id;
                        (pDelBuff+dwDelBuffFreeIndex)->o_carrier_id
= o_carrier_id;

GetLocalTime(&(pDelBuff+dwDelBuffFreeIndex)->queue);

                        dwDelBuffFreeCount--;
                        dwDelBuffFreeIndex++;
                        if (dwDelBuffFreeIndex == dwDelBuffSize)
                                dwDelBuffFreeIndex = 0;
// wrap-around if at end of buffer
                }
                else
                        // No free buffers.  Return an error, which
indicates that the delivery buffer is full.
                        // Most likely, the number of delivery worker
threads needs to be increased to keep up
                        // with the txn rate.
                        bError = TRUE;
                LeaveCriticalSection(&DelBuffCriticalSection);

                if (!bError)
                        // increment worker semaphore to wake up a
worker thread
                        ReleaseSemaphore( hWorkerSemaphore, 1,
NULL );

                return bError;
}

/* FUNCTION: ProcessQueryString
 *
 * PURPOSE:             This function extracts the relevent information
out of the http command passed in from
 *                                      the browser.
 *
 * COMMENTS:        If this is the initial connection i.e. client is at
welcome screen then
 *                                                      there will not be a
terminal id or current form id.  If this is the case
 *                                                      then the pTermid and
pFormid return values are undefined.
 */

void ProcessQueryString(EXTENSION_CONTROL_BLOCK*pECB,
int *pCmd, int *pFormId, int *pTermId, int *pSyncId)
{
                char *ptr = pECB->lpszQueryString;
                char szBuffer[25];
                int i;

                //allowable client command strings i.e. CMD=command
                static char *szCmds[] =
                {
```

```
                        "Process", "..NewOrder..", "..Payment..",
"..Delivery..", "..Order-Status..", "..Stock-Level..",
                        "..Exit..", "Submit", "Menu", "Clear", "Stats", ""
        };

        *pCmd      = 0;                    // default is the login
screen
        *pTermId = 0;

        // if no params (i.e., empty query string), then return login
screen
        if (strlen(pECB->lpszQueryString) == 0)
                return;

        // parse FORMID, TERMID, and SYNCID
        *pFormId = GetIntKeyValue(&ptr, "FORMID", NO_ERR,
NO_ERR);
        *pTermId = GetIntKeyValue(&ptr, "TERMID", NO_ERR,
NO_ERR);
        *pSyncId = GetIntKeyValue(&ptr, "SYNCID", NO_ERR,
NO_ERR);

        // parse CMD
        GetKeyValue(&ptr, "CMD", szBuffer, sizeof(szBuffer),
ERR_COMMAND_UNDEFINED);

        // see which command it matches
        for(i=0; ; i++)
        {
                if (szCmds[i][0] == 0)
                        // no more; no match; return error
                        throw new CWEBCLNT_ERR(
ERR_COMMAND_UNDEFINED );
                if ( !strcmp(szCmds[i], szBuffer) )
                {
                        *pCmd = i+1;
                        break;
                }
        }
}

/* FUNCTION: void WelcomeForm
 *
 */

void WelcomeForm(EXTENSION_CONTROL_BLOCK*pECB, char
*szBuffer)
{
        char szTmp[1024];

        //welcome to tpc-c html form buffer, this is first form client
sees.
        strcpy( szBuffer,       "<HTML><HEAD><TITLE>TPC-C
Web Client</TITLE></HEAD><BODY>"

"<B><BIG>Microsoft TPC-C Web Client (ver 4.30)</BIG></B>
<BR> <BR>"

"<font face=\"Courier New\"><PRE>"

"Compiled: "__DATE__", "__TIME__" <BR>"

"Source:   "__FILE__" ("__TIMESTAMP__") <BR>"

"</PRE></font>"

"<FORM ACTION=\"tpcc.dll\" METHOD=\"GET\">"

"<INPUT TYPE=\"hidden\" NAME=\"STATUSID\" VALUE=\"0\">"

"<INPUT TYPE=\"hidden\" NAME=\"ERROR\" VALUE=\"0\">"

"<INPUT TYPE=\"hidden\" NAME=\"FORMID\" VALUE=\"1\">"

"<INPUT TYPE=\"hidden\" NAME=\"TERMID\" VALUE=\"0\">"

"<INPUT TYPE=\"hidden\" NAME=\"SYNCID\" VALUE=\"0\">"

"<INPUT TYPE=\"hidden\" NAME=\"VERSION\" VALUE=\""
WEBCLIENT_VERSION"\">"
                                );

        sprintf( szTmp,         "Configuration Settings: <BR><font
face=\"Courier New\" color=\"blue\"><PRE>"
                                        "Txn Monitor
      = <B>%s</B><BR>"
                                        "Database
protocol     = <B>%s</B><BR>"
                                        "Max
Connections       = <B>%d</B><BR>"
                                        "# of Delivery
Threads  = <B>%d</B><BR>"
                                        "Max Pending
Deliveries = <B>%d</B><BR>"
                                , szTxnMonNames[Reg.eTxnMon],
szDBNames[Reg.eDB_Protocol],
                                Reg.dwMaxConnections,
dwNumDeliveryThreads, dwDelBuffSize );
        strcat( szBuffer, szTmp);

        if (Reg.eTxnMon == COM)
        {
                sprintf( szTmp,         "COM Single Pool       =
<B>%s</B><BR>",
                                Reg.bCOM_SinglePool ? "YES" :
"NO" );
                strcat( szBuffer, szTmp);
        }
        strcat( szBuffer, "</PRE></font>");

        if (Reg.eTxnMon == None)
                // connection options may be specified when not
using a txn monitor
                sprintf( szTmp,         "Please enter your
database options for this connection:<BR>"

"<font face=\"Courier New\" color=\"blue\"><PRE>"
                                                        "DB
Server    = <INPUT NAME=\"db_server\" SIZE=20
VALUE=\"%s\"><BR>"
                                                        "DB
User ID   = <INPUT NAME=\"db_user\" SIZE=20
VALUE=\"%s\"><BR>"
                                                        "DB
Password  = <INPUT NAME=\"db_passwd\" SIZE=20
VALUE=\"%s\"><BR>"
                                                        "DB
Name      = <INPUT NAME=\"db_name\" SIZE=20
VALUE=\"%s\"><BR>"

"</PRE></font>"
                                        , Reg.szDbServer,
Reg.szDbUser, Reg.szDbPassword, Reg.szDbName );
        else
```

```
                        // if using a txn monitor, connection options are
determined from registry; can't
                        // set per user.  show options fyi
                        sprintf( szTmp,         "Database options which
will be used by the transaction monitor:<BR>"

"<font face=\"Courier New\" color=\"blue\"><PRE>"
                                                                "DB
Server          = <B>%s</B><BR>"
                                                                "DB
User ID         = <B>%s</B><BR>"
                                                                "DB
Password        = <B>%s</B><BR>"
                                                                "DB
Name            = <B>%s</B><BR>"

"</PRE></font>"
                                                , Reg.szDbServer,
Reg.szDbUser, Reg.szDbPassword, Reg.szDbName );
        strcat( szBuffer, szTmp);

        sprintf( szTmp,         "Please enter your Warehouse and
District for this session:<BR>"
                                                        "<font
face=\"Courier New\" color=\"blue\"><PRE>" );
        strcat( szBuffer, szTmp);
        strcat( szBuffer,       "Warehouse ID = <INPUT
NAME=\"w_id\" SIZE=6><BR>"

"District ID  = <INPUT NAME=\"d_id\" SIZE=2><BR>"

"</PRE></font><HR>"

"<INPUT TYPE=\"submit\" NAME=\"CMD\" VALUE=\"Submit\">"

"</FORM></BODY></HTML>");
}

/* FUNCTION: SubmitCmd
 *
 * PURPOSE:         This function allocated a new terminal id in the
Term structure array.
 *
 */

void SubmitCmd(EXTENSION_CONTROL_BLOCK *pECB, char
*szBuffer)
{
        int                     iNewTerm;
        char        *ptr = pECB->lpszQueryString;

        char        szVersion[32]       = { 0 };
        char        szServer[32]        = { 0 };
        char        szUser[32]          = "sa";
        char        szPassword[32]      = { 0 };
        char        szDatabase[32]      = "tpcc";

        // validate version field; the version field ensures that the
RTE is synchronized with the web client
        GetKeyValue(&ptr, "VERSION", szVersion,
sizeof(szVersion), ERR_VERSION_MISMATCH);
        if ( strcmp( szVersion, WEBCLIENT_VERSION ) )
                throw new CWEBCLNT_ERR(
ERR_VERSION_MISMATCH );

        if (Reg.eTxnMon == None)
        {
                // parse Server name
                GetKeyValue(&ptr, "db_server", szServer,
sizeof(szServer), ERR_NO_SERVER_SPECIFIED);
                // parse User name
                GetKeyValue(&ptr, "db_user", szUser,
sizeof(szUser), NO_ERR);
                // parse Password
                GetKeyValue(&ptr, "db_passwd", szPassword,
sizeof(szPassword), NO_ERR);
                // parse Database name
                GetKeyValue(&ptr, "db_name", szDatabase,
sizeof(szDatabase), NO_ERR);
        }

        // parse warehouse ID
        int w_id = GetIntKeyValue(&ptr, "w_id",
ERR_HTML_ILL_FORMED, ERR_W_ID_INVALID);
        if ( w_id < 1 )
                throw new CWEBCLNT_ERR(
ERR_W_ID_INVALID);

        // parse district ID
        int d_id = GetIntKeyValue(&ptr, "d_id",
ERR_HTML_ILL_FORMED, ERR_D_ID_INVALID);
        if ( d_id < 1 || d_id > 10 )
                throw new CWEBCLNT_ERR(
ERR_D_ID_INVALID);


        iNewTerm = TermAdd();

        Term.pClientData[iNewTerm].w_id = w_id;
        Term.pClientData[iNewTerm].d_id = d_id;

        try
        {
                if (Reg.eTxnMon == TUXEDO)
                        Term.pClientData[iNewTerm].pTxn
= pCTPCC_TUXEDO_new();
                else if (Reg.eTxnMon == ENCINA)
                        Term.pClientData[iNewTerm].pTxn
= pCTPCC_ENCINA_new();
                else if (Reg.eTxnMon == COM)
                        Term.pClientData[iNewTerm].pTxn
= pCTPCC_COM_new( Reg.bCOM_SinglePool );
                else if (Reg.eDB_Protocol == ODBC)
                        Term.pClientData[iNewTerm].pTxn
= pCTPCC_ODBC_new( szServer, szUser, szPassword,
szMyComputerName, szDatabase );
                else if (Reg.eDB_Protocol == DBLIB)
                        Term.pClientData[iNewTerm].pTxn
= pCTPCC_DBLIB_new( szServer, szUser, szPassword,
szMyComputerName, szDatabase );

        }
        catch (...)
        {
                TermDelete(iNewTerm);
                throw;                  // pass exception upward
        }

        MakeMainMenuForm(iNewTerm,
Term.pClientData[iNewTerm].iSyncId, szBuffer);
}

/* FUNCTION: StatsCmd
 *
 * PURPOSE:         This function returns to the browser the total
number of active terminal ids.
```

```
 *                              This routine is for
development/debugging purposes.
 *
 */

void StatsCmd(EXTENSION_CONTROL_BLOCK *pECB, char
*szBuffer)
{
        int i;
        int     iTotal;

        EnterCriticalSection(&TermCriticalSection);

        iTotal = 0;
        for(i=0; i<Term.iNumEntries; i++)
        {
                if (Term.pClientData[i].iNextFree == -1)
                        iTotal++;
        }

        LeaveCriticalSection(&TermCriticalSection);

        wsprintf( szBuffer,
                        "<HTML><HEAD><TITLE>TPC-C
Web Client Stats</TITLE></HEAD>"
                        "<BODY><B><BIG> Total Active
Connections: %d </BIG></B><BR></BODY></HTML>"
                        , iTotal );
}

char *CWEBCLNT_ERR::ErrorText()
{
        static SERRORMSG errorMsgs[] =
        {
                {       ERR_COMMAND_UNDEFINED,
                                "Command undefined."

                                },
                {       ERR_D_ID_INVALID,
                                "Invalid District ID Must
be 1 to 10."
                },
                {
ERR_DELIVERY_CARRIER_ID_RANGE,
"Delivery Carrier ID out of range must be 1 - 10."
                },
                {
ERR_DELIVERY_CARRIER_INVALID,
"Delivery Carrier ID invalid must be numeric 1 - 10."
        },
                {
ERR_DELIVERY_MISSING_OCD_KEY,
"Delivery missing Carrier ID key \"OCD*\"."
                                },
                {
ERR_DELIVERY_THREAD_FAILED,
"Could not start delivery worker thread."
                                },
                {       ERR_GETPROCADDR_FAILED,
                                "Could not map proc in
DLL.  GetProcAddr error.  DLL="
},
                {       ERR_HTML_ILL_FORMED,
                                "Required key field is missing from
HTML string."                                                   },
                {
ERR_INVALID_SYNC_CONNECTION,
"Invalid Terminal Sync ID."
                                                                },
                {       ERR_INVALID_TERMID,
                                "Invalid Terminal ID."

                                },
                {       ERR_LOADDLL_FAILED,
                                "Load of DLL failed.
DLL="
                                },
                {
ERR_MAX_CONNECTIONS_EXCEEDED,
"No connections available.  Max Connections is probably too low."   },
                {
ERR_MISSING_REGISTRY_ENTRIES,
"Required registry entries are missing.  Rerun INSTALL to correct."
},
                {
ERR_NEWORDER_CUSTOMER_INVALID,
"New Order customer id invalid data type, range = 1 to 3000."
},
                {
ERR_NEWORDER_CUSTOMER_KEY,
"New Order missing Customer key \"CID*\"."
                                },
                {
ERR_NEWORDER_DISTRICT_INVALID,
"New Order District ID Invalid range 1 - 10."
                                },
                {
ERR_NEWORDER_FORM_MISSING_DID,
"New Order missing District key \"DID*\"."
                                },
                {
ERR_NEWORDER_ITEMID_INVALID,
"New Order Item Id is wrong data type, must be numeric."
        },
                {
ERR_NEWORDER_ITEMID_RANGE,
"New Order Item Id is out of range. Range = 1 to 999999."
        },
                {
ERR_NEWORDER_ITEMID_WITHOUT_SUPPW,
"New Order Item_Id field entered without a corresponding Supp_W."
},
                {
ERR_NEWORDER_MISSING_IID_KEY,
"New Order missing Item Id key \"IID*\"."
                                },
                {
ERR_NEWORDER_MISSING_QTY_KEY,
"New Order Missing Qty key \"Qty##*\"."
                                },
                {
ERR_NEWORDER_MISSING_SUPPW_KEY,
"New Order missing Supp_W key \"SP##*\"."
                                },
                {
ERR_NEWORDER_NOITEMS_ENTERED,
"New Order No order lines entered."
                                                        },
                {
ERR_NEWORDER_QTY_INVALID,
"New Order Qty invalid must be numeric range 1 - 99."
        },
                {       ERR_NEWORDER_QTY_RANGE,
                                "New Order Qty is out of
```

```
range. Range = 1 to 99."
},
                {
ERR_NEWORDER_QTY_WITHOUT_SUPPW,
"New Order Qty field entered without a corresponding Supp_W."
},
                {
ERR_NEWORDER_SUPPW_INVALID,
"New Order Supp_W invalid data type must be numeric."
                },
                {       ERR_NO_SERVER_SPECIFIED,
                        "No Server name specified."

                },
                {
ERR_ORDERSTATUS_CID_AND_CLT,
"Order Status Only Customer ID or Last Name may be entered, not
both."    },
                {
ERR_ORDERSTATUS_CID_INVALID,
"Order Status Customer ID invalid, range must be numeric 1 - 3000."
},
                {
ERR_ORDERSTATUS_CLT_RANGE,
"Order Status Customer last name longer than 16 characters."
},
                {
ERR_ORDERSTATUS_DID_INVALID,
"Order Status District invalid, value must be numeric 1 - 10."
},
                {
ERR_ORDERSTATUS_MISSING_CID_CLT,
"Order Status Either Customer ID or Last Name must be entered."
},
                {
ERR_ORDERSTATUS_MISSING_CID_KEY,
"Order Status missing Customer key \"CID*\"."
                },
                {
ERR_ORDERSTATUS_MISSING_CLT_KEY,
"Order Status missing Customer Last Name key \"CLT*\"."
                },
                {
ERR_ORDERSTATUS_MISSING_DID_KEY,
"Order Status missing District key \"DID*\"."
                },
                {       ERR_PAYMENT_CDI_INVALID,
                        "Payment Customer district invalid
must be numeric."                                       },
                {       ERR_PAYMENT_CID_AND_CLT,
                        "Payment Only Customer ID or Last
Name may be entered, not both." },
                {
ERR_PAYMENT_CUSTOMER_INVALID,
"Payment Customer data type invalid, must be numeric."
                },
                {       ERR_PAYMENT_CWI_INVALID,
                        "Payment Customer Warehouse
invalid, must be numeric."                                      },
                {
ERR_PAYMENT_DISTRICT_INVALID,
"Payment District ID is invalid, must be 1 - 10."
                },
                {       ERR_PAYMENT_HAM_INVALID,
                        "Payment Amount invalid data type
must be numeric."                                       },
                {       ERR_PAYMENT_HAM_RANGE,
                                "Payment Amount out of
range, 0 - 9999.99."
                },
                {
ERR_PAYMENT_LAST_NAME_TO_LONG,
"Payment Customer last name longer than 16 characters."
                },
                {
ERR_PAYMENT_MISSING_CDI_KEY,
"Payment missing Customer district key \"CDI*\"."
                },
                {
ERR_PAYMENT_MISSING_CID_CLT,
"Payment Either Customer ID or Last Name must be entered."
                },
                {
ERR_PAYMENT_MISSING_CID_KEY,
"Payment missing Customer Key \"CID*\"."
                                },
                {
ERR_PAYMENT_MISSING_CLT_KEY,
"Payment missing Customer Last Name key \"CLT*\"."
                },
                {
ERR_PAYMENT_MISSING_CWI_KEY,
"Payment missing Customer Warehouse key \"CWI*\"."
                                },
                {
ERR_PAYMENT_MISSING_DID_KEY,
"Payment missing District Key \"DID*\"."
                                },
                {
ERR_PAYMENT_MISSING_HAM_KEY,
"Payment missing Amount key \"HAM*\"."
                                                },
                {
ERR_STOCKLEVEL_MISSING_THRESHOLD_KEY,
"Stock Level; missing Threshold key \"TT*\"."
                                },
                {
ERR_STOCKLEVEL_THRESHOLD_INVALID,
"Stock Level; Threshold value must be in the range = 1 - 99."
},
                {
ERR_STOCKLEVEL_THRESHOLD_RANGE,
"Stock Level Threshold out of range, range must be 1 - 99."
                },
                {       ERR_VERSION_MISMATCH,
                        "Invalid version field.  RTE and Web
Client are probably out of sync." },
                {       ERR_W_ID_INVALID,
                                "Invalid Warehouse ID."

                                                },
                {       0,                                                      ""


                }
        };

        char szTmp[256];
        int i = 0;
        while (TRUE)
        {
                if (errorMsgs[i].szMsg[0] == 0)
                {
                        strcpy( szTmp, "Unknown error
number." );
```

```
                        break;
                }
                if (m_Error == errorMsgs[i].iError)
                {
                        strcpy( szTmp, errorMsgs[i].szMsg );
                        break;
                }
                i++;
        }

        if (m_szTextDetail)
                strcat( szTmp, m_szTextDetail );
        if (m_SystemErr)
                wsprintf( szTmp+strlen(szTmp), "  Error=%d",
m_SystemErr );

        m_szErrorText = new char[strlen(szTmp)+1];
        strcpy( m_szErrorText, szTmp );
        return m_szErrorText;

}

/* FUNCTION: GetKeyValue
 *
 * PURPOSE:         This function parses a http formatted string for
specific key values.
 *
 * ARGUMENTS:     char                    *pQueryString
http string from client browser
 *                      char
*pKey                   key value to look for
 *                      char
*pValue                 character array into which to place
key's value
 *                      int
        iMax            maximum length of key
value array.
 *                      WEBERROR
err                     error value to throw
 *
 * RETURNS:             nothing.
 *
 * ERROR:               if (the pKey value is not found) then
 *                              if (err == 0)
 *
return (empty string)
 *                              else
 *
throw CWEBCLNT_ERR(err)
 *
 * COMMENTS:    http keys are formatted either KEY=value& or
KEY=value\0. This DLL formats
 *                      TPC-C input fields in
such a manner that the keys can be extracted in the
 *                      above manner.
 */

void GetKeyValue(char **pQueryString, char *pKey, char *pValue,
int iMax, WEBERROR err)
{
        char *ptr;

        if ( !(ptr=strstr(*pQueryString, pKey)) )
                goto ErrorExit;
        ptr += strlen(pKey);
        if ( *ptr != '=' )
                goto ErrorExit;
        ptr++;
        iMax--;  // one position is for terminating null
        while( *ptr && *ptr != '&' && iMax)
        {
                *pValue++ = *ptr++;
                iMax--;
        }
        *pValue = 0;  // terminating null

        *pQueryString = ptr;
        return;

ErrorExit:
        if (err != NO_ERR)
                throw new CWEBCLNT_ERR( err );
        *pValue = 0;  // return empty result string
}

/* FUNCTION: GetIntKeyValue
 *
 * PURPOSE:         This function parses a http formatted string for a
specific key value.
 *
 * ARGUMENTS:     char                    *pQueryString
http string from client browser
 *                      char
*pKey                   key value to look for
 *                      WEBERROR
NoKeyErr        error value to throw if key not found
 *                      WEBERROR
NotIntErr       error value to throw if value not numeric
 *
 * RETURNS:             integer
 *
 * ERROR:               if (the pKey value is not found) then
 *                              if (NoKeyErr
!= NO_ERR)
 *
throw CWEBCLNT_ERR(err)
 *                              else
 *
return 0
 *                      else if (non-numeric char
found) then
 *                              if (NotIntErr !=
NO_ERR) then
 *
throw CWEBCLNT_ERR(err)
 *                              else
 *
return 0
 *
 * COMMENTS:    http keys are formatted either KEY=value& or
KEY=value\0. This DLL formats
 *                      TPC-C input fields in
such a manner that the keys can be extracted in the
 *                      above manner.
 */

int GetIntKeyValue(char **pQueryString, char *pKey, WEBERROR
NoKeyErr, WEBERROR NotIntErr)
{
        char *ptr0;
        char *ptr;

        if ( !(ptr=strstr(*pQueryString, pKey)) )
                goto ErrorNoKey;
        ptr += strlen(pKey);
```

```
	if ( *ptr != '=' )
		goto ErrorNoKey;
	ptr++;

	ptr0 = ptr;		// remember starting point
	// scan string until a terminator (null or &) or a non-digit
	while( *ptr && *ptr != '&' && isdigit(*ptr) )
		ptr++;

	// make sure we stopped scanning for the right reason
	if ((ptr0 == ptr) || (*ptr && *ptr != '&'))
	{
		if (NotIntErr != NO_ERR)
			throw new CWEBCLNT_ERR(
NoKeyErr );
		return 0;
	}

	*pQueryString = ptr;
	return atoi(ptr0);

ErrorNoKey:
	if (NoKeyErr != NO_ERR)
		throw new CWEBCLNT_ERR( NoKeyErr );
	return 0;
}

/* FUNCTION: TermInit
 *
 * PURPOSE:		This function initializes the client terminal
structure; it is called when the TPCC.DLL
 *			is first loaded by the inet service.
 *
 */

void TermInit(void)
{
	EnterCriticalSection(&TermCriticalSection);

	Term.iMasterSyncId  = 1;
	Term.iNumEntries    = Reg.dwMaxConnections+1;

	Term.pClientData    = NULL;
	Term.pClientData    =
(PCLIENTDATA)malloc(Term.iNumEntries*
sizeof(CLIENTDATA));
	if (Term.pClientData == NULL)
	{
		LeaveCriticalSection(&TermCriticalSection);
		throw new CWEBCLNT_ERR(
ERR_MEM_ALLOC_FAILED);
	}

	ZeroMemory( Term.pClientData, Term.iNumEntries *
sizeof(CLIENTDATA));

	Term.iFreeList			= Term.iNumEntries-1;
	// build free list
	// note: Term.pClientData[0].iNextFree gets set to -1, which
marks it as "in use".
	//	This is intentional, as the zero entry is used as an
anchor and never
	//			allocated as an actual terminal.
	for(int i=0; i<Term.iNumEntries; i++)
		Term.pClientData[i].iNextFree = i-1;

	LeaveCriticalSection(&TermCriticalSection);
}

/* FUNCTION: TermDeleteAll
 *
 * PURPOSE:		This function frees allocated resources
associated with the terminal structure.
 *
 * ARGUMENTS:	none
 *
 * RETURNS:			None
 *
 * COMMENTS:	This function is called only when the inet service
unloads the TPCC.DLL
 *
 */

void TermDeleteAll(void)
{
	EnterCriticalSection(&TermCriticalSection);

	for(int i=1; i<Term.iNumEntries; i++)
	{
		if (Term.pClientData[i].iNextFree == -1)
			delete Term.pClientData[i].pTxn;
	}

	Term.iFreeList			= 0;
	Term.iNumEntries	= 0;
	if ( Term.pClientData )
		free(Term.pClientData);
	Term.pClientData	= NULL;

	LeaveCriticalSection(&TermCriticalSection);
}

/* FUNCTION: TermAdd
 *
 * PURPOSE:		This function assigns a terminal id which is used
to identify a client browser.
 *
 * RETURNS:			int			assigned
terminal id
 *
 */

int TermAdd(void)
{
	DWORD	i;
	int			iNewTerm, iTickCount;

	if (Term.iNumEntries == 0)
		return -1;

	EnterCriticalSection(&TermCriticalSection);
	if (Term.iFreeList != 0)
	{	// position is available
		iNewTerm = Term.iFreeList;
		Term.iFreeList =
Term.pClientData[iNewTerm].iNextFree;
		Term.pClientData[iNewTerm].iNextFree = -1;  //
indicates this position is in use
	}
	else
	{	// no open slots, so find the slot that hasn't been
used in the longest time and reuse it
		for(iNewTerm=1, i=1,
iTickCount=0x7FFFFFFF; i<Reg.dwMaxConnections; i++)
		{
```

```
                                        if (iTickCount >
Term.pClientData[i].iTickCount)
                                        {
                                                iTickCount =
Term.pClientData[i].iTickCount;
                                                iNewTerm = i;
                                        }
                        }
                        // if oldest term is less than one minute old, it
probably means that more connections
                        // are being attempted than were specified as
"Max Connections" at install.  In this case,
                        // do not bump existing connection; instead,
return error to requestor.
                        if ((GetTickCount() - iTickCount) < 60000)
                        {

LeaveCriticalSection(&TermCriticalSection);
                                throw new CWEBCLNT_ERR(
ERR_MAX_CONNECTIONS_EXCEEDED );
                        }
        }

        Term.pClientData[iNewTerm].iTickCount =
GetTickCount();
        Term.pClientData[iNewTerm].iSyncId =
Term.iMasterSyncId++;
        Term.pClientData[iNewTerm].pTxn = NULL;

        LeaveCriticalSection(&TermCriticalSection);
        return iNewTerm;
}

/* FUNCTION: TermDelete
 *
 * PURPOSE:         This function makes a terminal entry in the Term
array available for reuse.
 *
 * ARGUMENTS:     int
        id                      Terminal id of client exiting
 *
 */

void TermDelete(int id)
{
        if ( id > 0 && id < Term.iNumEntries )
        {
                delete Term.pClientData[id].pTxn;

                // put onto free list
                EnterCriticalSection(&TermCriticalSection);

                Term.pClientData[id].iNextFree =
Term.iFreeList;
                Term.iFreeList = id;

                LeaveCriticalSection(&TermCriticalSection);
        }
}


/* FUNCTION: MakeErrorForm
 */

void ErrorForm(EXTENSION_CONTROL_BLOCK*pECB, int
iType, int iErrorNum, int iTermId, int iSyncId, char *szErrorText, char
*szBuffer )
{
        wsprintf(szBuffer,
                "<HTML><HEAD><TITLE>TPC-C
Error</TITLE></HEAD><BODY>"
                "<FORM ACTION=\"tpcc.dll\"
METHOD=\"GET\">"
                "<INPUT TYPE=\"hidden\"
NAME=\"STATUSID\" VALUE=\"%d\">"
                "<INPUT TYPE=\"hidden\" NAME=\"ERROR\"
VALUE=\"%d\">"
                "<INPUT TYPE=\"hidden\"
NAME=\"FORMID\" VALUE=\"%d\">"
                "<INPUT TYPE=\"hidden\"
NAME=\"TERMID\" VALUE=\"%d\">"
                "<INPUT TYPE=\"hidden\"
NAME=\"SYNCID\" VALUE=\"%d\">"
                "<BOLD>An Error
Occurred</BOLD><BR><BR>"
                "%s"
                "<BR><BR><HR>"
                "<INPUT TYPE=\"submit\" NAME=\"CMD\"
VALUE=\"..NewOrder..\">"
                "<INPUT TYPE=\"submit\" NAME=\"CMD\"
VALUE=\"..Payment..\">"
                "<INPUT TYPE=\"submit\" NAME=\"CMD\"
VALUE=\"..Delivery..\">"
                "<INPUT TYPE=\"submit\" NAME=\"CMD\"
VALUE=\"..Order-Status..\">"
                "<INPUT TYPE=\"submit\" NAME=\"CMD\"
VALUE=\"..Stock-Level..\">"
                "<INPUT TYPE=\"submit\" NAME=\"CMD\"
VALUE=\"..Exit..\">"
                "</FORM></BODY></HTML>"
                , iType, iErrorNum, MAIN_MENU_FORM,
iTermId, iSyncId, szErrorText );
}

/* FUNCTION: MakeMainMenuForm
 */

void MakeMainMenuForm(int iTermId, int iSyncId, char *szForm)
{
        wsprintf(szForm,
                "<HTML><HEAD><TITLE>TPC-C Main
Menu</TITLE></HEAD><BODY>"
                "Select Desired Transaction.<BR><HR>"
                "<FORM ACTION=\"tpcc.dll\"
METHOD=\"GET\">"
                "<INPUT TYPE=\"hidden\"
NAME=\"STATUSID\" VALUE=\"0\">"
                "<INPUT TYPE=\"hidden\" NAME=\"ERROR\"
VALUE=\"0\">"
                "<INPUT TYPE=\"hidden\"
NAME=\"FORMID\" VALUE=\"%d\">"
                "<INPUT TYPE=\"hidden\"
NAME=\"TERMID\" VALUE=\"%d\">"
                "<INPUT TYPE=\"hidden\"
NAME=\"SYNCID\" VALUE=\"%d\">"
                "<INPUT TYPE=\"submit\" NAME=\"CMD\"
VALUE=\"..NewOrder..\">"
                "<INPUT TYPE=\"submit\" NAME=\"CMD\"
VALUE=\"..Payment..\">"
                "<INPUT TYPE=\"submit\" NAME=\"CMD\"
VALUE=\"..Delivery..\">"
                "<INPUT TYPE=\"submit\" NAME=\"CMD\"
VALUE=\"..Order-Status..\">"
                "<INPUT TYPE=\"submit\" NAME=\"CMD\"
VALUE=\"..Stock-Level..\">"
```

```
                        "<INPUT TYPE=\"submit\" NAME=\"CMD\"
VALUE=\"..Exit..\">"
                        "</FORM></BODY></HTML>"
                        , MAIN_MENU_FORM, iTermId, iSyncId);
}

/* FUNCTION: MakeStockLevelForm
 *
 * PURPOSE:          This function constructs the Stock Level HTML
page.
 *
 * COMMENTS:         The internal client buffer is created when the
terminal id is assigned and should not
 *                                          be freed except when the
client terminal id is no longer needed.
 */

void MakeStockLevelForm(int iTermId, STOCK_LEVEL_DATA
*pStockLevelData, BOOL bInput, char *szForm)
{
        int             c;

        c = wsprintf(szForm,
                        "<HTML><HEAD><TITLE>TPC-C Stock
Level</TITLE></HEAD><FORM ACTION=\"tpcc.dll\"
METHOD=\"GET\">"
                        "<INPUT TYPE=\"hidden\"
NAME=\"STATUSID\" VALUE=\"0\">"
                        "<INPUT TYPE=\"hidden\" NAME=\"ERROR\"
VALUE=\"0\">"
                        "<INPUT TYPE=\"hidden\"
NAME=\"FORMID\" VALUE=\"%d\">"
                        "<INPUT TYPE=\"hidden\"
NAME=\"TERMID\" VALUE=\"%d\">"
                        "<INPUT TYPE=\"hidden\"
NAME=\"SYNCID\" VALUE=\"%d\">"
                        "<PRE><font face=\"Courier\">
    Stock-Level<BR>"
                        "Warehouse: %6.6d   District: %2.2d<BR>
<BR>",
                        STOCK_LEVEL_FORM, iTermId,
Term.pClientData[iTermId].iSyncId,
                        Term.pClientData[iTermId].w_id,
Term.pClientData[iTermId].d_id);

        if ( bInput )
        {
                strcpy(szForm+c,
                        "Stock Level Threshold: <INPUT
NAME=\"TT*\" SIZE=2><BR> <BR>"
                        "low stock:    </font><BR> <BR>
<BR> <BR> <BR> <BR> <BR> <BR> <BR> <BR>"
                        " <BR> <BR> <BR> <BR> <BR>
<BR> <BR></PRE><HR>"
                        "<INPUT TYPE=\"submit\"
NAME=\"CMD\" VALUE=\"Process\">"
                        "<INPUT TYPE=\"submit\"
NAME=\"CMD\" VALUE=\"Menu\">"
                        "</FORM></HTML>" );
        }
        else
        {
                wsprintf(szForm+c,
                        "Stock Level Threshold: %2.2d<BR>
<BR>"
                        "low stock: %3.3d</font> <BR>
<BR> <BR> <BR> <BR> <BR> <BR> <BR> <BR>"
                        " <BR> <BR> <BR> <BR> <BR>
<BR> <BR> <BR></PRE><HR>"
                        "<INPUT TYPE=\"submit\"
NAME=\"CMD\" VALUE=\"..NewOrder..\">"
                        "<INPUT TYPE=\"submit\"
NAME=\"CMD\" VALUE=\"..Payment..\">"
                        "<INPUT TYPE=\"submit\"
NAME=\"CMD\" VALUE=\"..Delivery..\">"
                        "<INPUT TYPE=\"submit\"
NAME=\"CMD\" VALUE=\"..Order-Status..\">"
                        "<INPUT TYPE=\"submit\"
NAME=\"CMD\" VALUE=\"..Stock-Level..\">"
                        "<INPUT TYPE=\"submit\"
NAME=\"CMD\" VALUE=\"..Exit..\">"
                        "</FORM></HTML>"
                        , pStockLevelData->threshold,
pStockLevelData->low_stock);
        }
}

/* FUNCTION: MakeNewOrderForm
 *
 * COMMENTS:         The internal client buffer is created when the
terminal id is assigned and should not
 *                                          be freed except when the
client terminal id is no longer needed.
 */

void MakeNewOrderForm(int iTermId, NEW_ORDER_DATA
*pNewOrderData, BOOL bInput, char *szForm)
{
        int                     i, c;
        BOOL    bValid;
        static  char szBR[] = " <BR> <BR> <BR> <BR>
<BR> <BR> <BR> <BR> <BR> <BR> <BR> <BR> <BR>
<BR>";

        if (!bInput)
                assert( pNewOrderData->exec_status_code ==
eOK || pNewOrderData->exec_status_code == eInvalidItem );

        bValid = (bInput || (pNewOrderData->exec_status_code ==
eOK));

        c = wsprintf(szForm,
                "<HTML><HEAD><TITLE>TPC-C New
Order</TITLE></HEAD><BODY>"
                "<FORM ACTION=\"tpcc.dll\"
METHOD=\"GET\">"
                "<INPUT TYPE=\"hidden\"
NAME=\"STATUSID\" VALUE=\"%d\">"
                "<INPUT TYPE=\"hidden\" NAME=\"ERROR\"
VALUE=\"0\">"
                "<INPUT TYPE=\"hidden\"
NAME=\"FORMID\" VALUE=\"%d\">"
                "<INPUT TYPE=\"hidden\"
NAME=\"TERMID\" VALUE=\"%d\">"
                "<INPUT TYPE=\"hidden\"
NAME=\"SYNCID\" VALUE=\"%d\">"
                "<PRE><font face=\"Courier\">
    New Order<BR>"
                , bValid ? 0 : ERR_BAD_ITEM_ID,
NEW_ORDER_FORM, iTermId,
Term.pClientData[iTermId].iSyncId);

        if ( bInput )
        {
```

```
                    c += wsprintf(szForm+c, "Warehouse: %6.6d   ",
Term.pClientData[iTermId].w_id );

                    strcpy( szForm+c,
                        "District: <INPUT NAME=\"DID*\"
SIZE=1>                 Date:<BR>"
                        "Customer:  <INPUT
NAME=\"CID*\" SIZE=4>   Name:               Credit:
%Disc:<BR>"
                        "Order Number:          Number of
Lines:          W_tax:        D_tax:<BR> <BR>"
                        " Supp_W  Item_Id  Item Name
    Qty  Stock  B/G  Price    Amount<BR>"
                        "  <INPUT NAME=\"SP00*\"
SIZE=4>  <INPUT NAME=\"IID00*\" SIZE=6>
<INPUT NAME=\"Qty00*\" SIZE=1><BR>"
                        "  <INPUT NAME=\"SP01*\"
SIZE=4>  <INPUT NAME=\"IID01*\" SIZE=6>
<INPUT NAME=\"Qty01*\" SIZE=1><BR>"
                        "  <INPUT NAME=\"SP02*\"
SIZE=4>  <INPUT NAME=\"IID02*\" SIZE=6>
<INPUT NAME=\"Qty02*\" SIZE=1><BR>"
                        "  <INPUT NAME=\"SP03*\"
SIZE=4>  <INPUT NAME=\"IID03*\" SIZE=6>
<INPUT NAME=\"Qty03*\" SIZE=1><BR>"
                        "  <INPUT NAME=\"SP04*\"
SIZE=4>  <INPUT NAME=\"IID04*\" SIZE=6>
<INPUT NAME=\"Qty04*\" SIZE=1><BR>"
                        "  <INPUT NAME=\"SP05*\"
SIZE=4>  <INPUT NAME=\"IID05*\" SIZE=6>
<INPUT NAME=\"Qty05*\" SIZE=1><BR>"
                        "  <INPUT NAME=\"SP06*\"
SIZE=4>  <INPUT NAME=\"IID06*\" SIZE=6>
<INPUT NAME=\"Qty06*\" SIZE=1><BR>"
                        "  <INPUT NAME=\"SP07*\"
SIZE=4>  <INPUT NAME=\"IID07*\" SIZE=6>
<INPUT NAME=\"Qty07*\" SIZE=1><BR>"
                        "  <INPUT NAME=\"SP08*\"
SIZE=4>  <INPUT NAME=\"IID08*\" SIZE=6>
<INPUT NAME=\"Qty08*\" SIZE=1><BR>"
                        "  <INPUT NAME=\"SP09*\"
SIZE=4>  <INPUT NAME=\"IID09*\" SIZE=6>
<INPUT NAME=\"Qty09*\" SIZE=1><BR>"
                        "  <INPUT NAME=\"SP10*\"
SIZE=4>  <INPUT NAME=\"IID10*\" SIZE=6>
<INPUT NAME=\"Qty10*\" SIZE=1><BR>"
                        "  <INPUT NAME=\"SP11*\"
SIZE=4>  <INPUT NAME=\"IID11*\" SIZE=6>
<INPUT NAME=\"Qty11*\" SIZE=1><BR>"
                        "  <INPUT NAME=\"SP12*\"
SIZE=4>  <INPUT NAME=\"IID12*\" SIZE=6>
<INPUT NAME=\"Qty12*\" SIZE=1><BR>"
                        "  <INPUT NAME=\"SP13*\"
SIZE=4>  <INPUT NAME=\"IID13*\" SIZE=6>
<INPUT NAME=\"Qty13*\" SIZE=1><BR>"
                        "  <INPUT NAME=\"SP14*\"
SIZE=4>  <INPUT NAME=\"IID14*\" SIZE=6>
<INPUT NAME=\"Qty14*\" SIZE=1><BR>"
                        "Execution Status:
        Total:<BR>"
                        "</font></PRE><HR>"
                        "<INPUT TYPE=\"submit\"
NAME=\"CMD\" VALUE=\"Process\">"
                        "<INPUT TYPE=\"submit\"
NAME=\"CMD\" VALUE=\"Menu\">"
                        "</FORM></HTML>"
                        );
            }
            else
            {
                    c += wsprintf(szForm+c, "Warehouse: %6.6d
District: %2.2d                 Date: ",
                        pNewOrderData->w_id,
                        pNewOrderData->d_id);

                    if ( bValid )
                    {
                        c += wsprintf(szForm+c,
"%2.2d-%2.2d-%4.4d %2.2d:%2.2d:%2.2d",

pNewOrderData->o_entry_d.day,

pNewOrderData->o_entry_d.month,

pNewOrderData->o_entry_d.year,

pNewOrderData->o_entry_d.hour,

pNewOrderData->o_entry_d.minute,

pNewOrderData->o_entry_d.second);
                    }

                    c += wsprintf(szForm+c, "<BR>Customer:
%4.4d   Name: %-16s   Credit: %-2s   ",
                        pNewOrderData->c_id,
pNewOrderData->c_last, pNewOrderData->c_credit);

                    if ( bValid )
                    {
                        c += sprintf(szForm+c,

"%%Disc: %5.2f          <BR>"

"Order Number: %8.8d  Number of Lines: %2.2d       W_tax: %5.2f
D_tax: %5.2f  <BR> <BR>"
                                                                "
Supp_W  Item_Id  Item Name              Qty  Stock  B/G  Price
Amount<BR>",

100.0*pNewOrderData->c_discount,
                                    pNewOrderData->o_id,

pNewOrderData->o_ol_cnt,
                                    100.0 *
pNewOrderData->w_tax,
                                    100.0 *
pNewOrderData->d_tax);

                                for(i=0;
i<pNewOrderData->o_ol_cnt; i++)
                                {
                                    c += sprintf(szForm+c, "
%6.6d  %6.6d  %-24s  %2.2d   %3.3d   %1.1s   $%6.2f  $%7.2f
<BR>",

pNewOrderData->OL[i].ol_supply_w_id,

pNewOrderData->OL[i].ol_i_id,

pNewOrderData->OL[i].ol_i_name,

pNewOrderData->OL[i].ol_quantity,

pNewOrderData->OL[i].ol_stock,
```

```
pNewOrderData->OL[i].ol_brand_generic,

pNewOrderData->OL[i].ol_i_price,

pNewOrderData->OL[i].ol_amount );
                                        }
                                }
                                else
                                {
                                        c += wsprintf(szForm+c,
                                                "%Disc:<BR>"
                                                "Order Number: %8.8d
Number of Lines:        W_tax:      D_tax:<BR> <BR>"
                                                " Supp_W  Item_Id  Item
Name            Qty  Stock  B/G  Price    Amount<BR>"
                                                , pNewOrderData->o_id);

                                        i = 0;
                                }

                                strncpy( szForm+c, szBR, (15-i)*5 );
                                c += (15-i)*5;

                                if ( bValid )
                                        c += sprintf(szForm+c, "Execution
Status: Transaction commited.               Total:  $%8.2f  ",

pNewOrderData->total_amount);
                                else
                                        c += wsprintf(szForm+c, "Execution
Status: Item number is not valid.           Total:");

                                strcpy(szForm+c,
                                        " <BR></font></PRE><HR>"
                                        "<INPUT TYPE=\"submit\"
NAME=\"CMD\" VALUE=\"..NewOrder..\">"
                                        "<INPUT TYPE=\"submit\"
NAME=\"CMD\" VALUE=\"..Payment..\">"
                                        "<INPUT TYPE=\"submit\"
NAME=\"CMD\" VALUE=\"..Delivery..\">"
                                        "<INPUT TYPE=\"submit\"
NAME=\"CMD\" VALUE=\"..Order-Status..\">"
                                        "<INPUT TYPE=\"submit\"
NAME=\"CMD\" VALUE=\"..Stock-Level..\">"
                                        "<INPUT TYPE=\"submit\"
NAME=\"CMD\" VALUE=\"..Exit..\">"
                                        "</FORM></HTML>"
                                        );
                }
}

/* FUNCTION: MakePaymentForm
 *
 * COMMENTS:       The internal client buffer is created when the
terminal id is assigned and should not
 *                                              be freed except when the
client terminal id is no longer needed.
 */

void MakePaymentForm(int iTermId, PAYMENT_DATA
*pPaymentData, BOOL bInput, char *szForm)
{
        int c;

        c = wsprintf(szForm,
                "<HTML><HEAD><TITLE>TPC-C
Payment</TITLE></HEAD><BODY>"
                "<FORM ACTION=\"tpcc.dll\"
METHOD=\"GET\">"
                "<INPUT TYPE=\"hidden\"
NAME=\"STATUSID\" VALUE=\"0\">"
                "<INPUT TYPE=\"hidden\" NAME=\"ERROR\"
VALUE=\"0\">"
                "<INPUT TYPE=\"hidden\"
NAME=\"FORMID\" VALUE=\"%d\">"
                "<INPUT TYPE=\"hidden\"
NAME=\"TERMID\" VALUE=\"%d\">"
                "<INPUT TYPE=\"hidden\"
NAME=\"SYNCID\" VALUE=\"%d\">"
                "<PRE><font face=\"Courier\">
        Payment<BR>"
                "Date: "
                , PAYMENT_FORM, iTermId,
Term.pClientData[iTermId].iSyncId);

        if ( !bInput )
        {
                c += wsprintf(szForm+c, "%2.2d-%2.2d-%4.4d
%2.2d:%2.2d:%2.2d",
                        pPaymentData->h_date.day,
                        pPaymentData->h_date.month,
                        pPaymentData->h_date.year,
                        pPaymentData->h_date.hour,
                        pPaymentData->h_date.minute,
                        pPaymentData->h_date.second);
        }

        if ( bInput )
        {
                c += wsprintf(szForm+c,
                        "<BR> <BR>Warehouse: %6.6d"
                        "                District: <INPUT
NAME=\"DID*\" SIZE=1><BR> <BR> <BR> <BR> <BR>"
                        "Customer: <INPUT
NAME=\"CID*\" SIZE=4>"
                        "Cust-Warehouse: <INPUT
NAME=\"CWI*\" SIZE=6>  "
                        "Cust-District: <INPUT
NAME=\"CDI*\" SIZE=1><BR>"
                        "Name:                  <INPUT
NAME=\"CLT*\" SIZE=16>          Since:<BR>"
                        "
Credit:<BR>"
                        "
Disc:<BR>"
                        "
Phone:<BR> <BR>"
                        "Amount Paid:       $<INPUT
NAME=\"HAM*\" SIZE=7>     New Cust-Balance:<BR>"
                        "Credit Limit:<BR> <BR>Cust-Data:
<BR> <BR> <BR> <BR> <BR></font></PRE><HR>"
                        "<INPUT TYPE=\"submit\"
NAME=\"CMD\" VALUE=\"Process\"><INPUT TYPE=\"submit\"
NAME=\"CMD\" VALUE=\"Menu\">"
                        "</BODY></FORM></HTML>"
                        , Term.pClientData[iTermId].w_id);
        }
        else
        {
                c += wsprintf(szForm+c,
                        "<BR> <BR>Warehouse: %6.6d
        District: %2.2d<BR>"
                        "%-20s                  %-20s<BR>"
                        "%-20s                  %-20s<BR>"
```

```
                                "%-20s %-2s %5.5s-%4.4s      %-20s
%-2s %5.5s-%4.4s<BR> <BR>"
                                "Customer: %4.4d  Cust-Warehouse:
%6.6d  Cust-District: %2.2d<BR>"
                                "Name:   %-16s %-2s %-16s
Since:  %2.2d-%2.2d-%4.4d<BR>"
                                "      %-20s                Credit:
%-2s<BR>"

                                , Term.pClientData[iTermId].w_id,
pPaymentData->d_id
                                , pPaymentData->w_street_1,
pPaymentData->d_street_1
                                , pPaymentData->w_street_2,
pPaymentData->d_street_2
                                , pPaymentData->w_city,
pPaymentData->w_state, pPaymentData->w_zip,
pPaymentData->w_zip+5
                                , pPaymentData->d_city,
pPaymentData->d_state, pPaymentData->d_zip,
pPaymentData->d_zip+5
                                , pPaymentData->c_id,
pPaymentData->c_w_id,           pPaymentData->c_d_id
                                , pPaymentData->c_first,
pPaymentData->c_middle, pPaymentData->c_last
                                , pPaymentData->c_since.day,
pPaymentData->c_since.month,  pPaymentData->c_since.year
                                , pPaymentData->c_street_1,
pPaymentData->c_credit
                                );

        c += sprintf(szForm+c,
                                "      %-20s                %%Disc:
%5.2f<BR>",
                                pPaymentData->c_street_2,
100.0*pPaymentData->c_discount);

                        c += wsprintf(szForm+c,
                                "      %-20s %-2s %5.5s-%4.4s
Phone:  %6.6s-%3.3s-%3.3s-%4.4s<BR> <BR>",
                                pPaymentData->c_city,
pPaymentData->c_state, pPaymentData->c_zip,
pPaymentData->c_zip+5,
                                pPaymentData->c_phone,
pPaymentData->c_phone+6, pPaymentData->c_phone+9,
pPaymentData->c_phone+12 );

                        c += sprintf(szForm+c,
                                "Amount Paid:        $%7.2f      New
Cust-Balance: $%14.2f<BR>"
                                "Credit Limit:   $%13.2f<BR>
<BR>"
                                , pPaymentData->h_amount,
pPaymentData->c_balance
                                , pPaymentData->c_credit_lim
                                );

                        if ( pPaymentData->c_credit[0] == 'B' &&
pPaymentData->c_credit[1] == 'C' )
                                c += wsprintf(szForm+c,
                                                        "Cust-Data:
%-50.50s<BR>          %-50.50s<BR>          %-50.50s<BR>
%-50.50s<BR>",

pPaymentData->c_data, pPaymentData->c_data+50,
pPaymentData->c_data+100, pPaymentData->c_data+150 );
                        else
                                strcpy(szForm+c, "Cust-Data: <BR>
<BR> <BR> <BR>");

                                strcat(szForm,          "
<BR></font></PRE><HR>"

"<INPUT TYPE=\"submit\" NAME=\"CMD\"
VALUE=\"..NewOrder..\">"

"<INPUT TYPE=\"submit\" NAME=\"CMD\"
VALUE=\"..Payment..\">"

"<INPUT TYPE=\"submit\" NAME=\"CMD\"
VALUE=\"..Delivery..\">"

"<INPUT TYPE=\"submit\" NAME=\"CMD\"
VALUE=\"..Order-Status..\">"

"<INPUT TYPE=\"submit\" NAME=\"CMD\"
VALUE=\"..Stock-Level..\">"

"<INPUT TYPE=\"submit\" NAME=\"CMD\" VALUE=\"..Exit..\">"

"</BODY></FORM></HTML>");
                }

}

/* FUNCTION: MakeOrderStatusForm
 *
 * COMMENTS:       The internal client buffer is created when the
terminal id is assigned and should not
 *                                      be freed except when the
client terminal id is no longer needed.
 */

void MakeOrderStatusForm(int iTermId, ORDER_STATUS_DATA
*pOrderStatusData, BOOL bInput, char *szForm)
{
        int                     i, c;
        static char szBR[] = " <BR> <BR> <BR> <BR> <BR>
<BR> <BR> <BR> <BR> <BR> <BR> <BR> <BR> <BR> <BR>";

        c = wsprintf(szForm,
                "<HTML><HEAD><TITLE>TPC-C
Order-Status</TITLE></HEAD><BODY>"
                "<FORM ACTION=\"tpcc.dll\"
METHOD=\"GET\">"
                "<INPUT TYPE=\"hidden\"
NAME=\"STATUSID\" VALUE=\"0\">"
                "<INPUT TYPE=\"hidden\" NAME=\"ERROR\"
VALUE=\"0\">"
                "<INPUT TYPE=\"hidden\"
NAME=\"FORMID\" VALUE=\"%d\">"
                "<INPUT TYPE=\"hidden\"
NAME=\"TERMID\" VALUE=\"%d\">"
                "<INPUT TYPE=\"hidden\"
NAME=\"SYNCID\" VALUE=\"%d\">"
                "<PRE><font face=\"Courier\">
    Order-Status<BR>"
                "Warehouse: %6.6d   ",
                ORDER_STATUS_FORM, iTermId,
Term.pClientData[iTermId].iSyncId,
Term.pClientData[iTermId].w_id);

        if ( bInput )
        {
                strcpy(szForm+c,
```

```
                                "District: <INPUT NAME=\"DID*\"
SIZE=1><BR>"
                                "Customer: <INPUT
NAME=\"CID*\" SIZE=4>   Name:                   <INPUT
NAME=\"CLT*\" SIZE=23><BR>"
                                "Cust-Balance:<BR> <BR>"
                                "Order-Number:          Entry-Date:
          Carrier-Number:<BR>"
                                "Supply-W     Item-Id    Qty
Amount      Delivery-Date<BR> <BR> <BR> <BR> <BR>"
                                " <BR> <BR> <BR> <BR> <BR>
<BR> <BR> <BR> <BR> <BR> <BR></font></PRE>"
                                "<HR><INPUT TYPE=\"submit\"
NAME=\"CMD\" VALUE=\"Process\"><INPUTTYPE=\"submit\"
NAME=\"CMD\" VALUE=\"Menu\">"
                                "</BODY></FORM></HTML>" );
          }
          else
          {
                    c += wsprintf(szForm+c,
                                "District: %2.2d<BR>"
                                "Customer: %4.4d   Name: %-16s
%-2s %-16s<BR>",
                                pOrderStatusData->d_id,
pOrderStatusData->c_id,
                                pOrderStatusData->c_first,
pOrderStatusData->c_middle, pOrderStatusData->c_last);

                    c += sprintf(szForm+c, "Cust-Balance:
$%9.2f<BR> <BR>",
                                pOrderStatusData->c_balance);

                    c += wsprintf(szForm+c,
                                "Order-Number: %8.8d   Entry-Date:
%2.2d-%2.2d-%4.4d %2.2d:%2.2d:%2.2d   Carrier-Number:
%2.2d<BR>"
                                "Supply-W     Item-Id    Qty
Amount      Delivery-Date<BR>",
                                pOrderStatusData->o_id,
                                pOrderStatusData->o_entry_d.day,
                                pOrderStatusData->o_entry_d.month,
                                pOrderStatusData->o_entry_d.year,
                                pOrderStatusData->o_entry_d.hour,

pOrderStatusData->o_entry_d.minute,

pOrderStatusData->o_entry_d.second,
                                pOrderStatusData->o_carrier_id);

                    for(i=0; i< pOrderStatusData->o_ol_cnt; i++)
                    {
                                c += sprintf(szForm+c, "  %6.6d
%6.6d     %2.2d     $%8.2f      %2.2d-%2.2d-%4.4d<BR>",

pOrderStatusData->OL[i].ol_supply_w_id,

pOrderStatusData->OL[i].ol_i_id,

pOrderStatusData->OL[i].ol_quantity,

pOrderStatusData->OL[i].ol_amount,

pOrderStatusData->OL[i].ol_delivery_d.day,

pOrderStatusData->OL[i].ol_delivery_d.month,

pOrderStatusData->OL[i].ol_delivery_d.year);
                    }
                    strncpy( szForm+c, szBR, (15-i)*5 );
                    c += (15-i)*5;

                    strcpy(szForm+c,
                                "</font></PRE><HR><INPUT
TYPE=\"submit\" NAME=\"CMD\" VALUE=\"..NewOrder..\">"
                                "<INPUT TYPE=\"submit\"
NAME=\"CMD\" VALUE=\"..Payment..\">"
                                "<INPUT TYPE=\"submit\"
NAME=\"CMD\" VALUE=\"..Delivery..\">"
                                "<INPUT TYPE=\"submit\"
NAME=\"CMD\" VALUE=\"..Order-Status..\">"
                                "<INPUT TYPE=\"submit\"
NAME=\"CMD\" VALUE=\"..Stock-Level..\">"
                                "<INPUT TYPE=\"submit\"
NAME=\"CMD\" VALUE=\"..Exit..\">"
                                "</BODY></FORM></HTML>" );
          }
}

/* FUNCTION: MakeDeliveryForm
 *
 * COMMENTS:       The internal client buffer is created when the
terminal id is assigned and should not
 *                                                  be freed except when the
client terminal id is no longer needed.
 */

void MakeDeliveryForm(int iTermId, DELIVERY_DATA
*pDeliveryData, BOOL bInput, char *szForm)
{
          int           c;

          c = wsprintf(szForm,
                    "<HTML><HEAD><TITLE>TPC-C
Delivery</TITLE></HEAD><BODY>"
                    "<FORM ACTION=\"tpcc.dll\"
METHOD=\"GET\">"
                    "<INPUT TYPE=\"hidden\"
NAME=\"STATUSID\" VALUE=\"%d\">"
                    "<INPUT TYPE=\"hidden\" NAME=\"ERROR\"
VALUE=\"0\">"
                    "<INPUT TYPE=\"hidden\"
NAME=\"FORMID\" VALUE=\"%d\">"
                    "<INPUT TYPE=\"hidden\"
NAME=\"TERMID\" VALUE=\"%d\">"
                    "<INPUT TYPE=\"hidden\"
NAME=\"SYNCID\" VALUE=\"%d\">"
                    "<PRE><font face=\"Courier\">
     Delivery<BR>"
                    "Warehouse: %6.6d<BR> <BR>",
                    (!bInput && (pDeliveryData->exec_status_code
!= eOK)) ? ERR_TYPE_DELIVERY_POST : 0,
                    DELIVERY_FORM, iTermId,
Term.pClientData[iTermId].iSyncId,
Term.pClientData[iTermId].w_id);

          if ( bInput )
          {
                    strcpy( szForm+c,
                                "Carrier Number: <INPUT
NAME=\"OCD*\" SIZE=1><BR> <BR>"
                                "Execution Status: <BR> <BR>
<BR> <BR> <BR> <BR> <BR> <BR>"
                                " <BR> <BR> <BR> <BR> <BR>
<BR> <BR> <BR> </font></PRE><HR>"
```

```
                                "<INPUT TYPE=\"submit\"
NAME=\"CMD\" VALUE=\"Process\">"
                                "<INPUT TYPE=\"submit\"
NAME=\"CMD\" VALUE=\"Menu\">"
                                "</BODY></FORM></HTML>" );
        }
        else
        {
                wsprintf( szForm+c,
                                "Carrier Number: %2.2d<BR>
<BR>"
                                "Execution Status: %s <BR> <BR>
<BR> <BR> <BR> <BR> <BR> <BR>"
                                " <BR> <BR> <BR> <BR> <BR>
<BR> <BR> <BR> </font></PRE>"
                                "<HR><INPUT TYPE=\"submit\"
NAME=\"CMD\" VALUE=\"..NewOrder..\">"
                                "<INPUT TYPE=\"submit\"
NAME=\"CMD\" VALUE=\"..Payment..\">"
                                "<INPUT TYPE=\"submit\"
NAME=\"CMD\" VALUE=\"..Delivery..\">"
                                "<INPUT TYPE=\"submit\"
NAME=\"CMD\" VALUE=\"..Order-Status..\">"
                                "<INPUT TYPE=\"submit\"
NAME=\"CMD\" VALUE=\"..Stock-Level..\">"
                                "<INPUT TYPE=\"submit\"
NAME=\"CMD\" VALUE=\"..Exit..\">"
                                "</BODY></FORM></HTML>"

                                , pDeliveryData->o_carrier_id,
                                (pDeliveryData->exec_status_code
== eOK) ? "Delivery has been queued." : "Delivery Post Failed     "
                                );
        }
}

/* FUNCTION: ProcessNewOrderForm
 *
 * PURPOSE:          This function gets and validates the input data
from the new order form
 *                              filling in the required input variables.
it then calls the SQLNewOrder
 *                              transaction, constructs the output
form and writes it back to client
 *                              browser.
 */

void ProcessNewOrderForm(EXTENSION_CONTROL_BLOCK
*pECB, int iTermId, char *szBuffer)
{
        PNEW_ORDER_DATA                 pNewOrder;
        BOOL fLocalFlag = FALSE;

        pNewOrder =
Term.pClientData[iTermId].pTxn->BuffAddr_NewOrder();

        ZeroMemory(pNewOrder, sizeof(NEW_ORDER_DATA));
        pNewOrder->w_id = Term.pClientData[iTermId].w_id;
        GetNewOrderData(pECB->lpszQueryString, pNewOrder,
&fLocalFlag);

        Term.pClientData[iTermId].pTxn->NewOrder(fLocalFlag);

        pNewOrder =
Term.pClientData[iTermId].pTxn->BuffAddr_NewOrder();
        MakeNewOrderForm(iTermId, pNewOrder,
OUTPUT_FORM, szBuffer );
#ifdef COUNTSPLIT
        if (fLocalFlag)
                InterlockedIncrement(&gdwLocalNOCnt);
        else
                InterlockedIncrement(&gdwRemoteNOCnt);
#endif
}

/* FUNCTION: void ProcessPaymentForm
 *
 * PURPOSE:          This function gets and validates the input data
from the payment form
 *                              filling in the required input variables.
It then calls the SQLPayment
 *                              transaction, constructs the output
form and writes it back to client
 *                              browser.
 *
 * ARGUMENTS:     EXTENSION_CONTROL_BLOCK
*pECB     passed in structure pointer from inetsrv.
 *                                      int
                                iTermId     client browser terminal id
 *
 */

void ProcessPaymentForm(EXTENSION_CONTROL_BLOCK
*pECB, int iTermId, char *szBuffer)
{
        PPAYMENT_DATA pPayment;
        BOOL fLocalFlag = FALSE;

        pPayment =
Term.pClientData[iTermId].pTxn->BuffAddr_Payment();
        ZeroMemory(pPayment, sizeof(PAYMENT_DATA));
        pPayment->w_id = Term.pClientData[iTermId].w_id;
        GetPaymentData(pECB->lpszQueryString, pPayment,
&fLocalFlag);

        Term.pClientData[iTermId].pTxn->Payment(fLocalFlag);

        pPayment =
Term.pClientData[iTermId].pTxn->BuffAddr_Payment();
        MakePaymentForm(iTermId, pPayment, OUTPUT_FORM,
szBuffer);
#ifdef COUNTSPLIT
        if (fLocalFlag)
                InterlockedIncrement(&gdwLocalPayCnt);
        else
                InterlockedIncrement(&gdwRemotePayCnt);
#endif

}

/* FUNCTION: ProcessOrderStatusForm
 *
 * PURPOSE:          This function gets and validates the input data
from the Order Status
 *                              form filling in the required input
variables. It then calls the
 *                              SQLOrderStatus transaction,
constructs the output form and writes it
 *                              back to client browser.
 *
 * ARGUMENTS:     EXTENSION_CONTROL_BLOCK
*pECB     passed in structure pointer from inetsrv.
 *                                      int
                                iTermId     client browser terminal id
 *
 */
```

```
void ProcessOrderStatusForm(EXTENSION_CONTROL_BLOCK
*pECB, int iTermId, char *szBuffer)
{
	PORDER_STATUS_DATA	pOrderStatus;

	pOrderStatus =
Term.pClientData[iTermId].pTxn->BuffAddr_OrderStatus();
	ZeroMemory(pOrderStatus,
sizeof(ORDER_STATUS_DATA));
	pOrderStatus->w_id = Term.pClientData[iTermId].w_id;
	GetOrderStatusData(pECB->lpszQueryString,
pOrderStatus);

	Term.pClientData[iTermId].pTxn->OrderStatus();

	pOrderStatus =
Term.pClientData[iTermId].pTxn->BuffAddr_OrderStatus();
	MakeOrderStatusForm(iTermId, pOrderStatus,
OUTPUT_FORM, szBuffer);
}

/* FUNCTION: ProcessDeliveryForm
 *
 * PURPOSE:		This function gets and validates the input data
from the delivery form
 *				filling in the required input variables.
It then calls the PostDeliveryInfo
 *				Api, The client is then informed that
the transaction has been posted.
 *
 * ARGUMENTS:	EXTENSION_CONTROL_BLOCK
*pECB	passed in structure pointer from inetsrv.
 *					int
 *				iTermId	client browser terminal id
 *
 */

void ProcessDeliveryForm(EXTENSION_CONTROL_BLOCK
*pECB, int iTermId, char *szBuffer)
{
	char		*ptr = pECB->lpszQueryString;

	PDELIVERY_DATA pDelivery;

	pDelivery =
Term.pClientData[iTermId].pTxn->BuffAddr_Delivery();
	ZeroMemory(pDelivery, sizeof(DELIVERY_DATA));
	pDelivery->w_id = Term.pClientData[iTermId].w_id;

	pDelivery->o_carrier_id		= GetIntKeyValue(&ptr,
"OCD*", ERR_DELIVERY_MISSING_OCD_KEY,
ERR_DELIVERY_CARRIER_INVALID);
	if ( pDelivery->o_carrier_id > 10 || pDelivery->o_carrier_id
< 1 )
		throw new CWEBCLNT_ERR(
ERR_DELIVERY_CARRIER_ID_RANGE);

	if (dwNumDeliveryThreads)
	{
		//post delivery info
		if ( PostDeliveryInfo(pDelivery->w_id,
pDelivery->o_carrier_id) )
			pDelivery->exec_status_code =
eDeliveryFailed;
		else
			pDelivery->exec_status_code = eOK;
	}
	else // delivery is done synchronously if no delivery threads
configured
		Term.pClientData[iTermId].pTxn->Delivery();

	pDelivery =
Term.pClientData[iTermId].pTxn->BuffAddr_Delivery();
	MakeDeliveryForm(iTermId, pDelivery, OUTPUT_FORM,
szBuffer);
}

/* FUNCTION: ProcessStockLevelForm
 *
 * PURPOSE:		This function gets and validates the input data
from the Stock Level
 *				form filling in the required input
variables. It then calls the
 *				SQLStockLevel transaction,
constructs the output form and writes it
 *				back to client browser.
 *
 * ARGUMENTS:	EXTENSION_CONTROL_BLOCK
*pECB	passed in structure pointer from inetsrv.
 *					int
 *				iTermId	client browser terminal id
 *
 */

void ProcessStockLevelForm(EXTENSION_CONTROL_BLOCK
*pECB, int iTermId, char *szBuffer)
{
	char		*ptr = pECB->lpszQueryString;

	PSTOCK_LEVEL_DATA	pStockLevel;

	pStockLevel =
Term.pClientData[iTermId].pTxn->BuffAddr_StockLevel();
	ZeroMemory( pStockLevel,
sizeof(STOCK_LEVEL_DATA));

	pStockLevel->w_id = Term.pClientData[iTermId].w_id;
	pStockLevel->d_id = Term.pClientData[iTermId].d_id;

	pStockLevel->threshold = GetIntKeyValue(&ptr, "TT*",
ERR_STOCKLEVEL_MISSING_THRESHOLD_KEY,
ERR_STOCKLEVEL_THRESHOLD_INVALID);
	if ( pStockLevel->threshold >= 100 ||
pStockLevel->threshold < 0 )
		throw new CWEBCLNT_ERR(
ERR_STOCKLEVEL_THRESHOLD_RANGE);

	Term.pClientData[iTermId].pTxn->StockLevel();

	pStockLevel =
Term.pClientData[iTermId].pTxn->BuffAddr_StockLevel();
	MakeStockLevelForm(iTermId, pStockLevel,
OUTPUT_FORM, szBuffer);
}

/* FUNCTION: GetNewOrderData
 *
 * PURPOSE:		This function extracts and validates the new
order form data from an http command string.
 *
 * ARGUMENTS:	LPSTR
lpszQueryString		client browser http command string
 *					NEW_ORDER_DATA
*pNewOrderData		pointer to new order data structure
 *
```

```
 */

void GetNewOrderData (LPSTR lpszQueryString,
NEW_ORDER_DATA *pNewOrderData, BOOL *pfLocalFlag)
{
        char    szTmp[26];
        int             i;
        short   items;
        int             ol_i_id, ol_quantity;
        char    *ptr = lpszQueryString;
        BOOL    fRemoteFlag = FALSE;

        static char szSP[MAX_OL_NEW_ORDER_ITEMS][6] =
                { "SP00*", "SP01*", "SP02*", "SP03*",
"SP04*",
                  "SP05*", "SP06*", "SP07*", "SP08*",
"SP09*",
                  "SP10*", "SP11*", "SP12*", "SP13*", "SP14*"
};
        static char szIID[MAX_OL_NEW_ORDER_ITEMS][7] =
                { "IID00*", "IID01*", "IID02*", "IID03*",
"IID04*",
                  "IID05*", "IID06*", "IID07*", "IID08*",
"IID09*",
                  "IID10*", "IID11*", "IID12*", "IID13*",
"IID14*" };
        static char szQty[MAX_OL_NEW_ORDER_ITEMS][7] =
                { "Qty00*", "Qty01*", "Qty02*", "Qty03*",
"Qty04*",
                  "Qty05*", "Qty06*", "Qty07*", "Qty08*",
"Qty09*",
                  "Qty10*", "Qty11*", "Qty12*", "Qty13*",
"Qty14*" };

        pNewOrderData->d_id = GetIntKeyValue(&ptr, "DID*",
ERR_NEWORDER_FORM_MISSING_DID,
ERR_NEWORDER_DISTRICT_INVALID);
        pNewOrderData->c_id = GetIntKeyValue(&ptr, "CID*",
ERR_NEWORDER_CUSTOMER_KEY,
ERR_NEWORDER_CUSTOMER_INVALID);

        for(i=0, items=0; i<MAX_OL_NEW_ORDER_ITEMS;
i++)
        {
                GetKeyValue(&ptr, szSP[i], szTmp,
sizeof(szTmp), ERR_NEWORDER_MISSING_SUPPW_KEY);
                if ( szTmp[0] )
                {
                        if ( !IsNumeric(szTmp) )
                                throw new
CWEBCLNT_ERR( ERR_NEWORDER_SUPPW_INVALID );

pNewOrderData->OL[items].ol_supply_w_id = (long)atoi(szTmp);
                        if (!fRemoteFlag)
                        {
                                if
(!pbLocalWhsTbl[pNewOrderData->OL[items].ol_supply_w_id])

fRemoteFlag=TRUE;
                        }

                        ol_i_id =
pNewOrderData->OL[items].ol_i_id =
                                GetIntKeyValue(&ptr,
szIID[i], ERR_NEWORDER_MISSING_IID_KEY,
ERR_NEWORDER_ITEMID_INVALID);
                        if ( ol_i_id > 999999 || ol_i_id < 1 )
                                throw new
CWEBCLNT_ERR( ERR_NEWORDER_ITEMID_RANGE );

                        ol_quantity =
pNewOrderData->OL[items].ol_quantity =
                                GetIntKeyValue(&ptr,
szQty[i], ERR_NEWORDER_MISSING_QTY_KEY,
ERR_NEWORDER_QTY_INVALID);
                        if ( ol_quantity > 99 || ol_quantity < 1
)
                                throw new
CWEBCLNT_ERR( ERR_NEWORDER_QTY_RANGE );

                        items++;
                }
                else
                {       // nothing entered for supply
warehouse, so item id and qty must also be blank
                        GetKeyValue(&ptr, szIID[i], szTmp,
sizeof(szTmp), ERR_NEWORDER_MISSING_IID_KEY);
                        if ( szTmp[0] )
                                throw new
CWEBCLNT_ERR(
ERR_NEWORDER_ITEMID_WITHOUT_SUPPW);

                        GetKeyValue(&ptr, szQty[i], szTmp,
sizeof(szTmp), ERR_NEWORDER_MISSING_QTY_KEY);
                        if ( szTmp[0] )
                                throw new
CWEBCLNT_ERR( ERR_NEWORDER_QTY_WITHOUT_SUPPW
);
                }
        }
        if ( items == 0 )
                throw new CWEBCLNT_ERR(
ERR_NEWORDER_NOITEMS_ENTERED );

        pNewOrderData->o_ol_cnt = items;
        if (pfLocalFlag)
                *pfLocalFlag = !fRemoteFlag;
}

/* FUNCTION: GetPaymentData
 *
 * PURPOSE:         This function extracts and validates the payment
form data from an http command string.
 *
 * ARGUMENTS:     LPSTR
lpszQueryString                 client browser http command string
 *                                      PAYMENT_DATA
*pPaymentData                   pointer to payment data structure
 */

void GetPaymentData(LPSTR lpszQueryString, PAYMENT_DATA
*pPaymentData, BOOL *pfLocalFlag)
{
        char    szTmp[26];
        char    *ptr = lpszQueryString;
        BOOL    bCustIdBlank;
        BOOL    fRemoteFlag = FALSE;

        pPaymentData->d_id = GetIntKeyValue(&ptr, "DID*",
ERR_PAYMENT_MISSING_DID_KEY,
ERR_PAYMENT_DISTRICT_INVALID);

        GetKeyValue(&ptr, "CID*", szTmp, sizeof(szTmp),
ERR_PAYMENT_MISSING_CID_KEY);
        if ( szTmp[0] == 0 )
```

```
	{
		bCustIdBlank = TRUE;
		pPaymentData->c_id = 0;
	}
	else
	{	// parse customer id and verify that last name
was NOT entered
		bCustIdBlank = FALSE;
		if ( !IsNumeric(szTmp) )
			throw new CWEBCLNT_ERR(
ERR_PAYMENT_CUSTOMER_INVALID);
		pPaymentData->c_id = atoi(szTmp);
	}

	pPaymentData->c_w_id = GetIntKeyValue(&ptr, "CWI*",
ERR_PAYMENT_MISSING_CWI_KEY,
ERR_PAYMENT_CWI_INVALID);
	pPaymentData->c_d_id = GetIntKeyValue(&ptr, "CDI*",
ERR_PAYMENT_MISSING_CDI_KEY,
ERR_PAYMENT_CDI_INVALID);
	if (!pbLocalWhsTbl[pPaymentData->c_w_id])

fRemoteFlag=TRUE;


	if ( bCustIdBlank )
	{	// customer id is blank, so last name must be
entered
		GetKeyValue(&ptr, "CLT*", szTmp,
sizeof(szTmp), ERR_PAYMENT_MISSING_CLT_KEY);
		if ( szTmp[0] == 0 )
			throw new CWEBCLNT_ERR(
ERR_PAYMENT_MISSING_CID_CLT);

		_strupr( szTmp );
		if ( strlen(szTmp) > LAST_NAME_LEN )
			throw new CWEBCLNT_ERR(
ERR_PAYMENT_LAST_NAME_TO_LONG);
		strcpy(pPaymentData->c_last, szTmp);
	}
	else
	{	// parse customer id and verify that last name
was NOT entered
		GetKeyValue(&ptr, "CLT*", szTmp,
sizeof(szTmp), ERR_PAYMENT_MISSING_CLT_KEY);
		if ( szTmp[0] != 0 )
			throw new CWEBCLNT_ERR(
ERR_PAYMENT_CID_AND_CLT );
	}

	GetKeyValue(&ptr, "HAM*", szTmp, sizeof(szTmp),
ERR_PAYMENT_MISSING_HAM_KEY);
	if (!IsDecimal(szTmp))
		throw new CWEBCLNT_ERR(
ERR_PAYMENT_HAM_INVALID);
	pPaymentData->h_amount = atof(szTmp);
	if ( pPaymentData->h_amount >= 10000.00 ||
pPaymentData->h_amount < 0 )
		throw new CWEBCLNT_ERR(
ERR_PAYMENT_HAM_RANGE );
	if (pfLocalFlag)
		*pfLocalFlag = !fRemoteFlag;
}

/* FUNCTION: GetOrderStatusData
 *
 * PURPOSE:		This function extracts and validates the payment
form data from an http command string.
 *
 */
void GetOrderStatusData(LPSTR lpszQueryString,
ORDER_STATUS_DATA *pOrderStatusData)
{
	char	szTmp[26];
	char	*ptr = lpszQueryString;

	pOrderStatusData->d_id = GetIntKeyValue(&ptr, "DID*",
ERR_ORDERSTATUS_MISSING_DID_KEY,
ERR_ORDERSTATUS_DID_INVALID);

	GetKeyValue(&ptr, "CID*", szTmp, sizeof(szTmp),
ERR_ORDERSTATUS_MISSING_CID_KEY);
	if ( szTmp[0] == 0 )
	{	// customer id is blank, so last name must be
entered
		pOrderStatusData->c_id = 0;
		GetKeyValue(&ptr, "CLT*", szTmp,
sizeof(szTmp), ERR_ORDERSTATUS_MISSING_CLT_KEY);
		if ( szTmp[0] == 0 )
			throw new CWEBCLNT_ERR(
ERR_ORDERSTATUS_MISSING_CID_CLT);

		_strupr( szTmp );
		if ( strlen(szTmp) > LAST_NAME_LEN )
			throw new CWEBCLNT_ERR(
ERR_ORDERSTATUS_CLT_RANGE );
//		strcpy(pOrderStatusData->in_c_last, szTmp);
		strcpy(pOrderStatusData->c_last, szTmp);

	}
	else
	{	// parse customer id and verify that last name
was NOT entered
		if ( !IsNumeric(szTmp) )
			throw new CWEBCLNT_ERR(
ERR_ORDERSTATUS_CID_INVALID);
		pOrderStatusData->c_id = atoi(szTmp);
		GetKeyValue(&ptr, "CLT*", szTmp,
sizeof(szTmp), ERR_ORDERSTATUS_MISSING_CLT_KEY);
		if ( szTmp[0] != 0 )
			throw new CWEBCLNT_ERR(
ERR_ORDERSTATUS_CID_AND_CLT );
	}

}

/* FUNCTION: BOOL IsNumeric(char *ptr)
 *
 * PURPOSE:		This function determines if a string is numeric. It
fails if any characters other
 *			than numeric and null terminator are
present.
 *
 * ARGUMENTS:	char			*ptr
pointer to string to check.
 *
 * RETURNS:		BOOL	FALSE	if string is not
all numeric
 *
TRUE	if string contains only numeric characters i.e. '0' - '9'
 */

BOOL IsNumeric(char *ptr)
{
	if ( *ptr == 0 )
		return FALSE;
```

```
        while( *ptr && isdigit(*ptr) )
                ptr++;
        return ( !*ptr );
}

/* FUNCTION: BOOL IsDecimal(char *ptr)
 *
 * PURPOSE:        This function determines if a string is a
non-negative decimal value.
 *      It fails if any characters other than a series of numbers
followed by
 *                      a decimal point, another series of
numbers, and a null terminator are present.
 *
 * ARGUMENTS:   char                    *ptr
pointer to string to check.
 *
 * RETURNS:             BOOL    FALSE   if string is not
a valid non-negative decimal value
 *
TRUE    if string is OK
 */

BOOL IsDecimal(char *ptr)
{
        char *dotptr;
        BOOL  bValid;

        if ( *ptr == 0 )
                return FALSE;

        // find decimal point
        dotptr = strchr( ptr, '.' );
        if (dotptr == NULL)
                // no decimal point, so just check for numeric
                return IsNumeric(ptr);
        *dotptr = 0;  // temporarily replace decimal with a
terminator

        if ( *ptr != 0 )
                bValid = IsNumeric(ptr);
        // string starts with decimal point
        else if (*(dotptr+1) == 0)
                return FALSE;  // nothing but a decimal point is
bad
        else
                bValid = TRUE;

        if (*(dotptr+1) != 0)
                // check text after decimal point
                bValid &= IsNumeric(dotptr+1);

        *dotptr = '.';  // replace decimal point
        return bValid;
}
```

tpc.def

```
LIBRARY TPCC.DLL

EXPORTS

        GetExtensionVersion @1
        HttpExtensionProc   @2
        TerminateExtension  @3
```

tpcc.h

```
/*          FILE:               TPCC.H
 *                                      Microsoft TPC-C Kit Ver.
4.20.000
 *                                      Copyright Microsoft,
1999
 *          All Rights Reserved
 *
 *                                      Version 4.10.000 audited
by Richard Gimarc, Performance Metrics, 3/17/99
 *
 *          PURPOSE:            Header file for ISAPI TPCC.DLL,
defines structures and functions used in the isapi tpcc.dll.
 *
 */

//VERSION RESOURCE DEFINES
#define _APS_NEXT_RESOURCE_VALUE
        101
#define _APS_NEXT_COMMAND_VALUE
                40001
#define _APS_NEXT_CONTROL_VALUE
        1000
#define _APS_NEXT_SYMED_VALUE
        101

#define TP_MAX_RETRIES
                50


//note that the welcome form must be processed first as terminal ids
assigned here, once the
//terminal id is assigned then the forms can be processed in any order.
#define WELCOME_FORM
        1               //beginning form no term id assigned,
form id
#define MAIN_MENU_FORM
        2               //term id assigned main menu form id
#define NEW_ORDER_FORM
        3               //new order form id
#define PAYMENT_FORM
        4               //payment form id
#define DELIVERY_FORM
        5               //delivery form id
#define ORDER_STATUS_FORM
        6               //order status id
#define STOCK_LEVEL_FORM
7               //stock level form id

//This macro is used to prevent the compiler error unused formal
parameter
#define UNUSEDPARAM(x) (x = x)


//This structure defines the data necessary to keep distinct for each
terminal or client connection.
typedef struct _CLIENTDATA
{
        int                             iNextFree;
        //index of next free element or -1 if this entry in use.
        int                             w_id;
                //warehouse id assigned at welcome form
        int                             d_id;
                //district id assigned at welcome form
```

```
        int                             iSyncId;
        //syncronization id
        int                             iTickCount;
                //time of last access;

        CTPCC_BASE      *pTxn;

} CLIENTDATA,*PCLIENTDATA;


//This structure is used to define the operational interface for terminal
id support
typedef struct _TERM
{
        int                             iNumEntries;
                        //total allocated terminal array entries
        int                             iFreeList;
                        //next available terminal array
element or -1 if none
        int                             iMasterSyncId;
                        //syncronization id
        CLIENTDATA      *pClientData;
                //pointer to allocated client data
} TERM;

typedef TERM *PTERM;
                //pointer to terminal structure type


        enum WEBERROR
        {
                NO_ERR,
                ERR_COMMAND_UNDEFINED,
                ERR_D_ID_INVALID,
                ERR_DELIVERY_CARRIER_ID_RANGE,
                ERR_DELIVERY_CARRIER_INVALID,
                ERR_DELIVERY_MISSING_OCD_KEY,
                ERR_DELIVERY_THREAD_FAILED,
                ERR_GETPROCADDR_FAILED,
                ERR_HTML_ILL_FORMED,
                ERR_INVALID_SYNC_CONNECTION,
                ERR_INVALID_TERMID,
                ERR_LOADDLL_FAILED,
                ERR_MAX_CONNECTIONS_EXCEEDED,
                ERR_MEM_ALLOC_FAILED,
                ERR_MISSING_REGISTRY_ENTRIES,
                ERR_NEWORDER_CUSTOMER_INVALID,
                ERR_NEWORDER_CUSTOMER_KEY,
                ERR_NEWORDER_DISTRICT_INVALID,
                ERR_NEWORDER_FORM_MISSING_DID,
                ERR_NEWORDER_ITEMID_INVALID,
                ERR_NEWORDER_ITEMID_RANGE,

ERR_NEWORDER_ITEMID_WITHOUT_SUPPW,
                ERR_NEWORDER_MISSING_IID_KEY,
                ERR_NEWORDER_MISSING_QTY_KEY,
                ERR_NEWORDER_MISSING_SUPPW_KEY,
                ERR_NEWORDER_NOITEMS_ENTERED,
                ERR_NEWORDER_QTY_INVALID,
                ERR_NEWORDER_QTY_RANGE,

ERR_NEWORDER_QTY_WITHOUT_SUPPW,
                ERR_NEWORDER_SUPPW_INVALID,
                ERR_NO_SERVER_SPECIFIED,
                ERR_ORDERSTATUS_CID_AND_CLT,
                ERR_ORDERSTATUS_CID_INVALID,
                ERR_ORDERSTATUS_CLT_RANGE,
                ERR_ORDERSTATUS_DID_INVALID,
                ERR_ORDERSTATUS_MISSING_CID_CLT,
                ERR_ORDERSTATUS_MISSING_CID_KEY,
                ERR_ORDERSTATUS_MISSING_CLT_KEY,
                ERR_ORDERSTATUS_MISSING_DID_KEY,
                ERR_PAYMENT_CDI_INVALID,
                ERR_PAYMENT_CID_AND_CLT,
                ERR_PAYMENT_CUSTOMER_INVALID,
                ERR_PAYMENT_CWI_INVALID,
                ERR_PAYMENT_DISTRICT_INVALID,
                ERR_PAYMENT_HAM_INVALID,
                ERR_PAYMENT_HAM_RANGE,
                ERR_PAYMENT_LAST_NAME_TO_LONG,
                ERR_PAYMENT_MISSING_CDI_KEY,
                ERR_PAYMENT_MISSING_CID_CLT,
                ERR_PAYMENT_MISSING_CID_KEY,
                ERR_PAYMENT_MISSING_CLT,
                ERR_PAYMENT_MISSING_CLT_KEY,
                ERR_PAYMENT_MISSING_CWI_KEY,
                ERR_PAYMENT_MISSING_DID_KEY,
                ERR_PAYMENT_MISSING_HAM_KEY,

ERR_STOCKLEVEL_MISSING_THRESHOLD_KEY,

ERR_STOCKLEVEL_THRESHOLD_INVALID,
                ERR_STOCKLEVEL_THRESHOLD_RANGE,
                ERR_VERSION_MISMATCH,
                ERR_W_ID_INVALID
        };

class CWEBCLNT_ERR : public CBaseErr
{
        public:

                CWEBCLNT_ERR(WEBERROR Err)
                {
                        m_Error = Err;
                        m_szTextDetail = NULL;
                        m_SystemErr = 0;
                        m_szErrorText = NULL;
                };

                CWEBCLNT_ERR(WEBERROR Err, char
*szTextDetail, DWORD dwSystemErr)
                {
                        m_Error = Err;
                        m_szTextDetail = new
char[strlen(szTextDetail)+1];
                        strcpy( m_szTextDetail, szTextDetail
);
                        m_SystemErr = dwSystemErr;
                        m_szErrorText = NULL;
                };

                ~CWEBCLNT_ERR()
                {
                        if (m_szTextDetail != NULL)
                                delete [] m_szTextDetail;
                        if (m_szErrorText != NULL)
                                delete [] m_szErrorText;
                };

                WEBERROR        m_Error;
                char            *m_szTextDetail;      //
                char            *m_szErrorText;
                DWORD           m_SystemErr;

                int ErrorType() {return
ERR_TYPE_WEBDLL;};
```

```
                    int ErrorNum() {return m_Error;};
                    char *ErrorText();

};

//These constants have already been defined in engstut.h, but since we
do
//not want to include it in the delisrv executable
#define     TXN_EVENT_START                 2
#define     TXN_EVENT_STOP          4
#define TXN_EVENT_WARNING           6
//used to record a warning into the log

//function prototypes

BOOL APIENTRY DllMain(HANDLE hModule, DWORD
ul_reason_for_call, LPVOID lpReserved);
void WriteMessageToEventLog(LPTSTR lpszMsg);
void ProcessQueryString(EXTENSION_CONTROL_BLOCK*pECB,
int *pCmd, int *pFormId, int *pTermId, int *pSyncId);
void WelcomeForm(EXTENSION_CONTROL_BLOCK*pECB, char
*szBuffer);
void SubmitCmd(EXTENSION_CONTROL_BLOCK *pECB, char
*szBuffer);
void BeginCmd(EXTENSION_CONTROL_BLOCK *pECB, int
iFormId, int iTermId);
void ProcessCmd(EXTENSION_CONTROL_BLOCK*pECB, int
iFormId, int iTermId);
void StatsCmd(EXTENSION_CONTROL_BLOCK *pECB, char
*szBuffer);
void ErrorMessage(EXTENSION_CONTROL_BLOCK*pECB, int
iError, int iErrorType, char *szMsg, int iTermId);
void GetKeyValue(char **pQueryString, char *pKey, char *pValue,
int iMax, WEBERROR err);
int  GetIntKeyValue(char **pQueryString, char *pKey, WEBERROR
NoKeyErr, WEBERROR NotIntErr);
void TermInit(void);
void TermDeleteAll(void);
int  TermAdd(void);
void TermDelete(int id);
void ErrorForm(EXTENSION_CONTROL_BLOCK*pECB, int
iType, int iErrorNum, int iTermId, int iSyncId, char *szErrorText, char
*szBuffer );
void MakeMainMenuForm(int iTermId, int iSyncId, char *szForm);
void MakeStockLevelForm(int iTermId, STOCK_LEVEL_DATA
*pStockLevelData, BOOL bInput, char *szForm);
void MakeNewOrderForm(int iTermId, NEW_ORDER_DATA
*pNewOrderData, BOOL bInput, char *szForm);
void MakePaymentForm(int iTermId, PAYMENT_DATA
*pPaymentData, BOOL bInput, char *szForm);
void MakeOrderStatusForm(int iTermId, ORDER_STATUS_DATA
*pOrderStatusData, BOOL bInput, char *szForm);
void MakeDeliveryForm(int iTermId, DELIVERY_DATA
*pDeliveryData, BOOL bInput, char *szForm);
void ProcessNewOrderForm(EXTENSION_CONTROL_BLOCK
*pECB, int iTermId, char *szBuffer);
void ProcessPaymentForm(EXTENSION_CONTROL_BLOCK
*pECB, int iTermId, char *szBuffer);
void ProcessOrderStatusForm(EXTENSION_CONTROL_BLOCK
*pECB, int iTermId, char *szBuffer);
void ProcessDeliveryForm(EXTENSION_CONTROL_BLOCK
*pECB, int iTermId, char *szBuffer);
void ProcessStockLevelForm(EXTENSION_CONTROL_BLOCK
*pECB, int iTermId, char *szBuffer);
void GetNewOrderData(LPSTR lpszQueryString,
NEW_ORDER_DATA *pNewOrderData, BOOL *pfLocalFlag);
void GetPaymentData(LPSTR lpszQueryString, PAYMENT_DATA
*pPaymentData,BOOL *pfLocalFlag);
void GetOrderStatusData(LPSTR lpszQueryString,
ORDER_STATUS_DATA *pOrderStatusData);
BOOL PostDeliveryInfo(long w_id, short o_carrier_id);
BOOL IsNumeric(char *ptr);
BOOL IsDecimal(char *ptr);
void DeliveryWorkerThread(void *ptr);
```

tpcc.rc

```
//Microsoft Developer Studio generated resource script.
//
#include "resource.h"

#define APSTUDIO_READONLY_SYMBOLS
////////////////////////////////////////////////////////////////////////
//
// Generated from the TEXTINCLUDE 2 resource.
//
#include "afxres.h"

////////////////////////////////////////////////////////////////////////
#undef APSTUDIO_READONLY_SYMBOLS

////////////////////////////////////////////////////////////////////////
// English (U.S.) resources

#if !defined(AFX_RESOURCE_DLL) || defined(AFX_TARG_ENU)
#ifdef _WIN32
LANGUAGE LANG_ENGLISH, SUBLANG_ENGLISH_US
#pragma code_page(1252)
#endif //_WIN32

#ifndef _MAC
////////////////////////////////////////////////////////////////////////
//
// Version
//

VS_VERSION_INFO VERSIONINFO
 FILEVERSION 0,4,0,0
 PRODUCTVERSION 0,4,0,0
 FILEFLAGSMASK 0x3fL
#ifdef _DEBUG
 FILEFLAGS 0x1L
#else
 FILEFLAGS 0x0L
#endif
 FILEOS 0x40004L
 FILETYPE 0x2L
 FILESUBTYPE 0x0L
BEGIN
    BLOCK "StringFileInfo"
    BEGIN
        BLOCK "040904b0"
        BEGIN
            VALUE "Comments", "TPC-C HTML DLL Server (DBLIB)\0"
            VALUE "CompanyName", "Microsoft\0"
            VALUE "FileDescription", "TPC-C HTML DLL Server
(DBLIB)\0"
            VALUE "FileVersion", "0, 4, 0, 0\0"
            VALUE "InternalName", "tpcc\0"
            VALUE "LegalCopyright", "Copyright © 1997\0"
            VALUE "OriginalFilename", "tpcc.dll\0"
            VALUE "ProductName", "Microsoft tpcc\0"
            VALUE "ProductVersion", "0, 4, 0, 0\0"
        END
```

```
    END
    BLOCK "VarFileInfo"
    BEGIN
        VALUE "Translation", 0x409, 1200
    END
END

#endif    // !_MAC


#ifdef APSTUDIO_INVOKED
//////////////////////////////////////////////////////////////////////////////
//
// TEXTINCLUDE
//

1 TEXTINCLUDE DISCARDABLE
BEGIN
    "resource.h\0"
END

2 TEXTINCLUDE DISCARDABLE
BEGIN
    "#include ""afxres.h""\r\n"
    "\0"
END

3 TEXTINCLUDE DISCARDABLE
BEGIN
    "\r\n"
    "\0"
END

#endif    // APSTUDIO_INVOKED


//////////////////////////////////////////////////////////////////////////////
//
// Dialog
//

IDD_DIALOG1 DIALOG DISCARDABLE  0, 0, 186, 95
STYLE DS_MODALFRAME | WS_POPUP | WS_CAPTION |
WS_SYSMENU
CAPTION "Dialog"
FONT 8, "MS Sans Serif"
BEGIN
    DEFPUSHBUTTON   "OK",IDOK,129,7,50,14
    PUSHBUTTON      "Cancel",IDCANCEL,129,24,50,14
END


//////////////////////////////////////////////////////////////////////////////
//
// DESIGNINFO
//

#ifdef APSTUDIO_INVOKED
GUIDELINES DESIGNINFO DISCARDABLE
BEGIN
    IDD_DIALOG1, DIALOG
    BEGIN
        LEFTMARGIN, 7
        RIGHTMARGIN, 179
        TOPMARGIN, 7
        BOTTOMMARGIN, 88
    END
END

#endif    // APSTUDIO_INVOKED

#endif    // English (U.S.) resources
//////////////////////////////////////////////////////////////////////////////



#ifndef APSTUDIO_INVOKED
//////////////////////////////////////////////////////////////////////////////
//
// Generated from the TEXTINCLUDE 3 resource.
//


//////////////////////////////////////////////////////////////////////////////
#endif    // not APSTUDIO_INVOKED
```

tpcc_com.cpp

```
/*          FILE:                   TPCC_COM.CPP
 *                                          Microsoft TPC-C Kit Ver.
4.20.000
 *                                          Copyright Microsoft,
1999
 *          All Rights Reserved
 *
 *                                          not yet audited
 *
 *          PURPOSE:            Source file for TPC-C COM+ class
implementation.
 *          Contact:    Charles Levine (clevine@microsoft.com)
 *
 *  Change history:
 *                      4.20.000 - first version
 */

// needed for CoinitializeEx
#define _WIN32_WINNT 0x0400

#include <windows.h>

// need to declare functions for export
#define DllDecl  __declspec( dllexport )

#include "..\..\common\src\trans.h"                         //tpckit
transaction header contains definations of structures specific to TPC-C
#include "..\..\common\src\error.h"
#include "..\..\common\src\txn_base.h"
#include "tpcc_com.h"

#include "..\..\tpcc_com_ps\src\tpcc_com_ps_i.c"
#include "..\..\tpcc_com_all\src\tpcc_com_all_i.c"

#include "..\..\tpcc_com_remote_ps\src\tpcc_com_remote_ps_i.c"
#include "..\..\tpcc_com_remote\src\tpcc_com_remote_i.c"


// wrapper routine for class constructor
__declspec(dllexport) CTPCC_COM* CTPCC_COM_new(BOOL
bSinglePool)
{
            return new CTPCC_COM(bSinglePool);
}

CTPCC_COM::CTPCC_COM(BOOL bSinglePool)
{
```

```
	HRESULT hr = NULL;
	long lRet = 0;
	ULONG ulTmpSize = 0;

	m_bSinglePool = bSinglePool;

	m_pNewOrder			= NULL;
	m_pPayment			= NULL;
	m_pStockLevel		= NULL;
	m_pOrderStatus		= NULL;
	m_p_remNewOrder		= NULL;
	m_p_remPayment		= NULL;
	m_p_remStockLevel	= NULL;
	m_p_remOrderStatus	= NULL;

/*
	m_pTxn =
(COM_DATA*)CoTaskMemAlloc(sizeof(COM_DATA));
	if (!m_pTxn)
		throw new CCOMERR( E_FAIL );
*/
	ulTmpSize = (ULONG) sizeof(COM_DATA);
	VariantInit(&m_vTxn);
	m_vTxn.vt = VT_SAFEARRAY;


	m_vTxn.parray = SafeArrayCreateVector(

VT_UI1,

ulTmpSize,

ulTmpSize);
	if (!m_vTxn.parray)
		throw new CCOMERR( E_FAIL );

	memset((void*)m_vTxn.parray->pvData,0,ulTmpSize);

	m_pTxn = (COM_DATA*)m_vTxn.parray->pvData;

	hr = CoInitializeEx(NULL, COINIT_MULTITHREADED);
	if (FAILED(hr))
	{
		throw new CCOMERR( hr );
	}

	// create components
	if (m_bSinglePool)
	{
		hr = CoCreateInstance(CLSID_TPCC, NULL,
CLSCTX_SERVER, IID_ITPCC, (void **)&m_pNewOrder);
		if (FAILED(hr))
			throw new CCOMERR(hr);

		hr = CoCreateInstance(CLSID_TPCCrem,
NULL, CLSCTX_SERVER, IID_ITPCCrem, (void
**)&m_p_remNewOrder);
		if (FAILED(hr))
			throw new CCOMERR(hr);

		// all local txns will use same component
		m_pPayment = m_pNewOrder;
		m_pStockLevel = m_pNewOrder;
		m_pOrderStatus = m_pNewOrder;

		// all remote txns will use same component
		m_p_remPayment=m_p_remNewOrder;
		m_p_remStockLevel = m_p_remNewOrder;
		m_p_remOrderStatus = m_p_remNewOrder;

	}
	else
	{
		// use different components for each txn

		hr = CoCreateInstance(CLSID_NewOrder,
NULL, CLSCTX_SERVER, IID_ITPCC, (void **)&m_pNewOrder);
		if (FAILED(hr))
			throw new CCOMERR(hr);

		hr = CoCreateInstance(CLSID_Payment, NULL,
CLSCTX_SERVER, IID_ITPCC, (void **)&m_pPayment);
		if (FAILED(hr))
			throw new CCOMERR(hr);

		hr = CoCreateInstance(CLSID_StockLevel,
NULL, CLSCTX_SERVER, IID_ITPCC, (void **)&m_pStockLevel);
		if (FAILED(hr))
			throw new CCOMERR(hr);

		hr = CoCreateInstance(CLSID_OrderStatus,
NULL, CLSCTX_SERVER, IID_ITPCC, (void **)&m_pOrderStatus);
		if (FAILED(hr))
			throw new CCOMERR(hr);
	}

	// call setcomplete to release each component back into pool
	hr = m_pNewOrder->CallSetComplete();
	if (FAILED(hr))
		throw new CCOMERR(hr);

	hr = m_p_remNewOrder->CallSetComplete();
	if (FAILED(hr))
		throw new CCOMERR(hr);

	if (!m_bSinglePool)
	{
		hr = m_pPayment->CallSetComplete();
		if (FAILED(hr))
			throw new CCOMERR(hr);

		hr = m_pStockLevel->CallSetComplete();
		if (FAILED(hr))
			throw new CCOMERR(hr);

		hr = m_pOrderStatus->CallSetComplete();
		if (FAILED(hr))
			throw new CCOMERR(hr);
	}
}

CTPCC_COM::~CTPCC_COM()
{
	if (m_pTxn)
		SafeArrayDestroy(m_vTxn.parray);

	ReleaseInterface(m_pNewOrder);

	ReleaseInterface(m_p_remNewOrder);

	if (!m_bSinglePool)
	{
		ReleaseInterface(m_pPayment);
		ReleaseInterface(m_pStockLevel);
		ReleaseInterface(m_pOrderStatus);
	}
```

```
	CoUninitialize();
}
/*void CTPCC_COM::NewOrder()
{
	VARIANT	vTxn_out;
	HRESULT hr = m_pNewOrder->NewOrder(m_vTxn,
&vTxn_out);

	if (FAILED(hr))
		throw new CCOMERR( hr );
	memcpy(m_pTxn, (void
*)vTxn_out.parray->pvData,vTxn_out.parray->rgsabound[0].cElement
s);
	SafeArrayDestroy(vTxn_out.parray);

	if ( m_pTxn->ErrorType != ERR_SUCCESS )
		throw new CCOMERR( m_pTxn->ErrorType,
m_pTxn->error );
}
*/
void CTPCC_COM::NewOrder(BOOL fLocal)
{
	VARIANT	vTxn_out;
	HRESULT hr;
	if (fLocal)
	 hr = m_pNewOrder->NewOrder(m_vTxn, &vTxn_out);
	else
	 hr = m_p_remNewOrder->NewOrder(m_vTxn,
&vTxn_out);

	if (FAILED(hr))
		throw new CCOMERR( hr );
	memcpy(m_pTxn, (void
*)vTxn_out.parray->pvData,vTxn_out.parray->rgsabound[0].cElement
s);
	SafeArrayDestroy(vTxn_out.parray);

	if ( m_pTxn->ErrorType != ERR_SUCCESS )
		throw new CCOMERR( m_pTxn->ErrorType,
m_pTxn->error );
}
/*void CTPCC_COM::Payment()
{
	VARIANT	vTxn_out;
	HRESULT hr = m_pPayment->Payment(m_vTxn,
&vTxn_out);

	if (FAILED(hr))
		throw new CCOMERR( hr );
	memcpy(m_pTxn, (void
*)vTxn_out.parray->pvData,vTxn_out.parray->rgsabound[0].cElement
s);
	SafeArrayDestroy(vTxn_out.parray);

	if ( m_pTxn->ErrorType != ERR_SUCCESS )
		throw new CCOMERR( m_pTxn->ErrorType,
m_pTxn->error );
}
*/
void CTPCC_COM::Payment(BOOL fLocal)
{
	VARIANT	vTxn_out;
	HRESULT hr;
	if (fLocal)
		hr = m_pPayment->Payment(m_vTxn,
&vTxn_out);
	else
		hr = m_p_remPayment->Payment(m_vTxn,
&vTxn_out);

	if (FAILED(hr))
		throw new CCOMERR( hr );
	memcpy(m_pTxn, (void
*)vTxn_out.parray->pvData,vTxn_out.parray->rgsabound[0].cElement
s);
	SafeArrayDestroy(vTxn_out.parray);

	if ( m_pTxn->ErrorType != ERR_SUCCESS )
		throw new CCOMERR( m_pTxn->ErrorType,
m_pTxn->error );
}

void CTPCC_COM::StockLevel()
{
	VARIANT	vTxn_out;

	HRESULT hr = m_pStockLevel->StockLevel(m_vTxn,
&vTxn_out);
	if (FAILED(hr))
		throw new CCOMERR( hr );
	memcpy(m_pTxn, (void
*)vTxn_out.parray->pvData,vTxn_out.parray->rgsabound[0].cElement
s);
	SafeArrayDestroy(vTxn_out.parray);

	if ( m_pTxn->ErrorType != ERR_SUCCESS )
		throw new CCOMERR( m_pTxn->ErrorType,
m_pTxn->error );
}

void CTPCC_COM::OrderStatus()
{
	VARIANT	vTxn_out;

	HRESULT hr = m_pOrderStatus->OrderStatus(m_vTxn,
&vTxn_out);
	if (FAILED(hr))
		throw new CCOMERR( hr );
	memcpy(m_pTxn, (void
*)vTxn_out.parray->pvData,vTxn_out.parray->rgsabound[0].cElement
s);
	SafeArrayDestroy(vTxn_out.parray);

	if ( m_pTxn->ErrorType != ERR_SUCCESS )
		throw new CCOMERR( m_pTxn->ErrorType,
m_pTxn->error );
}
```

tpcc_com.h

```
/*	FILE:		TPCC_COM.H
 *					Microsoft TPC-C Kit Ver.
4.20.000
 *					Copyright Microsoft,
1999
 *	All Rights Reserved
 *
 *					not yet audited
 *
```

```
 *          PURPOSE:            Header file for TPC-C COM+ class implementation.
 *
 *  Change history:
 *                      4.20.000 - first version
 */

#pragma once

#include <stdio.h>
#include "..\..\tpcc_com_ps\src\tpcc_com_ps.h"
#include "..\..\tpcc_com_remote_ps\src\tpcc_com_remote_ps.h"

// need to declare functions for import, unless define has already been created
// by the DLL's .cpp module for export.
#ifndef DllDecl
#define DllDecl  __declspec( dllimport )
#endif

class CCOMERR : public CBaseErr
{
        private:
                char m_szErrorText[64];

        public:
                // use this interface for genuine COM errors
                CCOMERR( HRESULT hr )
                {
                        m_hr = hr;
                        m_iErrorType = 0;
                        m_iError = 0;
                }

                // use this interface to impersonate a non-COM error type
                CCOMERR( int iErrorType, int iError )
                {
                        m_iErrorType = iErrorType;
                        m_iError = iError;
                        m_hr = S_OK;
                }

                int             m_hr;
                int             m_iErrorType;
                int             m_iError;

                // A CCOMERR class can impersonate another class, which happens if the error
                // was not actually a COM Services error, but was simply transmitted back via COM.
                int ErrorType()
                {
                        if (m_iErrorType == 0)
                                return ERR_TYPE_COM;
                        else
                                return m_iErrorType;
                }

                int ErrorNum() {return m_hr;}

                char *ErrorText()
                {
                        if (m_hr == S_OK)
                                sprintf( m_szErrorText, "Error: Class %d, error # %d", m_iErrorType, m_iError );
                        else
                                sprintf( m_szErrorText, "Error: COM HRESULT %x", m_hr );
                        return m_szErrorText;
                }
};

class DllDecl CTPCC_COM : public CTPCC_BASE
{
        private:
                BOOL m_bSinglePool;

                // COM Interface pointers
                ITPCC*                  m_pNewOrder;
                ITPCC*                  m_pPayment;
                ITPCC*                  m_pStockLevel;
                ITPCC*                  m_pOrderStatus;
                ITPCCrem*               m_p_remNewOrder;
                ITPCCrem*               m_p_remPayment;
                ITPCCrem*               m_p_remStockLevel;
                ITPCCrem*               m_p_remOrderStatus;

                struct COM_DATA
```

```
                {
                        int ErrorType;
                        int error;
                        union
                        {
                                NEW_ORDER_DATA
        NewOrder;
                                PAYMENT_DATA
Payment;
                                DELIVERY_DATA
Delivery;
                                STOCK_LEVEL_DATA
StockLevel;

ORDER_STATUS_DATA       OrderStatus;
                        } u;
                } *m_pTxn;


                VARIANT m_vTxn;
        public:
                CTPCC_COM(BOOL bSinglePool);
                ~CTPCC_COM(void);


                inline PNEW_ORDER_DATA
BuffAddr_NewOrder()             { return
&m_pTxn->u.NewOrder;    };
                inline PPAYMENT_DATA
BuffAddr_Payment()      { return &m_pTxn->u.Payment;    };
                inline PDELIVERY_DATA
BuffAddr_Delivery()     { return &m_pTxn->u.Delivery;   };
                inline PSTOCK_LEVEL_DATA
BuffAddr_StockLevel()   { return &m_pTxn->u.StockLevel; };
                inline PORDER_STATUS_DATA
BuffAddr_OrderStatus()  { return &m_pTxn->u.OrderStatus;
};


//              void NewOrder           ();
                void NewOrder           (BOOL
fLocal);
//              void Payment            ();
                void Payment            (BOOL
fLocal);
                void StockLevel         ();
                void OrderStatus        ();
                void Delivery           () { throw new
CCOMERR(E_NOTIMPL); }  // not supported
};



inline void ReleaseInterface(IUnknown *pUnk)
{
        if (pUnk)
        {
                pUnk->Release();
                pUnk = NULL;
        }
}



// wrapper routine for class constructor
extern "C" __declspec(dllexport) CTPCC_COM*
CTPCC_COM_new(BOOL);


typedef CTPCC_COM* (TYPE_CTPCC_COM)(BOOL);
```

tpcc_com_all.cpp

```
/*      FILE:           TPCC_COM_ALL.CPP
 *                              Microsoft TPC-C Kit Ver.
4.20.000
 *                              Copyright Microsoft,
1999
 *      All Rights Reserved
 *
 *                              Version 4.10.000 audited
by Richard Gimarc, Performance Metrics, 3/17/99
 *
 *      PURPOSE:        Implementation for TPC-C Tuxedo
class.
 *      Contact:  Charles Levine (clevine@microsoft.com)
 *
 *  Change history:
 *              4.20.000 - updated rev number to match kit
 */

#define STRICT
#define _WIN32_WINNT 0x0400
#define _ATL_APARTMENT_THREADED

#include <stdio.h>
#include <atlbase.h>
//You may derive a class from CComModule and use it if you want to
override
//something, but do not change the name of _Module
extern CComModule _Module;

#include <atlcom.h>
#include <initguid.h>
#include <transact.h>
#include <atlimpl.cpp>
#include <comsvcs.h>

#include <sqltypes.h>
#include <sql.h>
#include <sqlext.h>

#include "tpcc_com_ps.h"
#include "..\..\common\src\trans.h"
        //tpckit transaction header contains definations of structures
specific to TPC-C
```

```
#include "..\..\common\src\txn_base.h"
#include "..\..\common\src\error.h"
#include "..\..\common\src\ReadRegistry.h"
#include "..\..\db_dblib_dll\src\tpcc_dblib.h"                    //
DBLIB implementation of TPC-C txns
#include "..\..\db_odbc_dll\src\tpcc_odbc.h"          // ODBC
implementation of TPC-C txns


#include "resource.h"
#include "tpcc_com_all.h"
#include "tpcc_com_all_i.c"
#include "Methods.h"
#include "..\..\tpcc_com_ps\src\tpcc_com_ps_i.c"
#include "..\..\common\src\ReadRegistry.cpp"


CComModule _Module;

BEGIN_OBJECT_MAP(ObjectMap)
        OBJECT_ENTRY(CLSID_TPCC, CTPCC)
        OBJECT_ENTRY(CLSID_NewOrder, CNewOrder)
        OBJECT_ENTRY(CLSID_OrderStatus, COrderStatus)
        OBJECT_ENTRY(CLSID_Payment, CPayment)
        OBJECT_ENTRY(CLSID_StockLevel, CStockLevel)
END_OBJECT_MAP()


// configuration settings from registry
TPCCREGISTRYDATA        Reg;
char
szMyComputerName[MAX_COMPUTERNAME_LENGTH+1];

static  HINSTANCE hLibInstanceDb = NULL;

TYPE_CTPCC_DBLIB        *pCTPCC_DBLIB_new;
TYPE_CTPCC_ODBC                 *pCTPCC_ODBC_new;


////////////////////////////////////////////////////////////////////////
// DLL Entry Point

extern "C"
BOOL WINAPI DllMain(HINSTANCE hInstance, DWORD
dwReason, LPVOID /*lpReserved*/)
{
        char szDllName[128];

        try
        {
                if (dwReason == DLL_PROCESS_ATTACH)
                {
                        _Module.Init(ObjectMap, hInstance);

DisableThreadLibraryCalls(hInstance);

                        DWORD dwSize =
MAX_COMPUTERNAME_LENGTH+1;

GetComputerName(szMyComputerName, &dwSize);
                        szMyComputerName[dwSize] = 0;

                        if ( ReadTPCCRegistrySettings(
&Reg ) )
                                throw new
CCOMPONENT_ERR( ERR_MISSING_REGISTRY_ENTRIES);

                        if (Reg.eDB_Protocol == DBLIB)
                        {
                                strcpy( szDllName,
Reg.szPath );
                                strcat( szDllName,
"tpcc_dblib.dll");
                                hLibInstanceDb =
LoadLibrary( szDllName );
                                if (hLibInstanceDb ==
NULL)
                                        throw new
CCOMPONENT_ERR( ERR_LOADDLL_FAILED,szDllName,
GetLastError() );

                                // get function pointer to
wrapper for class constructor
                                pCTPCC_DBLIB_new =
(TYPE_CTPCC_DBLIB*)
GetProcAddress(hLibInstanceDb,"CTPCC_DBLIB_new");
                                if (pCTPCC_DBLIB_new
== NULL)
                                        throw new
CCOMPONENT_ERR( ERR_GETPROCADDR_FAILED,
szDllName, GetLastError() );
                        }
                        else if (Reg.eDB_Protocol ==
ODBC)
                        {
                                strcpy( szDllName,
Reg.szPath );
                                strcat( szDllName,
"tpcc_odbc.dll");
                                hLibInstanceDb =
LoadLibrary( szDllName );
                                if (hLibInstanceDb ==
NULL)
                                        throw new
CCOMPONENT_ERR( ERR_LOADDLL_FAILED,szDllName,
GetLastError() );

                                // get function pointer to
wrapper for class constructor
                                pCTPCC_ODBC_new =
(TYPE_CTPCC_ODBC*)
GetProcAddress(hLibInstanceDb,"CTPCC_ODBC_new");
                                if (pCTPCC_ODBC_new
== NULL)
                                        throw new
CCOMPONENT_ERR( ERR_GETPROCADDR_FAILED,
szDllName, GetLastError() );
                        }
                        else
                                throw new
CCOMPONENT_ERR( ERR_UNKNOWN_DB_PROTOCOL );
                }
                else if (dwReason ==
DLL_PROCESS_DETACH)
                        _Module.Term();

        }
        catch (CBaseErr *e)
        {
                WriteMessageToEventLog(e->ErrorText());
                delete e;
                return FALSE;
        }
        catch (...)
        {
```

```
                        WriteMessageToEventLog(TEXT("Unhandled
exception in object DllMain"));
                        return FALSE;
        }

        return TRUE;            // OK
}

////////////////////////////////////////////////////////////////////////
// Used to determine whether the DLL can be unloaded by OLE

STDAPI DllCanUnloadNow(void)
{
        return (_Module.GetLockCount()==0) ? S_OK : S_FALSE;
}

////////////////////////////////////////////////////////////////////////
// Returns a class factory to create an object of the requested type

STDAPI DllGetClassObject(REFCLSID rclsid, REFIID riid, LPVOID*
ppv)
{
        return _Module.GetClassObject(rclsid, riid, ppv);
}

////////////////////////////////////////////////////////////////////////
// DllRegisterServer - Adds entries to the system registry

STDAPI DllRegisterServer(void)
{
        // registers object, typelib and all interfaces in typelib
        return _Module.RegisterServer(TRUE);
}

////////////////////////////////////////////////////////////////////////
// DllUnregisterServer - Removes entries from the system registry

STDAPI DllUnregisterServer(void)
{
        _Module.UnregisterServer();
        return S_OK;
}


static void WriteMessageToEventLog(LPTSTR lpszMsg)
{
   TCHAR   szMsg[256];
   HANDLE  hEventSource;
   LPTSTR  lpszStrings[2];

   // Use event logging to log the error.
   //
   hEventSource = RegisterEventSource(NULL,
TEXT("tpcc_com_all.dll"));

   _stprintf(szMsg, TEXT("Error in COM+ TPC-C Component: "));
   lpszStrings[0] = szMsg;
   lpszStrings[1] = lpszMsg;

   if (hEventSource != NULL)
        {
      ReportEvent(hEventSource, // handle of event source
        EVENTLOG_ERROR_TYPE,  // event type
        0,              // event category
        0,              // event ID
        NULL,               // current user's SID
        2,              // strings in  lpszStrings
        0,              // no bytes of raw data
        (LPCTSTR *)lpszStrings,    // array of error strings
        NULL);              // no raw data

      (VOID) DeregisterEventSource(hEventSource);
   }
}

inline void ReleaseInterface(IUnknown *pUnk)
{
        if (pUnk)
        {
                pUnk->Release();
                pUnk = NULL;
        }
}

/* FUNCTION: CCOMPONENT_ERR::ErrorText
 *
 */

char* CCOMPONENT_ERR::ErrorText(void)
{
        static SERRORMSG errorMsgs[] =
        {
                { ERR_MISSING_REGISTRY_ENTRIES,
"Required entries missing from registry."
},
                { ERR_LOADDLL_FAILED,
"Load of DLL failed.  DLL="
                        },
                { ERR_GETPROCADDR_FAILED,
"Could not map proc in DLL.  GetProcAddr error.  DLL="          },
                { ERR_UNKNOWN_DB_PROTOCOL,
"Unknown database protocol specified in registry."              },
                { 0,
                ""


                }
        };

        char szTmp[256];
        int i = 0;
        while (TRUE)
        {
                if (errorMsgs[i].szMsg[0] == 0)
                {
                        strcpy( szTmp, "Unknown error
number." );
                        break;
                }
                if (m_Error == errorMsgs[i].iError)
                {
                        strcpy( szTmp, errorMsgs[i].szMsg );
                        break;
                }
                i++;
        }

        if (m_szTextDetail)
                strcat( szTmp, m_szTextDetail );
        if (m_SystemErr)
                wsprintf( szTmp+strlen(szTmp), "  Error=%d",
m_SystemErr );

        m_szErrorText = new char[strlen(szTmp)+1];
        strcpy( m_szErrorText, szTmp );
        return m_szErrorText;
}
```

```
CTPCC_Common::CTPCC_Common()
{
	m_pTxn = NULL;
	m_bCanBePooled = TRUE;
}

CTPCC_Common::~CTPCC_Common()
{
	if (m_pTxn)
		delete m_pTxn;
}

HRESULT CTPCC_Common::CallSetComplete()
{
	IObjectContext* pObjectContext = NULL;

	// get our object context
	HRESULT hr = CoGetObjectContext( IID_IObjectContext,
(void **)&pObjectContext );
	pObjectContext->SetComplete();
	ReleaseInterface(pObjectContext);
	return hr;
}

//
//	called by the ctor activator
//
STDMETHODIMP CTPCC_Common::Construct(IDispatch * pUnk)
{
	// Code to access construction string, if needed later...
	//	if (!pUnk)
	//		return E_UNEXPECTED;
	//	IObjectConstructString * pString = NULL;
	//	HRESULT hr =
pUnk->QueryInterface(IID_IObjectConstructString, (void
**)&pString);
	//	pString->Release();
	try
	{
		if (Reg.eDB_Protocol == ODBC)
			m_pTxn = pCTPCC_ODBC_new(
Reg.szDbServer, Reg.szDbUser, Reg.szDbPassword,
szMyComputerName, Reg.szDbName );
		else if (Reg.eDB_Protocol == DBLIB)
			m_pTxn = pCTPCC_DBLIB_new(
Reg.szDbServer, Reg.szDbUser, Reg.szDbPassword,
szMyComputerName, Reg.szDbName );

	}
	catch (CBaseErr *e)
	{
		WriteMessageToEventLog(e->ErrorText());
		delete e;
		return E_FAIL;
	}
	catch (...)
	{
		WriteMessageToEventLog(TEXT("Unhandled
exception in object ::Construct"));
		return E_FAIL;
	}

	return S_OK;
}

HRESULT CTPCC_Common::NewOrder(VARIANT txn_in,
VARIANT* txn_out)
{
	PNEW_ORDER_DATA		pNewOrder;
	COM_DATA		*pData;
	try
	{
		pData = (COM_DATA*)txn_in.parray->pvData;
		pNewOrder = m_pTxn->BuffAddr_NewOrder();

		memcpy(pNewOrder, &pData->u.NewOrder,
sizeof(NEW_ORDER_DATA));

		VariantInit(txn_out);
		txn_out->vt = VT_SAFEARRAY;
		txn_out->parray = SafeArrayCreateVector(

VT_UI1,

txn_in.parray->rgsabound->cElements,

txn_in.parray->rgsabound->cElements);
		pData = (COM_DATA*)
txn_out->parray->pvData;

		m_pTxn->NewOrder(TRUE);

		memcpy( &pData->u.NewOrder, pNewOrder,
sizeof(NEW_ORDER_DATA));

		pData->retval = ERR_SUCCESS;
		pData->error = 0;
		return S_OK;
	}
	catch (CBaseErr *e)
	{
		// check for lost database connection; if yes,
component is toast
		if ( ((e->ErrorType() == ERR_TYPE_DBLIB)
&& (e->ErrorNum() == 10005)) ||
				((e->ErrorType() ==
ERR_TYPE_ODBC) && (e->ErrorNum() == 10054)) )
			m_bCanBePooled = FALSE;

		pData->retval = e->ErrorType();
		pData->error = e->ErrorNum();
		delete e;
		return E_FAIL;
	}
	catch (...)
	{
		WriteMessageToEventLog(TEXT("Unhandled
exception."));
		pData->retval = ERR_TYPE_LOGIC;
		pData->error = 0;
		m_bCanBePooled = FALSE;
		return E_FAIL;
	}
}

HRESULT CTPCC_Common::Payment(VARIANT txn_in,
VARIANT* txn_out)
{
	PPAYMENT_DATA pPayment;
	COM_DATA		*pData;
	try
	{
		pData = (COM_DATA*)txn_in.parray->pvData;
```

```
                pPayment = m_pTxn->BuffAddr_Payment();

                memcpy(pPayment, &pData->u.Payment,
sizeof(PAYMENT_DATA));

                VariantInit(txn_out);
                txn_out->vt = VT_SAFEARRAY;
                txn_out->parray = SafeArrayCreateVector(

VT_UI1,

txn_in.parray->rgsabound->cElements,

txn_in.parray->rgsabound->cElements);
                pData = (COM_DATA*)
txn_out->parray->pvData;

                m_pTxn->Payment(TRUE);

                memcpy( &pData->u.Payment, pPayment,
sizeof(PAYMENT_DATA));

                pData->retval = ERR_SUCCESS;
                pData->error = 0;
                return S_OK;
        }
        catch (CBaseErr *e)
        {
                // check for lost database connection; if yes,
component is toast
                if ( ((e->ErrorType() == ERR_TYPE_DBLIB)
&& (e->ErrorNum() == 10005)) ||
                                ((e->ErrorType() ==
ERR_TYPE_ODBC) && (e->ErrorNum() == 10054)) )
                        m_bCanBePooled = FALSE;

                pData->retval = e->ErrorType();
                pData->error = e->ErrorNum();
                delete e;
                return E_FAIL;
        }
        catch (...)
        {
                WriteMessageToEventLog(TEXT("Unhandled
exception."));
                pData->retval = ERR_TYPE_LOGIC;
                pData->error = 0;
                m_bCanBePooled = FALSE;
                return E_FAIL;
        }
}

HRESULT CTPCC_Common::StockLevel(VARIANT txn_in,
VARIANT* txn_out)
{
        PSTOCK_LEVEL_DATA       pStockLevel;
        COM_DATA                        *pData;

        try
        {
                pData = (COM_DATA*)txn_in.parray->pvData;
                pStockLevel =
m_pTxn->BuffAddr_StockLevel();

                memcpy(pStockLevel, &pData->u.StockLevel,
sizeof(STOCK_LEVEL_DATA));

                VariantInit(txn_out);
                txn_out->vt = VT_SAFEARRAY;
                txn_out->parray = SafeArrayCreateVector(

VT_UI1,

txn_in.parray->rgsabound->cElements,

txn_in.parray->rgsabound->cElements);
                pData =
(COM_DATA*)txn_out->parray->pvData;

                m_pTxn->StockLevel();

                memcpy( &pData->u.StockLevel, pStockLevel,
sizeof(STOCK_LEVEL_DATA));

                pData->retval = ERR_SUCCESS;
                pData->error = 0;
                return S_OK;
        }
        catch (CBaseErr *e)
        {
                // check for lost database connection; if yes,
component is toast
                if ( ((e->ErrorType() == ERR_TYPE_DBLIB)
&& (e->ErrorNum() == 10005)) ||
                                ((e->ErrorType() ==
ERR_TYPE_ODBC) && (e->ErrorNum() == 10054)) )
                        m_bCanBePooled = FALSE;

                pData->retval = e->ErrorType();
                pData->error = e->ErrorNum();
                delete e;
                return E_FAIL;
        }
        catch (...)
        {
                WriteMessageToEventLog(TEXT("Unhandled
exception."));
                pData->retval = ERR_TYPE_LOGIC;
                pData->error = 0;
                m_bCanBePooled = FALSE;
                return E_FAIL;
        }
}

HRESULT CTPCC_Common::OrderStatus(VARIANT txn_in,
VARIANT* txn_out)
{
        PORDER_STATUS_DATA      pOrderStatus;
        COM_DATA                        *pData;
        try
        {
                pData = (COM_DATA*)txn_in.parray->pvData;
                pOrderStatus =
m_pTxn->BuffAddr_OrderStatus();

                memcpy(pOrderStatus, &pData->u.OrderStatus,
sizeof(ORDER_STATUS_DATA));

                VariantInit(txn_out);
                txn_out->vt = VT_SAFEARRAY;
                txn_out->parray = SafeArrayCreateVector(

VT_UI1,

txn_in.parray->rgsabound->cElements,
```

```
txn_in.parray->rgsabound->cElements);
                    pData =
(COM_DATA*)txn_out->parray->pvData;


                    m_pTxn->OrderStatus();

                    memcpy( &pData->u.OrderStatus, pOrderStatus,
sizeof(ORDER_STATUS_DATA));

                    pData->retval = ERR_SUCCESS;
                    pData->error = 0;
                    return S_OK;
          }
          catch (CBaseErr *e)
          {
                    // check for lost database connection; if yes,
component is toast
                    if ( ((e->ErrorType() == ERR_TYPE_DBLIB)
&& (e->ErrorNum() == 10005)) ||
                              ((e->ErrorType() ==
ERR_TYPE_ODBC) && (e->ErrorNum() == 10054)) )
                              m_bCanBePooled = FALSE;

                    pData->retval = e->ErrorType();
                    pData->error = e->ErrorNum();
                    delete e;
                    return E_FAIL;
          }
          catch (...)
          {
                    WriteMessageToEventLog(TEXT("Unhandled
exception."));
                    pData->retval = ERR_TYPE_LOGIC;
                    pData->error = 0;
                    m_bCanBePooled = FALSE;
                    return E_FAIL;
          }
}
```

tpcc_com_all.def

```
; tpcc_com_all.def : Declares the module parameters.

LIBRARY      "tpcc_com_all.dll"

EXPORTS
          DllCanUnloadNow     @1 PRIVATE
          DllGetClassObject   @2 PRIVATE
          DllRegisterServer   @3 PRIVATE
          DllUnregisterServer    @4 PRIVATE
```

tpcc_com_all.h

```
/* this ALWAYS GENERATED file contains the definitions for the
interfaces */


/* File created by MIDL compiler version 5.01.0164 */
/* at Fri Jan 19 11:14:55 2001
 */
/* Compiler settings for .\src\tpcc_com_all.idl:
    Oicf (OptLev=i2), W1, Zp8, env=Win32, ms_ext, c_ext
    error checks: allocation ref bounds_check enum stub_data
*/
//@@MIDL_FILE_HEADING( )


/* verify that the <rpcndr.h> version is high enough to compile this
file*/
#ifndef __REQUIRED_RPCNDR_H_VERSION__
#define __REQUIRED_RPCNDR_H_VERSION__ 440
#endif

#include "rpc.h"
#include "rpcndr.h"

#ifndef __tpcc_com_all_h__
#define __tpcc_com_all_h__

#ifdef __cplusplus
extern "C"{
#endif

/* Forward Declarations */

#ifndef __TPCC_FWD_DEFINED__
#define __TPCC_FWD_DEFINED__

#ifdef __cplusplus
typedef class TPCC TPCC;
#else
typedef struct TPCC TPCC;
#endif /* __cplusplus */

#endif      /* __TPCC_FWD_DEFINED__ */


#ifndef __NewOrder_FWD_DEFINED__
#define __NewOrder_FWD_DEFINED__

#ifdef __cplusplus
typedef class NewOrder NewOrder;
#else
typedef struct NewOrder NewOrder;
#endif /* __cplusplus */

#endif      /* __NewOrder_FWD_DEFINED__ */


#ifndef __OrderStatus_FWD_DEFINED__
#define __OrderStatus_FWD_DEFINED__

#ifdef __cplusplus
typedef class OrderStatus OrderStatus;
#else
typedef struct OrderStatus OrderStatus;
#endif /* __cplusplus */

#endif      /* __OrderStatus_FWD_DEFINED__ */


#ifndef __Payment_FWD_DEFINED__
#define __Payment_FWD_DEFINED__

#ifdef __cplusplus
typedef class Payment Payment;
#else
typedef struct Payment Payment;
#endif /* __cplusplus */

#endif      /* __Payment_FWD_DEFINED__ */
```

```
#ifndef __StockLevel_FWD_DEFINED__
#define __StockLevel_FWD_DEFINED__

#ifdef __cplusplus
typedef class StockLevel StockLevel;
#else
typedef struct StockLevel StockLevel;
#endif /* __cplusplus */

#endif      /* __StockLevel_FWD_DEFINED__ */


/* header files for imported files */
#include "oaidl.h"
#include "ocidl.h"
#include "tpcc_com_ps.h"

void __RPC_FAR * __RPC_USER MIDL_user_allocate(size_t);
void __RPC_USER MIDL_user_free( void __RPC_FAR * );

/* interface __MIDL_itf_tpcc_com_all_0000 */
/* [local] */




extern RPC_IF_HANDLE
__MIDL_itf_tpcc_com_all_0000_v0_0_c_ifspec;
extern RPC_IF_HANDLE
__MIDL_itf_tpcc_com_all_0000_v0_0_s_ifspec;


#ifndef __TPCCLib_LIBRARY_DEFINED__
#define __TPCCLib_LIBRARY_DEFINED__

/* library TPCCLib */
/* [helpstring][version][uuid] */


EXTERN_C const IID LIBID_TPCCLib;

EXTERN_C const CLSID CLSID_TPCC;

#ifdef __cplusplus

class
DECLSPEC_UUID("122A3128-2520-11D3-BA71-00C04FBFE08B")
TPCC;
#endif

EXTERN_C const CLSID CLSID_NewOrder;

#ifdef __cplusplus

class

DECLSPEC_UUID("975BAABF-84A7-11D2-BA47-00C04FBFE08B
")
NewOrder;
#endif

EXTERN_C const CLSID CLSID_OrderStatus;

#ifdef __cplusplus

class

DECLSPEC_UUID("266836AD-A50D-11D2-BA4E-00C04FBFE08B
")
OrderStatus;
#endif

EXTERN_C const CLSID CLSID_Payment;

#ifdef __cplusplus

class

DECLSPEC_UUID("CD02F7EF-A4FA-11D2-BA4E-00C04FBFE08B
")
Payment;
#endif

EXTERN_C const CLSID CLSID_StockLevel;

#ifdef __cplusplus

class

DECLSPEC_UUID("2668369E-A50D-11D2-BA4E-00C04FBFE08B"
)
StockLevel;
#endif
#endif /* __TPCCLib_LIBRARY_DEFINED__ */

/* Additional Prototypes for ALL interfaces */

/* end of Additional Prototypes */

#ifdef __cplusplus
}
#endif

#endif
```

tpcc_com_all.idl

```
/*          FILE:                   TPCC.IDL
 *                                          Microsoft TPC-C Kit Ver.
4.20.000
 *                                          Copyright Microsoft,
1999
 *          All Rights Reserved
 *
 *                                          not yet audited
 *
 *          PURPOSE:            IDL source for TPCC.dll.  This file is
processed by the MIDL tool to
 *                                          produce the type library
(TPCC.tlb) and marshalling code.
 *
 *  Change history:
 *                      4.20.000 - first version
 */

interface TPCC;
interface NewOrder;
interface OrderStatus;
interface Payment;
interface StockLevel;
```

```
import "oaidl.idl";
import "ocidl.idl";
import "..\tpcc_com_ps\src\tpcc_com_ps.idl";

[
        uuid(122A3117-2520-11D3-BA71-00C04FBFE08B),
        version(1.0),
        helpstring("TPC-C 1.0 Type Library")
]
library TPCCLib
{
        importlib("stdole32.tlb");
        importlib("stdole2.tlb");

        [

uuid(122A3128-2520-11D3-BA71-00C04FBFE08B),
                helpstring("All Txns Class")
        ]
        coclass TPCC
        {
                [default] interface ITPCC;
        };


        [

uuid(975BAABF-84A7-11D2-BA47-00C04FBFE08B),
                helpstring("NewOrder Class")
        ]
        coclass NewOrder
        {
                [default] interface ITPCC;
        };


        [

uuid(266836AD-A50D-11D2-BA4E-00C04FBFE08B),
                helpstring("OrderStatus Class")
        ]
        coclass OrderStatus
        {
                [default] interface ITPCC;
        };


        [

uuid(CD02F7EF-A4FA-11D2-BA4E-00C04FBFE08B),
                helpstring("Payment Class")
        ]
        coclass Payment
        {
                [default] interface ITPCC;
        };


        [

uuid(2668369E-A50D-11D2-BA4E-00C04FBFE08B),
                helpstring("StockLevel Class")
        ]
        coclass StockLevel
        {
                [default] interface ITPCC;
        };

};
```

tpcc_com_all.rc

```
//Microsoft Developer Studio generated resource script.
//
#include "resource.h"

#define APSTUDIO_READONLY_SYMBOLS
////////////////////////////////////////////////////////////////////////////
//
// Generated from the TEXTINCLUDE 2 resource.
//
#include "winres.h"

////////////////////////////////////////////////////////////////////////////
#undef APSTUDIO_READONLY_SYMBOLS

////////////////////////////////////////////////////////////////////////////
// English (U.S.) resources

#if !defined(AFX_RESOURCE_DLL) || defined(AFX_TARG_ENU)
#ifdef _WIN32
LANGUAGE LANG_ENGLISH, SUBLANG_ENGLISH_US
#pragma code_page(1252)
#endif //_WIN32

#ifdef APSTUDIO_INVOKED
////////////////////////////////////////////////////////////////////////////
//
// TEXTINCLUDE
//

1 TEXTINCLUDE DISCARDABLE
BEGIN
   "resource.h\0"
END

2 TEXTINCLUDE DISCARDABLE
BEGIN
   "#include ""winres.h""\r\n"
   "\0"
END

3 TEXTINCLUDE DISCARDABLE
BEGIN
   "1 TYPELIB ""tpcc_com_all.tlb""\r\n"
   "\0"
END

#endif    // APSTUDIO_INVOKED


#ifndef _MAC
////////////////////////////////////////////////////////////////////////////
//
// Version
//

VS_VERSION_INFO VERSIONINFO
 FILEVERSION 1,0,0,1
 PRODUCTVERSION 1,0,0,1
 FILEFLAGSMASK 0x3fL
#ifdef _DEBUG
```

```
 FILEFLAGS 0x1L
#else
 FILEFLAGS 0x0L
#endif
 FILEOS 0x4L
 FILETYPE 0x2L
 FILESUBTYPE 0x0L
BEGIN
   BLOCK "StringFileInfo"
   BEGIN
      BLOCK "040904B0"
      BEGIN
         VALUE "CompanyName", "\0"
         VALUE "FileDescription", "tpcc_com_all Module\0"
         VALUE "FileVersion", "1, 0, 0, 1\0"
         VALUE "InternalName", "TPCCNEWORDER\0"
         VALUE "LegalCopyright", "Copyright 1997\0"
         VALUE "OriginalFilename", "tpcc_com_all.DLL\0"
         VALUE "ProductName", "tpcc_com_all Module\0"
         VALUE "ProductVersion", "1, 0, 0, 1\0"
         VALUE "OLESelfRegister", "\0"
      END
   END
   BLOCK "VarFileInfo"
   BEGIN
      VALUE "Translation", 0x409, 1200
   END
END

#endif    // !_MAC


/////////////////////////////////////////////////////////////////////////////
//
// REGISTRY
//

IDR_TPCC              REGISTRY DISCARDABLE
"tpcc_com_all.rgs"
IDR_NEWORDER          REGISTRY DISCARDABLE
"tpcc_com_no.rgs"
IDR_ORDERSTATUS       REGISTRY DISCARDABLE
"tpcc_com_os.rgs"
IDR_PAYMENT           REGISTRY DISCARDABLE
"tpcc_com_pay.rgs"
IDR_STOCKLEVEL        REGISTRY DISCARDABLE
"tpcc_com_sl.rgs"

/////////////////////////////////////////////////////////////////////////////
//
// String Table
//

STRINGTABLE DISCARDABLE
BEGIN
   IDS_PROJNAME          "tpcc_com_all"
END

#endif    // English (U.S.) resources
/////////////////////////////////////////////////////////////////////////////



#ifndef APSTUDIO_INVOKED
/////////////////////////////////////////////////////////////////////////////
//
// Generated from the TEXTINCLUDE 3 resource.
//
1 TYPELIB "tpcc_com_all.tlb"

/////////////////////////////////////////////////////////////////////////////
#endif    // not APSTUDIO_INVOKED
```

tpcc_com_all.rgs

```
HKCR
{
            TPCC.AllTxns.1 = s 'All Txns Class'
            {
                        CLSID = s
'{122A3128-2520-11D3-BA71-00C04FBFE08B}'
            }
            TPCC.AllTxns = s 'TPCC Class'
            {
                        CurVer = s 'TPCC.AllTxns.1'
            }
            NoRemove CLSID
            {
                        ForceRemove
{122A3128-2520-11D3-BA71-00C04FBFE08B} = s 'TPCC Class'
                        {
                                    ProgID = s 'TPCC.AllTxns.1'
                                    VersionIndependentProgID = s
'TPCC.AllTxns'
                                    InprocServer32 = s '%MODULE%'
                                    {
                                                val ThreadingModel = s
'Both'
                                    }
                        }
            }
}
```

tpcc_com_all_i.c

```
/* this file contains the actual definitions of */
/* the IIDs and CLSIDs */

/* link this file in with the server and any clients */


/* File created by MIDL compiler version 5.01.0164 */
/* at Fri Jan 19 11:14:55 2001
 */
/* Compiler settings for .\src\tpcc_com_all.idl:
    Oicf (OptLev=i2), W1, Zp8, env=Win32, ms_ext, c_ext
    error checks: allocation ref bounds_check enum stub_data
*/
//@@MIDL_FILE_HEADING( )
#ifdef __cplusplus
extern "C"{
#endif


#ifndef __IID_DEFINED__
#define __IID_DEFINED__

typedef struct _IID
{
    unsigned long x;
    unsigned short s1;
    unsigned short s2;
    unsigned char  c[8];
```

```
} IID;

#endif // __IID_DEFINED__

#ifndef CLSID_DEFINED
#define CLSID_DEFINED
typedef IID CLSID;
#endif // CLSID_DEFINED

const IID LIBID_TPCCLib =
{0x122A3117,0x2520,0x11D3,{0xBA,0x71,0x00,0xC0,0x4F,0xBF,0xE0,0x8B}};


const CLSID CLSID_TPCC =
{0x122A3128,0x2520,0x11D3,{0xBA,0x71,0x00,0xC0,0x4F,0xBF,0xE0,0x8B}};


const CLSID CLSID_NewOrder =
{0x975BAABF,0x84A7,0x11D2,{0xBA,0x47,0x00,0xC0,0x4F,0xBF,
0xE0,0x8B}};


const CLSID CLSID_OrderStatus =
{0x266836AD,0xA50D,0x11D2,{0xBA,0x4E,0x00,0xC0,0x4F,0xBF,
0xE0,0x8B}};


const CLSID CLSID_Payment =
{0xCD02F7EF,0xA4FA,0x11D2,{0xBA,0x4E,0x00,0xC0,0x4F,0xBF,
0xE0,0x8B}};


const CLSID CLSID_StockLevel =
{0x2668369E,0xA50D,0x11D2,{0xBA,0x4E,0x00,0xC0,0x4F,0xBF,0
xE0,0x8B}};


#ifdef __cplusplus
}
#endif
```

tpcc_com_no.rgs

```
HKCR
{
        TPCC.NewOrder.1 = s 'NewOrder Class'
        {
                CLSID = s
'{975BAABF-84A7-11D2-BA47-00C04FBFE08B}'
        }
        TPCC.NewOrder = s 'NewOrder Class'
        {
                CurVer = s 'TPCC.NewOrder.1'
        }
        NoRemove CLSID
        {
                ForceRemove
{975BAABF-84A7-11D2-BA47-00C04FBFE08B} = s 'NewOrder
Class'
                {
                        ProgID = s 'TPCC.NewOrder.1'
                        VersionIndependentProgID = s
'TPCC.NewOrder'
                        InprocServer32 = s '%MODULE%'
                        {
                                val ThreadingModel = s
'Both'
                        }
                }
        }
}
```

tpcc_com_os.rgs

```
HKCR
{
        TPCC.OrderStatus.1 = s 'OrderStatus Class'
        {
                CLSID = s
'{266836AD-A50D-11D2-BA4E-00C04FBFE08B}'
        }
        TPCC.OrderStatus = s 'OrderStatus Class'
        {
                CurVer = s 'TPCC.OrderStatus.1'
        }
        NoRemove CLSID
        {
                ForceRemove
{266836AD-A50D-11D2-BA4E-00C04FBFE08B} = s 'OrderStatus
Class'
                {
                        ProgID = s 'TPCC.OrderStatus.1'
                        VersionIndependentProgID = s
'TPCC.OrderStatus'
                        InprocServer32 = s '%MODULE%'
                        {
                                val ThreadingModel = s
'Both'
                        }
                }
        }
}
```

tpcc_com_pay.rgs

```
HKCR
{
        TPCC.Payment.1 = s 'Payment Class'
        {
                CLSID = s
'{CD02F7EF-A4FA-11D2-BA4E-00C04FBFE08B}'
        }
        TPCC.Payment = s 'Payment Class'
        {
                CurVer = s 'TPCC.Payment.1'
        }
        NoRemove CLSID
        {
                ForceRemove
{CD02F7EF-A4FA-11D2-BA4E-00C04FBFE08B} = s 'Payment
Class'
                {
                        ProgID = s 'TPCC.Payment.1'
                        VersionIndependentProgID = s
'TPCC.Payment'
                        InprocServer32 = s '%MODULE%'
                        {
                                val ThreadingModel = s
'Both'
                        }
```

```
                    }
            }
}
```

tpcc_com_ps.def

```
LIBRARY     "tpcc_com_ps"

DESCRIPTION  'Proxy/Stub DLL'

EXPORTS
            DllGetClassObject      @1          PRIVATE
            DllCanUnloadNow        @2          PRIVATE
            GetProxyDllInfo        @3          PRIVATE
            DllRegisterServer                  @4          PRIVATE
            DllUnregisterServer                @5          PRIVATE
```

tpcc_com_ps.h

```
/* this ALWAYS GENERATED file contains the definitions for the
interfaces */


/* File created by MIDL compiler version 5.01.0164 */
/* at Fri Jan 19 11:14:46 2001
 */
/* Compiler settings for .\src\tpcc_com_ps.idl:
    Oicf (OptLev=i2), W1, Zp8, env=Win32, ms_ext, c_ext
    error checks: allocation ref bounds_check enum stub_data
*/
//@@MIDL_FILE_HEADING( )


/* verify that the <rpcndr.h> version is high enough to compile this
file*/
#ifndef __REQUIRED_RPCNDR_H_VERSION__
#define __REQUIRED_RPCNDR_H_VERSION__ 440
#endif

#include "rpc.h"
#include "rpcndr.h"

#ifndef __RPCNDR_H_VERSION__
#error this stub requires an updated version of <rpcndr.h>
#endif // __RPCNDR_H_VERSION__

#ifndef COM_NO_WINDOWS_H
#include "windows.h"
#include "ole2.h"
#endif /*COM_NO_WINDOWS_H*/

#ifndef __tpcc_com_ps_h__
#define __tpcc_com_ps_h__

#ifdef __cplusplus
extern "C"{
#endif

/* Forward Declarations */

#ifndef __ITPCC_FWD_DEFINED__
#define __ITPCC_FWD_DEFINED__
typedef interface ITPCC ITPCC;
#endif      /* __ITPCC_FWD_DEFINED__ */


/* header files for imported files */
#include "oaidl.h"
#include "ocidl.h"

void __RPC_FAR * __RPC_USER MIDL_user_allocate(size_t);
void __RPC_USER MIDL_user_free( void __RPC_FAR * );

/* interface __MIDL_itf_tpcc_com_ps_0000 */
/* [local] */



extern RPC_IF_HANDLE
__MIDL_itf_tpcc_com_ps_0000_v0_0_c_ifspec;
extern RPC_IF_HANDLE
__MIDL_itf_tpcc_com_ps_0000_v0_0_s_ifspec;

#ifndef __ITPCC_INTERFACE_DEFINED__
#define __ITPCC_INTERFACE_DEFINED__

/* interface ITPCC */
/* [unique][helpstring][uuid][oleautomation][object]  */


EXTERN_C const IID IID_ITPCC;

#if defined(__cplusplus) && !defined(CINTERFACE)



MIDL_INTERFACE("FEEE6AA2-84B1-11d2-BA47-00C04FBFE08B
")
    ITPCC : public IUnknown
    {
    public:
        virtual HRESULT __stdcall NewOrder(
            /* [in] */ VARIANT txn_in,
            /* [out] */ VARIANT __RPC_FAR *txn_out) = 0;

        virtual HRESULT __stdcall Payment(
            /* [in] */ VARIANT txn_in,
            /* [out] */ VARIANT __RPC_FAR *txn_out) = 0;

        virtual HRESULT __stdcall Delivery(
            /* [in] */ VARIANT txn_in) = 0;

        virtual HRESULT __stdcall StockLevel(
            /* [in] */ VARIANT txn_in,
            /* [out] */ VARIANT __RPC_FAR *txn_out) = 0;

        virtual HRESULT __stdcall OrderStatus(
            /* [in] */ VARIANT txn_in,
            /* [out] */ VARIANT __RPC_FAR *txn_out) = 0;

        virtual HRESULT __stdcall CallSetComplete( void) = 0;

    };

#else       /* C style interface */

    typedef struct ITPCCVtbl
    {
        BEGIN_INTERFACE

        HRESULT ( STDMETHODCALLTYPE __RPC_FAR
*QueryInterface )(
```

```
        ITPCC __RPC_FAR * This,
        /* [in] */ REFIID riid,
        /* [iid_is][out] */ void __RPC_FAR *__RPC_FAR
*ppvObject);

      ULONG ( STDMETHODCALLTYPE __RPC_FAR *AddRef )(
        ITPCC __RPC_FAR * This);

      ULONG ( STDMETHODCALLTYPE __RPC_FAR *Release )(
        ITPCC __RPC_FAR * This);

      HRESULT ( __stdcall __RPC_FAR *NewOrder )(
        ITPCC __RPC_FAR * This,
        /* [in] */ VARIANT txn_in,
        /* [out] */ VARIANT __RPC_FAR *txn_out);

      HRESULT ( __stdcall __RPC_FAR *Payment )(
        ITPCC __RPC_FAR * This,
        /* [in] */ VARIANT txn_in,
        /* [out] */ VARIANT __RPC_FAR *txn_out);

      HRESULT ( __stdcall __RPC_FAR *Delivery )(
        ITPCC __RPC_FAR * This,
        /* [in] */ VARIANT txn_in);

      HRESULT ( __stdcall __RPC_FAR *StockLevel )(
        ITPCC __RPC_FAR * This,
        /* [in] */ VARIANT txn_in,
        /* [out] */ VARIANT __RPC_FAR *txn_out);

      HRESULT ( __stdcall __RPC_FAR *OrderStatus )(
        ITPCC __RPC_FAR * This,
        /* [in] */ VARIANT txn_in,
        /* [out] */ VARIANT __RPC_FAR *txn_out);

      HRESULT ( __stdcall __RPC_FAR *CallSetComplete )(
        ITPCC __RPC_FAR * This);

      END_INTERFACE
    } ITPCCVtbl;

    interface ITPCC
    {
      CONST_VTBL struct ITPCCVtbl __RPC_FAR *lpVtbl;
    };



#ifdef COBJMACROS


#define ITPCC_QueryInterface(This,riid,ppvObject)    \
    (This)->lpVtbl -> QueryInterface(This,riid,ppvObject)

#define ITPCC_AddRef(This)    \
    (This)->lpVtbl -> AddRef(This)

#define ITPCC_Release(This)    \
    (This)->lpVtbl -> Release(This)


#define ITPCC_NewOrder(This,txn_in,txn_out)          \
    (This)->lpVtbl -> NewOrder(This,txn_in,txn_out)

#define ITPCC_Payment(This,txn_in,txn_out)           \
    (This)->lpVtbl -> Payment(This,txn_in,txn_out)

#define ITPCC_Delivery(This,txn_in)        \
    (This)->lpVtbl -> Delivery(This,txn_in)

#define ITPCC_StockLevel(This,txn_in,txn_out)        \
    (This)->lpVtbl -> StockLevel(This,txn_in,txn_out)

#define ITPCC_OrderStatus(This,txn_in,txn_out)       \
    (This)->lpVtbl -> OrderStatus(This,txn_in,txn_out)

#define ITPCC_CallSetComplete(This)      \
    (This)->lpVtbl -> CallSetComplete(This)

#endif /* COBJMACROS */


#endif      /* C style interface */



HRESULT __stdcall ITPCC_NewOrder_Proxy(
    ITPCC __RPC_FAR * This,
    /* [in] */ VARIANT txn_in,
    /* [out] */ VARIANT __RPC_FAR *txn_out);


void __RPC_STUB ITPCC_NewOrder_Stub(
    IRpcStubBuffer *This,
    IRpcChannelBuffer *_pRpcChannelBuffer,
    PRPC_MESSAGE _pRpcMessage,
    DWORD *_pdwStubPhase);


HRESULT __stdcall ITPCC_Payment_Proxy(
    ITPCC __RPC_FAR * This,
    /* [in] */ VARIANT txn_in,
    /* [out] */ VARIANT __RPC_FAR *txn_out);


void __RPC_STUB ITPCC_Payment_Stub(
    IRpcStubBuffer *This,
    IRpcChannelBuffer *_pRpcChannelBuffer,
    PRPC_MESSAGE _pRpcMessage,
    DWORD *_pdwStubPhase);


HRESULT __stdcall ITPCC_Delivery_Proxy(
    ITPCC __RPC_FAR * This,
    /* [in] */ VARIANT txn_in);


void __RPC_STUB ITPCC_Delivery_Stub(
    IRpcStubBuffer *This,
    IRpcChannelBuffer *_pRpcChannelBuffer,
    PRPC_MESSAGE _pRpcMessage,
    DWORD *_pdwStubPhase);


HRESULT __stdcall ITPCC_StockLevel_Proxy(
    ITPCC __RPC_FAR * This,
    /* [in] */ VARIANT txn_in,
    /* [out] */ VARIANT __RPC_FAR *txn_out);


void __RPC_STUB ITPCC_StockLevel_Stub(
    IRpcStubBuffer *This,
    IRpcChannelBuffer *_pRpcChannelBuffer,
    PRPC_MESSAGE _pRpcMessage,
    DWORD *_pdwStubPhase);
```

```
HRESULT __stdcall ITPCC_OrderStatus_Proxy(
    ITPCC __RPC_FAR * This,
    /* [in] */ VARIANT txn_in,
    /* [out] */ VARIANT __RPC_FAR *txn_out);


void __RPC_STUB ITPCC_OrderStatus_Stub(
    IRpcStubBuffer *This,
    IRpcChannelBuffer *_pRpcChannelBuffer,
    PRPC_MESSAGE _pRpcMessage,
    DWORD *_pdwStubPhase);


HRESULT __stdcall ITPCC_CallSetComplete_Proxy(
    ITPCC __RPC_FAR * This);


void __RPC_STUB ITPCC_CallSetComplete_Stub(
    IRpcStubBuffer *This,
    IRpcChannelBuffer *_pRpcChannelBuffer,
    PRPC_MESSAGE _pRpcMessage,
    DWORD *_pdwStubPhase);



#endif      /* __ITPCC_INTERFACE_DEFINED__ */


/* Additional Prototypes for ALL interfaces */

unsigned long             __RPC_USER  VARIANT_UserSize(
unsigned long __RPC_FAR *, unsigned long            , VARIANT
__RPC_FAR * );
unsigned char __RPC_FAR * __RPC_USER
VARIANT_UserMarshal(  unsigned long __RPC_FAR *, unsigned
char __RPC_FAR *, VARIANT __RPC_FAR * );
unsigned char __RPC_FAR * __RPC_USER
VARIANT_UserUnmarshal(unsigned long __RPC_FAR *, unsigned
char __RPC_FAR *, VARIANT __RPC_FAR * );
void                  __RPC_USER  VARIANT_UserFree(    unsigned
long __RPC_FAR *, VARIANT __RPC_FAR * );

/* end of Additional Prototypes */

#ifdef __cplusplus
}
#endif

#endif
```

tpcc_com_ps.idl

```
/*          FILE:                   ITPCC.IDL
 *                                          Microsoft TPC-C Kit Ver.
4.20.000
 *                                          Copyright Microsoft,
1999
 *          All Rights Reserved
 *
 *                                          not yet audited
 *
 *          PURPOSE:                Defines the interface used by TPCC.
This interface can be implemented by C++ components.
 *
 *  Change history:
 *                          4.20.000 - first version
 */

// Forward declare all types defined
interface ITPCC;
import "oaidl.idl";
import "ocidl.idl";

            [
                        object,
                        oleautomation,

uuid(FEEE6AA2-84B1-11d2-BA47-00C04FBFE08B),
                        helpstring("ITPCC Interface"),
                        pointer_default(unique)
            ]
            interface ITPCC : IUnknown
            {

      HRESULT _stdcall NewOrder
                                                                    (
                                                                    [in]
VARIANT  txn_in,

[out] VARIANT *txn_out
                                                                    );

      HRESULT _stdcall Payment
                                                                    (
                                                                    [in]
VARIANT txn_in,

[out] VARIANT *txn_out
                                                                    );

      HRESULT _stdcall Delivery
                                                                    (
                                                                    [in]
VARIANT txn_in
                                                                    );

      HRESULT _stdcall StockLevel
                                                                    (
                                                                    [in]
VARIANT txn_in,

[out] VARIANT *txn_out
                                                                    );

      HRESULT _stdcall OrderStatus
                                                                    (
                                                                    [in]
VARIANT txn_in,

[out] VARIANT *txn_out
                                                                    );

      HRESULT _stdcall CallSetComplete
                                                                    (
                                                                    );

   };       // interface ITPCC
```

tpcc_com_ps_i.c

```
/* this file contains the actual definitions of */
```

```
/* the IIDs and CLSIDs */

/* link this file in with the server and any clients */


/* File created by MIDL compiler version 5.01.0164 */
/* at Fri Jan 19 11:14:46 2001
 */
/* Compiler settings for .\src\tpcc_com_ps.idl:
    Oicf (OptLev=i2), W1, Zp8, env=Win32, ms_ext, c_ext
    error checks: allocation ref bounds_check enum stub_data
*/
//@@MIDL_FILE_HEADING( )
#ifdef __cplusplus
extern "C"{
#endif


#ifndef __IID_DEFINED__
#define __IID_DEFINED__

typedef struct _IID
{
    unsigned long x;
    unsigned short s1;
    unsigned short s2;
    unsigned char  c[8];
} IID;

#endif // __IID_DEFINED__

#ifndef CLSID_DEFINED
#define CLSID_DEFINED
typedef IID CLSID;
#endif // CLSID_DEFINED

const IID IID_ITPCC =
{0xFEEE6AA2,0x84B1,0x11d2,{0xBA,0x47,0x00,0xC0,0x4F,0xBF,0
xE0,0x8B}};


#ifdef __cplusplus
}
#endif
```

tpcc_com_ps_p.c

```
/* this ALWAYS GENERATED file contains the proxy stub code */


/* File created by MIDL compiler version 5.01.0164 */
/* at Fri Jan 19 11:14:46 2001
 */
/* Compiler settings for .\src\tpcc_com_ps.idl:
    Oicf (OptLev=i2), W1, Zp8, env=Win32, ms_ext, c_ext
    error checks: allocation ref bounds_check enum stub_data
*/
//@@MIDL_FILE_HEADING( )

#define USE_STUBLESS_PROXY


/* verify that the <rpcproxy.h> version is high enough to compile this
file*/
#ifndef __REDQ_RPCPROXY_H_VERSION__
#define __REQUIRED_RPCPROXY_H_VERSION__ 440
#endif


#include "rpcproxy.h"
#ifndef __RPCPROXY_H_VERSION__
#error this stub requires an updated version of <rpcproxy.h>
#endif // __RPCPROXY_H_VERSION__


#include "tpcc_com_ps.h"

#define TYPE_FORMAT_STRING_SIZE  997
#define PROC_FORMAT_STRING_SIZE  187

typedef struct _MIDL_TYPE_FORMAT_STRING
    {
    short          Pad;
    unsigned char  Format[ TYPE_FORMAT_STRING_SIZE ];
    } MIDL_TYPE_FORMAT_STRING;

typedef struct _MIDL_PROC_FORMAT_STRING
    {
    short          Pad;
    unsigned char  Format[ PROC_FORMAT_STRING_SIZE ];
    } MIDL_PROC_FORMAT_STRING;


extern const MIDL_TYPE_FORMAT_STRING
__MIDL_TypeFormatString;
extern const MIDL_PROC_FORMAT_STRING
__MIDL_ProcFormatString;


/* Standard interface: __MIDL_itf_tpcc_com_ps_0000, ver. 0.0,

GUID={0x00000000,0x0000,0x0000,{0x00,0x00,0x00,0x00,0x00,0x
00,0x00,0x00}} */


/* Object interface: IUnknown, ver. 0.0,

GUID={0x00000000,0x0000,0x0000,{0xC0,0x00,0x00,0x00,0x00,0x
00,0x00,0x46}} */


/* Object interface: ITPCC, ver. 0.0,

GUID={0xFEEE6AA2,0x84B1,0x11d2,{0xBA,0x47,0x00,0xC0,0x4F,
0xBF,0xE0,0x8B}} */


extern const MIDL_STUB_DESC Object_StubDesc;


extern const MIDL_SERVER_INFO ITPCC_ServerInfo;

#pragma code_seg(".orpc")
extern const USER_MARSHAL_ROUTINE_QUADRUPLE
UserMarshalRoutines[1];

static const MIDL_STUB_DESC Object_StubDesc =
    {
    0,
    NdrOleAllocate,
    NdrOleFree,
    0,
    0,
    0,
```

```
    0,
    0,
    __MIDL_TypeFormatString.Format,
    1, /* -error bounds_check flag */
    0x20000, /* Ndr library version */
    0,
    0x50100a4, /* MIDL Version 5.1.164 */
    0,
    UserMarshalRoutines,
    0,  /* notify & notify_flag routine table */
    1,  /* Flags */
    0,  /* Reserved3 */
    0,  /* Reserved4 */
    0   /* Reserved5 */
    };

static const unsigned short ITPCC_FormatStringOffsetTable[] =
    {
    0,
    34,
    68,
    96,
    130,
    164
    };

static const MIDL_SERVER_INFO ITPCC_ServerInfo =
    {
    &Object_StubDesc,
    0,
    __MIDL_ProcFormatString.Format,
    &ITPCC_FormatStringOffsetTable[-3],
    0,
    0,
    0,
    0
    };

static const MIDL_STUBLESS_PROXY_INFO ITPCC_ProxyInfo =
    {
    &Object_StubDesc,
    __MIDL_ProcFormatString.Format,
    &ITPCC_FormatStringOffsetTable[-3],
    0,
    0,
    0
    };

CINTERFACE_PROXY_VTABLE(9) _ITPCCProxyVtbl =
{
    &ITPCC_ProxyInfo,
    &IID_ITPCC,
    IUnknown_QueryInterface_Proxy,
    IUnknown_AddRef_Proxy,
    IUnknown_Release_Proxy ,
    (void *)-1 /* ITPCC::NewOrder */ ,
    (void *)-1 /* ITPCC::Payment */ ,
    (void *)-1 /* ITPCC::Delivery */ ,
    (void *)-1 /* ITPCC::StockLevel */ ,
    (void *)-1 /* ITPCC::OrderStatus */ ,
    (void *)-1 /* ITPCC::CallSetComplete */
};

const CInterfaceStubVtbl _ITPCCStubVtbl =
{
    &IID_ITPCC,
    &ITPCC_ServerInfo,
    9,
    0, /* pure interpreted */
    CStdStubBuffer_METHODS
};

#pragma data_seg(".rdata")

static const USER_MARSHAL_ROUTINE_QUADRUPLE
UserMarshalRoutines[1] =
        {

            {
            VARIANT_UserSize
            ,VARIANT_UserMarshal
            ,VARIANT_UserUnmarshal
            ,VARIANT_UserFree
            }

        };


#if !defined(__RPC_WIN32__)
#error  Invalid build platform for this stub.
#endif

#if !(TARGET_IS_NT40_OR_LATER)
#error You need a Windows NT 4.0 or later to run this stub because it
uses these features:
#error   -Oif or -Oicf, [wire_marshal] or [user_marshal] attribute, more
than 32 methods in the interface.
#error However, your C/C++ compilation flags indicate you intend to
run this app on earlier systems.
#error This app will die there with the
RPC_X_WRONG_STUB_VERSION error.
#endif


static const MIDL_PROC_FORMAT_STRING
__MIDL_ProcFormatString =
    {
        0,
        {

                /* Procedure NewOrder */

                                        0x33,               /*
FC_AUTO_HANDLE */
                                        0x6c,               /* Old Flags:
object, Oi2 */
/*  2 */        NdrFcLong( 0x0 ),   /* 0 */
/*  6 */        NdrFcShort( 0x3 ),  /* 3 */
#ifndef _ALPHA_
#if !defined(_MIPS_) && !defined(_PPC_)
/*  8 */        NdrFcShort( 0x1c ),   /* x86 Stack size/offset = 28 */
#else
                                        NdrFcShort( 0x20 ),   /* MIPS &
PPC Stack size/offset = 32 */
#endif
#else
                                        NdrFcShort( 0x28 ),   /* Alpha Stack
size/offset = 40 */
#endif
/* 10 */        NdrFcShort( 0x0 ),  /* 0 */
/* 12 */        NdrFcShort( 0x8 ),  /* 8 */
/* 14 */        0x7,                /* Oi2 Flags:  srv must size, clt must
size, has return, */
                                        0x3,                /* 3 */

                /* Parameter txn_in */
```

```
/* 16 */    NdrFcShort( 0x8b ),   /* Flags:  must size, must free, in, by
val, */
#ifndef _ALPHA_
#if !defined(_MIPS_) && !defined(_PPC_)
/* 18 */    NdrFcShort( 0x4 ),    /* x86 Stack size/offset = 4 */
#else
                                  NdrFcShort( 0x8 ),    /* MIPS &
PPC Stack size/offset = 8 */
#endif
#else
                                  NdrFcShort( 0x8 ),    /* Alpha Stack
size/offset = 8 */
#endif
/* 20 */    NdrFcShort( 0x3c8 ), /* Type Offset=968 */

            /* Parameter txn_out */

/* 22 */    NdrFcShort( 0x4113 ),             /* Flags:  must size, must
free, out, simple ref, srv alloc size=16 */
#ifndef _ALPHA_
#if !defined(_MIPS_) && !defined(_PPC_)
/* 24 */    NdrFcShort( 0x14 ),   /* x86 Stack size/offset = 20 */
#else
                                  NdrFcShort( 0x18 ),   /* MIPS &
PPC Stack size/offset = 24 */
#endif
#else
                                  NdrFcShort( 0x18 ),   /* Alpha Stack
size/offset = 24 */
#endif
/* 26 */    NdrFcShort( 0x3da ), /* Type Offset=986 */

            /* Return value */

/* 28 */    NdrFcShort( 0x70 ),   /* Flags:  out, return, base type, */
#ifndef _ALPHA_
#if !defined(_MIPS_) && !defined(_PPC_)
/* 30 */    NdrFcShort( 0x18 ),   /* x86 Stack size/offset = 24 */
#else
                                  NdrFcShort( 0x1c ),   /* MIPS &
PPC Stack size/offset = 28 */
#endif
#else
                                  NdrFcShort( 0x20 ),   /* Alpha Stack
size/offset = 32 */
#endif
/* 32 */    0x8,                  /* FC_LONG */
                                  0x0,                  /* 0 */

            /* Procedure Payment */

/* 34 */    0x33,                 /* FC_AUTO_HANDLE */
                                  0x6c,                 /* Old Flags:
object, Oi2 */
/* 36 */    NdrFcLong( 0x0 ),     /* 0 */
/* 40 */    NdrFcShort( 0x4 ),    /* 4 */
#ifndef _ALPHA_
#if !defined(_MIPS_) && !defined(_PPC_)
/* 42 */    NdrFcShort( 0x1c ),   /* x86 Stack size/offset = 28 */
#else
                                  NdrFcShort( 0x20 ),   /* MIPS &
PPC Stack size/offset = 32 */
#endif
#else
                                  NdrFcShort( 0x28 ),   /* Alpha Stack
size/offset = 40 */
#endif
/* 44 */    NdrFcShort( 0x0 ),    /* 0 */
/* 46 */    NdrFcShort( 0x8 ),    /* 8 */
/* 48 */    0x7,                  /* Oi2 Flags:  srv must size, clt must
size, has return, */
                                  0x3,                  /* 3 */

            /* Parameter txn_in */

/* 50 */    NdrFcShort( 0x8b ),   /* Flags:  must size, must free, in, by
val, */
#ifndef _ALPHA_
#if !defined(_MIPS_) && !defined(_PPC_)
/* 52 */    NdrFcShort( 0x4 ),    /* x86 Stack size/offset = 4 */
#else
                                  NdrFcShort( 0x8 ),    /* MIPS &
PPC Stack size/offset = 8 */
#endif
#else
                                  NdrFcShort( 0x8 ),    /* Alpha Stack
size/offset = 8 */
#endif
/* 54 */    NdrFcShort( 0x3c8 ), /* Type Offset=968 */

            /* Parameter txn_out */

/* 56 */    NdrFcShort( 0x4113 ),             /* Flags:  must size, must
free, out, simple ref, srv alloc size=16 */
#ifndef _ALPHA_
#if !defined(_MIPS_) && !defined(_PPC_)
/* 58 */    NdrFcShort( 0x14 ),   /* x86 Stack size/offset = 20 */
#else
                                  NdrFcShort( 0x18 ),   /* MIPS &
PPC Stack size/offset = 24 */
#endif
#else
                                  NdrFcShort( 0x18 ),   /* Alpha Stack
size/offset = 24 */
#endif
/* 60 */    NdrFcShort( 0x3da ), /* Type Offset=986 */

            /* Return value */

/* 62 */    NdrFcShort( 0x70 ),   /* Flags:  out, return, base type, */
#ifndef _ALPHA_
#if !defined(_MIPS_) && !defined(_PPC_)
/* 64 */    NdrFcShort( 0x18 ),   /* x86 Stack size/offset = 24 */
#else
                                  NdrFcShort( 0x1c ),   /* MIPS &
PPC Stack size/offset = 28 */
#endif
#else
                                  NdrFcShort( 0x20 ),   /* Alpha Stack
size/offset = 32 */
#endif
/* 66 */    0x8,                  /* FC_LONG */
                                  0x0,                  /* 0 */

            /* Procedure Delivery */

/* 68 */    0x33,                 /* FC_AUTO_HANDLE */
                                  0x6c,                 /* Old Flags:
object, Oi2 */
/* 70 */    NdrFcLong( 0x0 ),     /* 0 */
/* 74 */    NdrFcShort( 0x5 ),    /* 5 */
#ifndef _ALPHA_
#if !defined(_MIPS_) && !defined(_PPC_)
/* 76 */    NdrFcShort( 0x18 ),   /* x86 Stack size/offset = 24 */
#else
```

```
                                NdrFcShort( 0x1c ),   /* MIPS &
PPC Stack size/offset = 28 */
#endif
#else
                                NdrFcShort( 0x20 ),   /* Alpha Stack
size/offset = 32 */
#endif
/* 78 */    NdrFcShort( 0x0 ),    /* 0 */
/* 80 */    NdrFcShort( 0x8 ),    /* 8 */
/* 82 */    0x6,                  /* Oi2 Flags:  clt must size, has
return, */
                                0x2,                  /* 2 */

            /* Parameter txn_in */

/* 84 */    NdrFcShort( 0x8b ),   /* Flags:  must size, must free, in, by
val, */
#ifndef _ALPHA_
#if !defined(_MIPS_) && !defined(_PPC_)
/* 86 */    NdrFcShort( 0x4 ),    /* x86 Stack size/offset = 4 */
#else
                                NdrFcShort( 0x8 ),    /* MIPS &
PPC Stack size/offset = 8 */
#endif
#else
                                NdrFcShort( 0x8 ),    /* Alpha Stack
size/offset = 8 */
#endif
/* 88 */    NdrFcShort( 0x3c8 ), /* Type Offset=968 */

            /* Return value */

/* 90 */    NdrFcShort( 0x70 ),   /* Flags:  out, return, base type, */
#ifndef _ALPHA_
#if !defined(_MIPS_) && !defined(_PPC_)
/* 92 */    NdrFcShort( 0x14 ),   /* x86 Stack size/offset = 20 */
#else
                                NdrFcShort( 0x18 ),   /* MIPS &
PPC Stack size/offset = 24 */
#endif
#else
                                NdrFcShort( 0x18 ),   /* Alpha Stack
size/offset = 24 */
#endif
/* 94 */    0x8,                  /* FC_LONG */
                                0x0,                  /* 0 */

            /* Procedure StockLevel */

/* 96 */    0x33,                 /* FC_AUTO_HANDLE */
                                0x6c,                 /* Old Flags:
object, Oi2 */
/* 98 */    NdrFcLong( 0x0 ),     /* 0 */
/* 102 */   NdrFcShort( 0x6 ),    /* 6 */
#ifndef _ALPHA_
#if !defined(_MIPS_) && !defined(_PPC_)
/* 104 */   NdrFcShort( 0x1c ),   /* x86 Stack size/offset = 28 */
#else
                                NdrFcShort( 0x20 ),   /* MIPS &
PPC Stack size/offset = 32 */
#endif
#else
                                NdrFcShort( 0x28 ),   /* Alpha Stack
size/offset = 40 */
#endif
/* 106 */   NdrFcShort( 0x0 ),    /* 0 */
/* 108 */   NdrFcShort( 0x8 ),    /* 8 */
/* 110 */   0x7,                  /* Oi2 Flags:  srv must size, clt must
size, has return, */
                                0x3,                  /* 3 */

            /* Parameter txn_in */

/* 112 */   NdrFcShort( 0x8b ),   /* Flags:  must size, must free, in, by
val, */
#ifndef _ALPHA_
#if !defined(_MIPS_) && !defined(_PPC_)
/* 114 */   NdrFcShort( 0x4 ),    /* x86 Stack size/offset = 4 */
#else
                                NdrFcShort( 0x8 ),    /* MIPS &
PPC Stack size/offset = 8 */
#endif
#else
                                NdrFcShort( 0x8 ),    /* Alpha Stack
size/offset = 8 */
#endif
/* 116 */   NdrFcShort( 0x3c8 ), /* Type Offset=968 */

            /* Parameter txn_out */

/* 118 */   NdrFcShort( 0x4113 ),             /* Flags:  must size, must
free, out, simple ref, srv alloc size=16 */
#ifndef _ALPHA_
#if !defined(_MIPS_) && !defined(_PPC_)
/* 120 */   NdrFcShort( 0x14 ),   /* x86 Stack size/offset = 20 */
#else
                                NdrFcShort( 0x18 ),   /* MIPS &
PPC Stack size/offset = 24 */
#endif
#else
                                NdrFcShort( 0x18 ),   /* Alpha Stack
size/offset = 24 */
#endif
/* 122 */   NdrFcShort( 0x3da ), /* Type Offset=986 */

            /* Return value */

/* 124 */   NdrFcShort( 0x70 ),   /* Flags:  out, return, base type, */
#ifndef _ALPHA_
#if !defined(_MIPS_) && !defined(_PPC_)
/* 126 */   NdrFcShort( 0x18 ),   /* x86 Stack size/offset = 24 */
#else
                                NdrFcShort( 0x1c ),   /* MIPS &
PPC Stack size/offset = 28 */
#endif
#else
                                NdrFcShort( 0x20 ),   /* Alpha Stack
size/offset = 32 */
#endif
/* 128 */   0x8,                  /* FC_LONG */
                                0x0,                  /* 0 */

            /* Procedure OrderStatus */

/* 130 */   0x33,                 /* FC_AUTO_HANDLE */
                                0x6c,                 /* Old Flags:
object, Oi2 */
/* 132 */   NdrFcLong( 0x0 ),     /* 0 */
/* 136 */   NdrFcShort( 0x7 ),    /* 7 */
#ifndef _ALPHA_
#if !defined(_MIPS_) && !defined(_PPC_)
/* 138 */   NdrFcShort( 0x1c ),   /* x86 Stack size/offset = 28 */
#else
                                NdrFcShort( 0x20 ),   /* MIPS &
PPC Stack size/offset = 32 */
```

```
#endif
#else
                                NdrFcShort( 0x28 ),   /* Alpha Stack
size/offset = 40 */
#endif
/* 140 */   NdrFcShort( 0x0 ),    /* 0 */
/* 142 */   NdrFcShort( 0x8 ),    /* 8 */
/* 144 */   0x7,                  /* Oi2 Flags:  srv must size, clt must
size, has return, */
                                0x3,                  /* 3 */

            /* Parameter txn_in */

/* 146 */   NdrFcShort( 0x8b ),   /* Flags:  must size, must free, in, by
val, */
#ifndef _ALPHA_
#if !defined(_MIPS_) && !defined(_PPC_)
/* 148 */   NdrFcShort( 0x4 ),    /* x86 Stack size/offset = 4 */
#else
                                NdrFcShort( 0x8 ),    /* MIPS &
PPC Stack size/offset = 8 */
#endif
#else
                                NdrFcShort( 0x8 ),    /* Alpha Stack
size/offset = 8 */
#endif
/* 150 */   NdrFcShort( 0x3c8 ),  /* Type Offset=968 */

            /* Parameter txn_out */

/* 152 */   NdrFcShort( 0x4113 ),         /* Flags:  must size, must
free, out, simple ref, srv alloc size=16 */
#ifndef _ALPHA_
#if !defined(_MIPS_) && !defined(_PPC_)
/* 154 */   NdrFcShort( 0x14 ),   /* x86 Stack size/offset = 20 */
#else
                                NdrFcShort( 0x18 ),   /* MIPS &
PPC Stack size/offset = 24 */
#endif
#else
                                NdrFcShort( 0x18 ),   /* Alpha Stack
size/offset = 24 */
#endif
/* 156 */   NdrFcShort( 0x3da ),  /* Type Offset=986 */

            /* Return value */

/* 158 */   NdrFcShort( 0x70 ),   /* Flags:  out, return, base type, */
#ifndef _ALPHA_
#if !defined(_MIPS_) && !defined(_PPC_)
/* 160 */   NdrFcShort( 0x18 ),   /* x86 Stack size/offset = 24 */
#else
                                NdrFcShort( 0x1c ),   /* MIPS &
PPC Stack size/offset = 28 */
#endif
#else
                                NdrFcShort( 0x20 ),   /* Alpha Stack
size/offset = 32 */
#endif
/* 162 */   0x8,                  /* FC_LONG */
                                0x0,                  /* 0 */

            /* Procedure CallSetComplete */

/* 164 */   0x33,                 /* FC_AUTO_HANDLE */
                                0x6c,                 /* Old Flags:
object, Oi2 */
/* 166 */   NdrFcLong( 0x0 ),     /* 0 */
/* 170 */   NdrFcShort( 0x8 ),    /* 8 */
#ifndef _ALPHA_
/* 172 */   NdrFcShort( 0x8 ),    /* x86, MIPS, PPC Stack size/offset
= 8 */
#else
                                NdrFcShort( 0x10 ),   /* Alpha Stack
size/offset = 16 */
#endif
/* 174 */   NdrFcShort( 0x0 ),    /* 0 */
/* 176 */   NdrFcShort( 0x8 ),    /* 8 */
/* 178 */   0x4,                  /* Oi2 Flags:  has return, */
                                0x1,                  /* 1 */

            /* Return value */

/* 180 */   NdrFcShort( 0x70 ),   /* Flags:  out, return, base type, */
#ifndef _ALPHA_
/* 182 */   NdrFcShort( 0x4 ),    /* x86, MIPS, PPC Stack size/offset
= 4 */
#else
                                NdrFcShort( 0x8 ),    /* Alpha Stack
size/offset = 8 */
#endif
/* 184 */   0x8,                  /* FC_LONG */
                                0x0,                  /* 0 */


                                0x0
    }
  };

static const MIDL_TYPE_FORMAT_STRING
__MIDL_TypeFormatString =
  {
    0,
    {
                                NdrFcShort( 0x0 ),    /* 0 */
/*  2 */
                                0x12, 0x0, /* FC_UP */
/*  4 */    NdrFcShort( 0x3b0 ), /* Offset= 944 (948) */
/*  6 */
                                0x2b,                 /*
FC_NON_ENCAPSULATED_UNION */
                                0x9,                  /* FC_ULONG
*/
/*  8 */    0x7,                  /* Corr desc: FC_USHORT */
                                0x0,                  /*  */
/* 10 */    NdrFcShort( 0xfff8 ), /* -8 */
/* 12 */    NdrFcShort( 0x2 ),    /* Offset= 2 (14) */
/* 14 */    NdrFcShort( 0x10 ),   /* 16 */
/* 16 */    NdrFcShort( 0x2b ),   /* 43 */
/* 18 */    NdrFcLong( 0x3 ),     /* 3 */
/* 22 */    NdrFcShort( 0x8008 ),         /* Simple arm type:
FC_LONG */
/* 24 */    NdrFcLong( 0x11 ),    /* 17 */
/* 28 */    NdrFcShort( 0x8001 ),         /* Simple arm type:
FC_BYTE */
/* 30 */    NdrFcLong( 0x2 ),     /* 2 */
/* 34 */    NdrFcShort( 0x8006 ),         /* Simple arm type:
FC_SHORT */
/* 36 */    NdrFcLong( 0x4 ),     /* 4 */
/* 40 */    NdrFcShort( 0x800a ),         /* Simple arm type:
FC_FLOAT */
/* 42 */    NdrFcLong( 0x5 ),     /* 5 */
/* 46 */    NdrFcShort( 0x800c ),         /* Simple arm type:
FC_DOUBLE */
/* 48 */    NdrFcLong( 0xb ),     /* 11 */
/* 52 */    NdrFcShort( 0x8006 ),         /* Simple arm type:
FC_SHORT */
```

```
/* 54 */    NdrFcLong( 0xa ),    /* 10 */
/* 58 */    NdrFcShort( 0x8008 ),           /* Simple arm type:
FC_LONG */
/* 60 */    NdrFcLong( 0x6 ),    /* 6 */
/* 64 */    NdrFcShort( 0xd6 ),  /* Offset= 214 (278) */
/* 66 */    NdrFcLong( 0x7 ),    /* 7 */
/* 70 */    NdrFcShort( 0x800c ),           /* Simple arm type:
FC_DOUBLE */
/* 72 */    NdrFcLong( 0x8 ),    /* 8 */
/* 76 */    NdrFcShort( 0xd0 ),  /* Offset= 208 (284) */
/* 78 */    NdrFcLong( 0xd ),    /* 13 */
/* 82 */    NdrFcShort( 0xe2 ),  /* Offset= 226 (308) */
/* 84 */    NdrFcLong( 0x9 ),    /* 9 */
/* 88 */    NdrFcShort( 0xee ),  /* Offset= 238 (326) */
/* 90 */    NdrFcLong( 0x2000 ),            /* 8192 */
/* 94 */    NdrFcShort( 0xfa ),  /* Offset= 250 (344) */
/* 96 */    NdrFcLong( 0x24 ),   /* 36 */
/* 100 */   NdrFcShort( 0x308 ), /* Offset= 776 (876) */
/* 102 */   NdrFcLong( 0x4024 ),            /* 16420 */
/* 106 */   NdrFcShort( 0x302 ), /* Offset= 770 (876) */
/* 108 */   NdrFcLong( 0x4011 ),            /* 16401 */
/* 112 */   NdrFcShort( 0x300 ), /* Offset= 768 (880) */
/* 114 */   NdrFcLong( 0x4002 ),            /* 16386 */
/* 118 */   NdrFcShort( 0x2fe ), /* Offset= 766 (884) */
/* 120 */   NdrFcLong( 0x4003 ),            /* 16387 */
/* 124 */   NdrFcShort( 0x2fc ), /* Offset= 764 (888) */
/* 126 */   NdrFcLong( 0x4004 ),            /* 16388 */
/* 130 */   NdrFcShort( 0x2fa ), /* Offset= 762 (892) */
/* 132 */   NdrFcLong( 0x4005 ),            /* 16389 */
/* 136 */   NdrFcShort( 0x2f8 ), /* Offset= 760 (896) */
/* 138 */   NdrFcLong( 0x400b ),            /* 16395 */
/* 142 */   NdrFcShort( 0x2e6 ), /* Offset= 742 (884) */
/* 144 */   NdrFcLong( 0x400a ),            /* 16394 */
/* 148 */   NdrFcShort( 0x2e4 ), /* Offset= 740 (888) */
/* 150 */   NdrFcLong( 0x4006 ),            /* 16390 */
/* 154 */   NdrFcShort( 0x2ea ), /* Offset= 746 (900) */
/* 156 */   NdrFcLong( 0x4007 ),            /* 16391 */
/* 160 */   NdrFcShort( 0x2e0 ), /* Offset= 736 (896) */
/* 162 */   NdrFcLong( 0x4008 ),            /* 16392 */
/* 166 */   NdrFcShort( 0x2e2 ), /* Offset= 738 (904) */
/* 168 */   NdrFcLong( 0x400d ),            /* 16397 */
/* 172 */   NdrFcShort( 0x2e0 ), /* Offset= 736 (908) */
/* 174 */   NdrFcLong( 0x4009 ),            /* 16393 */
/* 178 */   NdrFcShort( 0x2de ), /* Offset= 734 (912) */
/* 180 */   NdrFcLong( 0x6000 ),            /* 24576 */
/* 184 */   NdrFcShort( 0x2dc ), /* Offset= 732 (916) */
/* 186 */   NdrFcLong( 0x400c ),            /* 16396 */
/* 190 */   NdrFcShort( 0x2da ), /* Offset= 730 (920) */
/* 192 */   NdrFcLong( 0x10 ),   /* 16 */
/* 196 */   NdrFcShort( 0x8002 ),           /* Simple arm type:
FC_CHAR */
/* 198 */   NdrFcLong( 0x12 ),   /* 18 */
/* 202 */   NdrFcShort( 0x8006 ),           /* Simple arm type:
FC_SHORT */
/* 204 */   NdrFcLong( 0x13 ),   /* 19 */
/* 208 */   NdrFcShort( 0x8008 ),           /* Simple arm type:
FC_LONG */
/* 210 */   NdrFcLong( 0x16 ),   /* 22 */
/* 214 */   NdrFcShort( 0x8008 ),           /* Simple arm type:
FC_LONG */
/* 216 */   NdrFcLong( 0x17 ),   /* 23 */
/* 220 */   NdrFcShort( 0x8008 ),           /* Simple arm type:
FC_LONG */
/* 222 */   NdrFcLong( 0xe ),    /* 14 */
/* 226 */   NdrFcShort( 0x2be ), /* Offset= 702 (928) */
/* 228 */   NdrFcLong( 0x400e ),            /* 16398 */
/* 232 */   NdrFcShort( 0x2c4 ), /* Offset= 708 (940) */
/* 234 */   NdrFcLong( 0x4010 ),            /* 16400 */
/* 238 */   NdrFcShort( 0x2c2 ), /* Offset= 706 (944) */
/* 240 */   NdrFcLong( 0x4012 ),            /* 16402 */
/* 244 */   NdrFcShort( 0x280 ), /* Offset= 640 (884) */
/* 246 */   NdrFcLong( 0x4013 ),            /* 16403 */
/* 250 */   NdrFcShort( 0x27e ), /* Offset= 638 (888) */
/* 252 */   NdrFcLong( 0x4016 ),            /* 16406 */
/* 256 */   NdrFcShort( 0x278 ), /* Offset= 632 (888) */
/* 258 */   NdrFcLong( 0x4017 ),            /* 16407 */
/* 262 */   NdrFcShort( 0x272 ), /* Offset= 626 (888) */
/* 264 */   NdrFcLong( 0x0 ),    /* 0 */
/* 268 */   NdrFcShort( 0x0 ),   /* Offset= 0 (268) */
/* 270 */   NdrFcLong( 0x1 ),    /* 1 */
/* 274 */   NdrFcShort( 0x0 ),   /* Offset= 0 (274) */
/* 276 */   NdrFcShort( 0xffffffff ),       /* Offset= -1 (275) */
/* 278 */
                                0x15,               /*
FC_STRUCT */
                                0x7,                /* 7 */
/* 280 */   NdrFcShort( 0x8 ),   /* 8 */
/* 282 */   0xb,                /* FC_HYPER */
                                0x5b,               /* FC_END */
/* 284 */
                                0x12, 0x0, /* FC_UP */
/* 286 */   NdrFcShort( 0xc ),   /* Offset= 12 (298) */
/* 288 */
                                0x1b,               /*
FC_CARRAY */
                                0x1,                /* 1 */
/* 290 */   NdrFcShort( 0x2 ),   /* 2 */
/* 292 */   0x9,                /* Corr desc: FC_ULONG */
                                0x0,                /*  */
/* 294 */   NdrFcShort( 0xfffc ), /* -4 */
/* 296 */   0x6,                /* FC_SHORT */
                                0x5b,               /* FC_END */
/* 298 */
                                0x17,               /*
FC_CSTRUCT */
                                0x3,                /* 3 */
/* 300 */   NdrFcShort( 0x8 ),   /* 8 */
/* 302 */   NdrFcShort( 0xfffffff2 ),       /* Offset= -14 (288) */
/* 304 */   0x8,                /* FC_LONG */
                                0x8,                /* FC_LONG
*/
/* 306 */   0x5c,               /* FC_PAD */
                                0x5b,               /* FC_END */
/* 308 */
                                0x2f,               /* FC_IP */
                                0x5a,               /*
FC_CONSTANT_IID */
/* 310 */   NdrFcLong( 0x0 ),    /* 0 */
/* 314 */   NdrFcShort( 0x0 ),   /* 0 */
/* 316 */   NdrFcShort( 0x0 ),   /* 0 */
/* 318 */   0xc0,               /* 192 */
                                0x0,                /* 0 */
/* 320 */   0x0,                /* 0 */
                                0x0,                /* 0 */
/* 322 */   0x0,                /* 0 */
                                0x0,                /* 0 */
/* 324 */   0x0,                /* 0 */
                                0x46,               /* 70 */
/* 326 */
                                0x2f,               /* FC_IP */
                                0x5a,               /*
FC_CONSTANT_IID */
/* 328 */   NdrFcLong( 0x20400 ),           /* 132096 */
/* 332 */   NdrFcShort( 0x0 ),   /* 0 */
/* 334 */   NdrFcShort( 0x0 ),   /* 0 */
/* 336 */   0xc0,               /* 192 */
```

```
                                0x0,                    /* 0 */
/* 338 */   0x0,                 /* 0 */
                                0x0,                    /* 0 */
/* 340 */   0x0,                 /* 0 */
                                0x0,                    /* 0 */
/* 342 */   0x0,                 /* 0 */
                                0x46,                   /* 70 */
/* 344 */
                                0x12, 0x10,             /* FC_UP */
/* 346 */   NdrFcShort( 0x2 ),   /* Offset= 2 (348) */
/* 348 */
                                0x12, 0x0, /* FC_UP */
/* 350 */   NdrFcShort( 0x1fc ), /* Offset= 508 (858) */
/* 352 */
                                0x2a,                   /*
FC_ENCAPSULATED_UNION*/
                                0x49,                   /* 73 */
/* 354 */   NdrFcShort( 0x18 ),  /* 24 */
/* 356 */   NdrFcShort( 0xa ),   /* 10 */
/* 358 */   NdrFcLong( 0x8 ),    /* 8 */
/* 362 */   NdrFcShort( 0x58 ),  /* Offset= 88 (450) */
/* 364 */   NdrFcLong( 0xd ),    /* 13 */
/* 368 */   NdrFcShort( 0x78 ),  /* Offset= 120 (488) */
/* 370 */   NdrFcLong( 0x9 ),    /* 9 */
/* 374 */   NdrFcShort( 0x94 ),  /* Offset= 148 (522) */
/* 376 */   NdrFcLong( 0xc ),    /* 12 */
/* 380 */   NdrFcShort( 0xbc ),  /* Offset= 188 (568) */
/* 382 */   NdrFcLong( 0x24 ),   /* 36 */
/* 386 */   NdrFcShort( 0x114 ), /* Offset= 276 (662) */
/* 388 */   NdrFcLong( 0x800d ),         /* 32781 */
/* 392 */   NdrFcShort( 0x130 ), /* Offset= 304 (696) */
/* 394 */   NdrFcLong( 0x10 ),   /* 16 */
/* 398 */   NdrFcShort( 0x148 ), /* Offset= 328 (726) */
/* 400 */   NdrFcLong( 0x2 ),    /* 2 */
/* 404 */   NdrFcShort( 0x160 ), /* Offset= 352 (756) */
/* 406 */   NdrFcLong( 0x3 ),    /* 3 */
/* 410 */   NdrFcShort( 0x178 ), /* Offset= 376 (786) */
/* 412 */   NdrFcLong( 0x14 ),   /* 20 */
/* 416 */   NdrFcShort( 0x190 ), /* Offset= 400 (816) */
/* 418 */   NdrFcShort( 0xffffffff ),    /* Offset= -1 (417) */
/* 420 */
                                0x1b,                   /*
FC_CARRAY */
                                0x3,                    /* 3 */
/* 422 */   NdrFcShort( 0x4 ),   /* 4 */
/* 424 */   0x19,                /* Corr desc:  field pointer,
FC_ULONG */
                                0x0,                    /*  */
/* 426 */   NdrFcShort( 0x0 ),   /* 0 */
/* 428 */
                                0x4b,                   /* FC_PP */
                                0x5c,                   /* FC_PAD */
/* 430 */
                                0x48,                   /*
FC_VARIABLE_REPEAT*/
                                0x49,                   /*
FC_FIXED_OFFSET*/
/* 432 */   NdrFcShort( 0x4 ),   /* 4 */
/* 434 */   NdrFcShort( 0x0 ),   /* 0 */
/* 436 */   NdrFcShort( 0x1 ),   /* 1 */
/* 438 */   NdrFcShort( 0x0 ),   /* 0 */
/* 440 */   NdrFcShort( 0x0 ),   /* 0 */
/* 442 */   0x12, 0x0, /* FC_UP */
/* 444 */   NdrFcShort( 0xffffff6e ),    /* Offset= -146 (298) */
/* 446 */
                                0x5b,                   /* FC_END */
                                0x8,                    /* FC_LONG
*/
/* 448 */   0x5c,                /* FC_PAD */
                                0x5b,                   /* FC_END */
/* 450 */
                                0x16,                   /*
FC_PSTRUCT */
                                0x3,                    /* 3 */
/* 452 */   NdrFcShort( 0x8 ),   /* 8 */
/* 454 */
                                0x4b,                   /* FC_PP */
                                0x5c,                   /* FC_PAD */
/* 456 */
                                0x46,                   /*
FC_NO_REPEAT */
                                0x5c,                   /* FC_PAD */
/* 458 */   NdrFcShort( 0x4 ),   /* 4 */
/* 460 */   NdrFcShort( 0x4 ),   /* 4 */
/* 462 */   0x11, 0x0, /* FC_RP */
/* 464 */   NdrFcShort( 0xffffffd4 ),    /* Offset= -44 (420) */
/* 466 */
                                0x5b,                   /* FC_END */

                                0x8,                    /* FC_LONG
*/
/* 468 */   0x8,                 /* FC_LONG */
                                0x5b,                   /* FC_END */
/* 470 */
                                0x21,                   /*
FC_BOGUS_ARRAY */
                                0x3,                    /* 3 */
/* 472 */   NdrFcShort( 0x0 ),   /* 0 */
/* 474 */   0x19,                /* Corr desc:  field pointer,
FC_ULONG */
                                0x0,                    /*  */
/* 476 */   NdrFcShort( 0x0 ),   /* 0 */
/* 478 */   NdrFcLong( 0xffffffff ),     /* -1 */
/* 482 */   0x4c,                /* FC_EMBEDDED_COMPLEX */
                                0x0,                    /* 0 */
/* 484 */   NdrFcShort( 0xffffff50 ),    /* Offset= -176 (308) */
/* 486 */   0x5c,                /* FC_PAD */
                                0x5b,                   /* FC_END */
/* 488 */
                                0x1a,                   /*
FC_BOGUS_STRUCT */
                                0x3,                    /* 3 */
/* 490 */   NdrFcShort( 0x8 ),   /* 8 */
/* 492 */   NdrFcShort( 0x0 ),   /* 0 */
/* 494 */   NdrFcShort( 0x6 ),   /* Offset= 6 (500) */
/* 496 */   0x8,                 /* FC_LONG */
                                0x36,                   /*
FC_POINTER */
/* 498 */   0x5c,                /* FC_PAD */
                                0x5b,                   /* FC_END */
/* 500 */
                                0x11, 0x0, /* FC_RP */
/* 502 */   NdrFcShort( 0xfffffe0 ),     /* Offset= -32 (470) */
/* 504 */
                                0x21,                   /*
FC_BOGUS_ARRAY */
                                0x3,                    /* 3 */
/* 506 */   NdrFcShort( 0x0 ),   /* 0 */
/* 508 */   0x19,                /* Corr desc:  field pointer,
FC_ULONG */
                                0x0,                    /*  */
/* 510 */   NdrFcShort( 0x0 ),   /* 0 */
/* 512 */   NdrFcLong( 0xffffffff ),     /* -1 */
/* 516 */   0x4c,                /* FC_EMBEDDED_COMPLEX */
```

```
                                0x0,                    /* 0 */
/* 518 */   NdrFcShort( 0xffffff40 ),        /* Offset= -192 (326) */
/* 520 */   0x5c,                   /* FC_PAD */
                                0x5b,                   /* FC_END */
/* 522 */
                                0x1a,                   /*
FC_BOGUS_STRUCT */
                                0x3,                    /* 3 */
/* 524 */   NdrFcShort( 0x8 ),      /* 8 */
/* 526 */   NdrFcShort( 0x0 ),      /* 0 */
/* 528 */   NdrFcShort( 0x6 ),      /* Offset= 6 (534) */
/* 530 */   0x8,                    /* FC_LONG */
                                0x36,                   /*
FC_POINTER */
/* 532 */   0x5c,                   /* FC_PAD */
                                0x5b,                   /* FC_END */
/* 534 */
                                0x11, 0x0, /* FC_RP */
/* 536 */   NdrFcShort( 0xffffffe0 ),        /* Offset= -32 (504) */
/* 538 */
                                0x1b,                   /*
FC_CARRAY */
                                0x3,                    /* 3 */
/* 540 */   NdrFcShort( 0x4 ),      /* 4 */
/* 542 */   0x19,                   /* Corr desc:  field pointer,
FC_ULONG */
                                0x0,                    /*  */
/* 544 */   NdrFcShort( 0x0 ),      /* 0 */
/* 546 */
                                0x4b,                   /* FC_PP */
                                0x5c,                   /* FC_PAD */
/* 548 */
                                0x48,                   /*
FC_VARIABLE_REPEAT */
                                0x49,                   /*
FC_FIXED_OFFSET */
/* 550 */   NdrFcShort( 0x4 ),      /* 4 */
/* 552 */   NdrFcShort( 0x0 ),      /* 0 */
/* 554 */   NdrFcShort( 0x1 ),      /* 1 */
/* 556 */   NdrFcShort( 0x0 ),      /* 0 */
/* 558 */   NdrFcShort( 0x0 ),      /* 0 */
/* 560 */   0x12, 0x0, /* FC_UP */
/* 562 */   NdrFcShort( 0xfffffdce ),        /* Offset= -562 (0) */
/* 564 */
                                0x5b,                   /* FC_END */

                                0x8,                    /* FC_LONG
*/
/* 566 */   0x5c,                   /* FC_PAD */
                                0x5b,                   /* FC_END */
/* 568 */
                                0x1a,                   /*
FC_BOGUS_STRUCT */
                                0x3,                    /* 3 */
/* 570 */   NdrFcShort( 0x8 ),      /* 8 */
/* 572 */   NdrFcShort( 0x0 ),      /* 0 */
/* 574 */   NdrFcShort( 0x6 ),      /* Offset= 6 (580) */
/* 576 */   0x8,                    /* FC_LONG */
                                0x36,                   /*
FC_POINTER */
/* 578 */   0x5c,                   /* FC_PAD */
                                0x5b,                   /* FC_END */
/* 580 */
                                0x11, 0x0, /* FC_RP */
/* 582 */   NdrFcShort( 0xfffffd4 ),         /* Offset= -44 (538) */
/* 584 */
                                0x2f,                   /* FC_IP */
                                0x5a,                   /*
FC_CONSTANT_IID */
/* 586 */   NdrFcLong( 0x2f ),      /* 47 */
/* 590 */   NdrFcShort( 0x0 ),      /* 0 */
/* 592 */   NdrFcShort( 0x0 ),      /* 0 */
/* 594 */   0xc0,                   /* 192 */
                                0x0,                    /* 0 */
/* 596 */   0x0,                    /* 0 */
                                0x0,                    /* 0 */
/* 598 */   0x0,                    /* 0 */
                                0x0,                    /* 0 */
/* 600 */   0x0,                    /* 0 */
                                0x46,                   /* 70 */
/* 602 */
                                0x1b,                   /*
FC_CARRAY */
                                0x0,                    /* 0 */
/* 604 */   NdrFcShort( 0x1 ),      /* 1 */
/* 606 */   0x19,                   /* Corr desc:  field pointer,
FC_ULONG */
                                0x0,                    /*  */
/* 608 */   NdrFcShort( 0x4 ),      /* 4 */
/* 610 */   0x1,                    /* FC_BYTE */
                                0x5b,                   /* FC_END */
/* 612 */
                                0x1a,                   /*
FC_BOGUS_STRUCT */
                                0x3,                    /* 3 */
/* 614 */   NdrFcShort( 0x10 ),     /* 16 */
/* 616 */   NdrFcShort( 0x0 ),      /* 0 */
/* 618 */   NdrFcShort( 0xa ),      /* Offset= 10 (628) */
/* 620 */   0x8,                    /* FC_LONG */
                                0x8,                    /* FC_LONG
*/
/* 622 */   0x4c,                   /* FC_EMBEDDED_COMPLEX */
                                0x0,                    /* 0 */
/* 624 */   NdrFcShort( 0xffffffd8 ),        /* Offset= -40 (584) */
/* 626 */   0x36,                   /* FC_POINTER */
                                0x5b,                   /* FC_END */
/* 628 */
                                0x12, 0x0, /* FC_UP */
/* 630 */   NdrFcShort( 0xffffffe4 ),        /* Offset= -28 (602) */
/* 632 */
                                0x1b,                   /*
FC_CARRAY */
                                0x3,                    /* 3 */
/* 634 */   NdrFcShort( 0x4 ),      /* 4 */
/* 636 */   0x19,                   /* Corr desc:  field pointer,
FC_ULONG */
                                0x0,                    /*  */
/* 638 */   NdrFcShort( 0x0 ),      /* 0 */
/* 640 */
                                0x4b,                   /* FC_PP */
                                0x5c,                   /* FC_PAD */
/* 642 */
                                0x48,                   /*
FC_VARIABLE_REPEAT */
                                0x49,                   /*
FC_FIXED_OFFSET */
/* 644 */   NdrFcShort( 0x4 ),      /* 4 */
/* 646 */   NdrFcShort( 0x0 ),      /* 0 */
/* 648 */   NdrFcShort( 0x1 ),      /* 1 */
/* 650 */   NdrFcShort( 0x0 ),      /* 0 */
/* 652 */   NdrFcShort( 0x0 ),      /* 0 */
/* 654 */   0x12, 0x0, /* FC_UP */
/* 656 */   NdrFcShort( 0xfffffd4 ),         /* Offset= -44 (612) */
/* 658 */
                                0x5b,                   /* FC_END */
```

```
                                0x8,                    /* FC_LONG
*/
/* 660 */   0x5c,               /* FC_PAD */
                                0x5b,                   /* FC_END */
/* 662 */
                                0x1a,                   /*
FC_BOGUS_STRUCT */
                                0x3,                    /* 3 */
/* 664 */   NdrFcShort( 0x8 ),  /* 8 */
/* 666 */   NdrFcShort( 0x0 ),  /* 0 */
/* 668 */   NdrFcShort( 0x6 ),  /* Offset= 6 (674) */
/* 670 */   0x8,                /* FC_LONG */
                                0x36,                   /*
FC_POINTER */
/* 672 */   0x5c,               /* FC_PAD */
                                0x5b,                   /* FC_END */
/* 674 */
                                0x11, 0x0, /* FC_RP */
/* 676 */   NdrFcShort( 0xffffffd4 ),           /* Offset= -44 (632) */
/* 678 */
                                0x1d,                   /*
FC_SMFARRAY */
                                0x0,                    /* 0 */
/* 680 */   NdrFcShort( 0x8 ),  /* 8 */
/* 682 */   0x2,                /* FC_CHAR */
                                0x5b,                   /* FC_END */
/* 684 */
                                0x15,                   /*
FC_STRUCT */
                                0x3,                    /* 3 */
/* 686 */   NdrFcShort( 0x10 ), /* 16 */
/* 688 */   0x8,                /* FC_LONG */
                                0x6,                    /* FC_SHORT
*/
/* 690 */   0x6,                /* FC_SHORT */
                                0x4c,                   /*
FC_EMBEDDED_COMPLEX */
/* 692 */   0x0,                /* 0 */
                                NdrFcShort( 0xfffffff1 ),           /*
Offset= -15 (678) */
                                0x5b,                   /* FC_END */
/* 696 */
                                0x1a,                   /*
FC_BOGUS_STRUCT */
                                0x3,                    /* 3 */
/* 698 */   NdrFcShort( 0x18 ), /* 24 */
/* 700 */   NdrFcShort( 0x0 ),  /* 0 */
/* 702 */   NdrFcShort( 0xa ),  /* Offset= 10 (712) */
/* 704 */   0x8,                /* FC_LONG */
                                0x36,                   /*
FC_POINTER */
/* 706 */   0x4c,               /* FC_EMBEDDED_COMPLEX */
                                0x0,                    /* 0 */
/* 708 */   NdrFcShort( 0xffffffe8 ),           /* Offset= -24 (684) */
/* 710 */   0x5c,               /* FC_PAD */
                                0x5b,                   /* FC_END */
/* 712 */
                                0x11, 0x0, /* FC_RP */
/* 714 */   NdrFcShort( 0xfffffff0c ),          /* Offset= -244 (470) */
/* 716 */
                                0x1b,                   /*
FC_CARRAY */
                                0x0,                    /* 0 */
/* 718 */   NdrFcShort( 0x1 ),  /* 1 */
/* 720 */   0x19,               /* Corr desc:  field pointer,
FC_ULONG */
                                0x0,                    /*  */
/* 722 */   NdrFcShort( 0x0 ),  /* 0 */
/* 724 */   0x1,                /* FC_BYTE */
                                0x5b,                   /* FC_END */
/* 726 */
                                0x16,                   /*
FC_PSTRUCT */
                                0x3,                    /* 3 */
/* 728 */   NdrFcShort( 0x8 ),  /* 8 */
/* 730 */
                                0x4b,                   /* FC_PP */
                                0x5c,                   /* FC_PAD */
/* 732 */
                                0x46,                   /*
FC_NO_REPEAT */
                                0x5c,                   /* FC_PAD */
/* 734 */   NdrFcShort( 0x4 ),  /* 4 */
/* 736 */   NdrFcShort( 0x4 ),  /* 4 */
/* 738 */   0x12, 0x0, /* FC_UP */
/* 740 */   NdrFcShort( 0xffffffe8 ),           /* Offset= -24 (716) */
/* 742 */
                                0x5b,                   /* FC_END */

                                0x8,                    /* FC_LONG
*/
/* 744 */   0x8,                /* FC_LONG */
                                0x5b,                   /* FC_END */
/* 746 */
                                0x1b,                   /*
FC_CARRAY */
                                0x1,                    /* 1 */
/* 748 */   NdrFcShort( 0x2 ),  /* 2 */
/* 750 */   0x19,               /* Corr desc:  field pointer,
FC_ULONG */
                                0x0,                    /*  */
/* 752 */   NdrFcShort( 0x0 ),  /* 0 */
/* 754 */   0x6,                /* FC_SHORT */
                                0x5b,                   /* FC_END */
/* 756 */
                                0x16,                   /*
FC_PSTRUCT */
                                0x3,                    /* 3 */
/* 758 */   NdrFcShort( 0x8 ),  /* 8 */
/* 760 */
                                0x4b,                   /* FC_PP */
                                0x5c,                   /* FC_PAD */
/* 762 */
                                0x46,                   /*
FC_NO_REPEAT */
                                0x5c,                   /* FC_PAD */
/* 764 */   NdrFcShort( 0x4 ),  /* 4 */
/* 766 */   NdrFcShort( 0x4 ),  /* 4 */
/* 768 */   0x12, 0x0, /* FC_UP */
/* 770 */   NdrFcShort( 0xffffffe8 ),           /* Offset= -24 (746) */
/* 772 */
                                0x5b,                   /* FC_END */

                                0x8,                    /* FC_LONG
*/
/* 774 */   0x8,                /* FC_LONG */
                                0x5b,                   /* FC_END */
/* 776 */
                                0x1b,                   /*
FC_CARRAY */
                                0x3,                    /* 3 */
/* 778 */   NdrFcShort( 0x4 ),  /* 4 */
/* 780 */   0x19,               /* Corr desc:  field pointer,
FC_ULONG */
                                0x0,                    /*  */
```

```
/* 782 */   NdrFcShort( 0x0 ),    /* 0 */
/* 784 */   0x8,                  /* FC_LONG */
                                  0x5b,                 /* FC_END */
/* 786 */
                                  0x16,                 /*
FC_PSTRUCT */
                                  0x3,                  /* 3 */
/* 788 */   NdrFcShort( 0x8 ),    /* 8 */
/* 790 */
                                  0x4b,                 /* FC_PP */
                                  0x5c,                 /* FC_PAD */
/* 792 */
                                  0x46,                 /*
FC_NO_REPEAT */
                                  0x5c,                 /* FC_PAD */
/* 794 */   NdrFcShort( 0x4 ),    /* 4 */
/* 796 */   NdrFcShort( 0x4 ),    /* 4 */
/* 798 */   0x12, 0x0, /* FC_UP */
/* 800 */   NdrFcShort( 0xfffffff8 ),         /* Offset= -24 (776) */
/* 802 */
                                  0x5b,                 /* FC_END */
                                  0x8,                  /* FC_LONG
*/
/* 804 */   0x8,                  /* FC_LONG */
                                  0x5b,                 /* FC_END */
/* 806 */
                                  0x1b,                 /*
FC_CARRAY */
                                  0x7,                  /* 7 */
/* 808 */   NdrFcShort( 0x8 ),    /* 8 */
/* 810 */   0x19,                 /* Corr desc:  field pointer,
FC_ULONG */
                                  0x0,                  /*  */
/* 812 */   NdrFcShort( 0x0 ),    /* 0 */
/* 814 */   0xb,                  /* FC_HYPER */
                                  0x5b,                 /* FC_END */
/* 816 */
                                  0x16,                 /*
FC_PSTRUCT */
                                  0x3,                  /* 3 */
/* 818 */   NdrFcShort( 0x8 ),    /* 8 */
/* 820 */
                                  0x4b,                 /* FC_PP */
                                  0x5c,                 /* FC_PAD */
/* 822 */
                                  0x46,                 /*
FC_NO_REPEAT */
                                  0x5c,                 /* FC_PAD */
/* 824 */   NdrFcShort( 0x4 ),    /* 4 */
/* 826 */   NdrFcShort( 0x4 ),    /* 4 */
/* 828 */   0x12, 0x0, /* FC_UP */
/* 830 */   NdrFcShort( 0xfffffff8 ),         /* Offset= -24 (806) */
/* 832 */
                                  0x5b,                 /* FC_END */
                                  0x8,                  /* FC_LONG
*/
/* 834 */   0x8,                  /* FC_LONG */
                                  0x5b,                 /* FC_END */
/* 836 */
                                  0x15,                 /*
FC_STRUCT */
                                  0x3,                  /* 3 */
/* 838 */   NdrFcShort( 0x8 ),    /* 8 */
/* 840 */   0x8,                  /* FC_LONG */
                                  0x8,                  /* FC_LONG
*/
/* 842 */   0x5c,                 /* FC_PAD */
                                  0x5b,                 /* FC_END */
/* 844 */
                                  0x1b,                 /*
FC_CARRAY */
                                  0x3,                  /* 3 */
/* 846 */   NdrFcShort( 0x8 ),    /* 8 */
/* 848 */   0x7,                  /* Corr desc: FC_USHORT */
                                  0x0,                  /*  */
/* 850 */   NdrFcShort( 0xffd8 ), /* -40 */
/* 852 */   0x4c,                 /* FC_EMBEDDED_COMPLEX */
                                  0x0,                  /* 0 */
/* 854 */   NdrFcShort( 0xffffffee ),         /* Offset= -18 (836) */
/* 856 */   0x5c,                 /* FC_PAD */
                                  0x5b,                 /* FC_END */
/* 858 */
                                  0x1a,                 /*
FC_BOGUS_STRUCT */
                                  0x3,                  /* 3 */
/* 860 */   NdrFcShort( 0x28 ),   /* 40 */
/* 862 */   NdrFcShort( 0xffffffee ),         /* Offset= -18 (844) */
/* 864 */   NdrFcShort( 0x0 ),    /* Offset= 0 (864) */
/* 866 */   0x6,                  /* FC_SHORT */
                                  0x6,                  /* FC_SHORT
*/
/* 868 */   0x38,                 /* FC_ALIGNM4 */
                                  0x8,                  /* FC_LONG
*/
/* 870 */   0x8,                  /* FC_LONG */
                                  0x4c,                 /*
FC_EMBEDDED_COMPLEX */
/* 872 */   0x0,                  /* 0 */
                                  NdrFcShort( 0xfffffdf7 ),         /*
Offset= -521 (352) */
                                  0x5b,                 /* FC_END */
/* 876 */
                                  0x12, 0x0, /* FC_UP */
/* 878 */   NdrFcShort( 0xfffffef6 ),         /* Offset= -266 (612) */
/* 880 */
                                  0x12, 0x8, /* FC_UP
[simple_pointer] */
/* 882 */   0x1,                  /* FC_BYTE */
                                  0x5c,                 /* FC_PAD */
/* 884 */
                                  0x12, 0x8, /* FC_UP
[simple_pointer] */
/* 886 */   0x6,                  /* FC_SHORT */
                                  0x5c,                 /* FC_PAD */
/* 888 */
                                  0x12, 0x8, /* FC_UP
[simple_pointer] */
/* 890 */   0x8,                  /* FC_LONG */
                                  0x5c,                 /* FC_PAD */
/* 892 */
                                  0x12, 0x8, /* FC_UP
[simple_pointer] */
/* 894 */   0xa,                  /* FC_FLOAT */
                                  0x5c,                 /* FC_PAD */
/* 896 */
                                  0x12, 0x8, /* FC_UP
[simple_pointer] */
/* 898 */   0xc,                  /* FC_DOUBLE */
                                  0x5c,                 /* FC_PAD */
/* 900 */
                                  0x12, 0x0, /* FC_UP */
/* 902 */   NdrFcShort( 0xfffffd90 ),         /* Offset= -624 (278) */
/* 904 */
                                  0x12, 0x10,           /* FC_UP */
```

```
/* 906 */   NdrFcShort( 0xfffffd92 ),          /* Offset= -622 (284) */
/* 908 */
                                    0x12, 0x10,             /* FC_UP */
/* 910 */   NdrFcShort( 0xfffffda6 ),          /* Offset= -602 (308) */
/* 912 */
                                    0x12, 0x10,             /* FC_UP */
/* 914 */   NdrFcShort( 0xfffffdb4 ),          /* Offset= -588 (326) */
/* 916 */
                                    0x12, 0x10,             /* FC_UP */
/* 918 */   NdrFcShort( 0xfffffdc2 ),          /* Offset= -574 (344) */
/* 920 */
                                    0x12, 0x10,             /* FC_UP */
/* 922 */   NdrFcShort( 0x2 ),     /* Offset= 2 (924) */
/* 924 */
                                    0x12, 0x0, /* FC_UP */
/* 926 */   NdrFcShort( 0xfffffc62 ),          /* Offset= -926 (0) */
/* 928 */
                                    0x15,                   /*
FC_STRUCT */
                                    0x7,                    /* 7 */
/* 930 */   NdrFcShort( 0x10 ),    /* 16 */
/* 932 */   0x6,                   /* FC_SHORT */
                                    0x1,                    /* FC_BYTE
*/
/* 934 */   0x1,                   /* FC_BYTE */
                                    0x38,                   /*
FC_ALIGNM4 */
/* 936 */   0x8,                   /* FC_LONG */
                                    0x39,                   /*
FC_ALIGNM8 */
/* 938 */   0xb,                   /* FC_HYPER */
                                    0x5b,                   /* FC_END */
/* 940 */
                                    0x12, 0x0, /* FC_UP */
/* 942 */   NdrFcShort( 0xfffffff2 ),          /* Offset= -14 (928) */
/* 944 */
                                    0x12, 0x8, /* FC_UP
[simple_pointer] */
/* 946 */   0x2,                   /* FC_CHAR */
                                    0x5c,                   /* FC_PAD */
/* 948 */
                                    0x1a,                   /*
FC_BOGUS_STRUCT */
                                    0x7,                    /* 7 */
/* 950 */   NdrFcShort( 0x20 ),    /* 32 */
/* 952 */   NdrFcShort( 0x0 ),     /* 0 */
/* 954 */   NdrFcShort( 0x0 ),     /* Offset= 0 (954) */
/* 956 */   0x8,                   /* FC_LONG */
                                    0x8,                    /* FC_LONG
*/
/* 958 */   0x6,                   /* FC_SHORT */
                                    0x6,                    /* FC_SHORT
*/
/* 960 */   0x6,                   /* FC_SHORT */
                                    0x6,                    /* FC_SHORT
*/
/* 962 */   0x4c,                  /* FC_EMBEDDED_COMPLEX */
                                    0x0,                    /* 0 */
/* 964 */   NdrFcShort( 0xfffffc42 ),          /* Offset= -958 (6) */
/* 966 */   0x5c,                  /* FC_PAD */
                                    0x5b,                   /* FC_END */
/* 968 */   0xb4,                  /* FC_USER_MARSHAL */
                                    0x83,                   /* 131 */
/* 970 */   NdrFcShort( 0x0 ),     /* 0 */
/* 972 */   NdrFcShort( 0x10 ),    /* 16 */
/* 974 */   NdrFcShort( 0x0 ),     /* 0 */
/* 976 */   NdrFcShort( 0xfffffc32 ),          /* Offset= -974 (2) */
/* 978 */
                                    0x11, 0x4, /* FC_RP
[alloced_on_stack] */
/* 980 */   NdrFcShort( 0x6 ),     /* Offset= 6 (986) */
/* 982 */
                                    0x13, 0x0, /* FC_OP */
/* 984 */   NdrFcShort( 0xffffffdc ),          /* Offset= -36 (948) */
/* 986 */   0xb4,                  /* FC_USER_MARSHAL */
                                    0x83,                   /* 131 */
/* 988 */   NdrFcShort( 0x0 ),     /* 0 */
/* 990 */   NdrFcShort( 0x10 ),    /* 16 */
/* 992 */   NdrFcShort( 0x0 ),     /* 0 */
/* 994 */   NdrFcShort( 0xfffffff4 ),          /* Offset= -12 (982) */

                                    0x0
        }
    };

const CInterfaceProxyVtbl * _tpcc_com_ps_ProxyVtblList[] =
{
    ( CInterfaceProxyVtbl *) &_ITPCCProxyVtbl,
    0
};

const CInterfaceStubVtbl * _tpcc_com_ps_StubVtblList[] =
{
    ( CInterfaceStubVtbl *) &_ITPCCStubVtbl,
    0
};

PCInterfaceName const _tpcc_com_ps_InterfaceNamesList[] =
{
    "ITPCC",
    0
};


#define _tpcc_com_ps_CHECK_IID(n)
IID_GENERIC_CHECK_IID(_tpcc_com_ps, pIID, n)

int __stdcall _tpcc_com_ps_IID_Lookup( const IID * pIID, int *
pIndex )
{

    if(!_tpcc_com_ps_CHECK_IID(0))
        {
        *pIndex = 0;
        return 1;
        }

    return 0;
}

const ExtendedProxyFileInfo tpcc_com_ps_ProxyFileInfo =
{
    (PCInterfaceProxyVtblList *) & _tpcc_com_ps_ProxyVtblList,
    (PCInterfaceStubVtblList *) & _tpcc_com_ps_StubVtblList,
    (const PCInterfaceName * ) & _tpcc_com_ps_InterfaceNamesList,
    0, // no delegation
    & _tpcc_com_ps_IID_Lookup,
    1,
    2,
    0, /* table of [async_uuid] interfaces */
    0, /* Filler1 */
    0, /* Filler2 */
    0  /* Filler3 */
};
```

tpcc_com_rem.cpp

```
/*          FILE:                   TPCC_COM.CPP
 *                                          Microsoft TPC-C Kit Ver.
4.20.000
 *                                          Copyright Microsoft,
1999
 *          All Rights Reserved
 *
 *                                          not yet audited
 *
 *          PURPOSE:            Source file for TPC-C COM+ class
implementation.
 *          Contact:    Charles Levine (clevine@microsoft.com)
 *
 *  Change history:
 *                      4.20.000 - first version
 */

// needed for CoinitializeEx
#define _WIN32_WINNT 0x0400

#include <windows.h>

// need to declare functions for export
#define DllDecl  __declspec( dllexport )

#include "..\..\common\src\trans.h"                         //tpckit
transaction header contains defination of structures specific to TPC-C
#include "..\..\common\src\error.h"
#include "..\..\common\src\txn_base.h"
#include "tpcc_com_rem.h"

#include "..\..\tpcc_com_remote_ps\src\tpcc_com_remote_ps_i.c"
#include "..\..\tpcc_com_remote\src\tpcc_com_remote_i.c"

// wrapper routine for class constructor
__declspec(dllexport) CTPCC_COM_REM*
CTPCC_COM_REM_new(BOOL bSinglePool)
{
        return new CTPCC_COM_REM(bSinglePool);
}

CTPCC_COM_REM::CTPCC_COM_REM(BOOL bSinglePool)
{
        HRESULT hr = NULL;
        long lRet = 0;
        ULONG ulTmpSize = 0;

        m_bSinglePool = bSinglePool;

        m_pNewOrder                 = NULL;
        m_pPayment                  = NULL;
        m_pStockLevel       = NULL;
        m_pOrderStatus      = NULL;
/*
        m_pTxn =
(COM_DATA*)CoTaskMemAlloc(sizeof(COM_DATA));
        if (!m_pTxn)
                throw new CCOMERR( E_FAIL );
*/
        ulTmpSize = (ULONG) sizeof(COM_DATA);
        VariantInit(&m_vTxn);
        m_vTxn.vt = VT_SAFEARRAY;


        m_vTxn.parray = SafeArrayCreateVector(
VT_UI1,

ulTmpSize,

ulTmpSize);
        if (!m_vTxn.parray)
                throw new CCOMERR( E_FAIL );

        memset((void*)m_vTxn.parray->pvData,0,ulTmpSize);

        m_pTxn = (COM_DATA*)m_vTxn.parray->pvData;

        hr = CoInitializeEx(NULL, COINIT_MULTITHREADED);
        if (FAILED(hr))
        {
                throw new CCOMERR( hr );
        }

        // create components
        if (m_bSinglePool)
        {
                hr = CoCreateInstance(CLSID_TPCCrem,
NULL, CLSCTX_SERVER, IID_ITPCCrem, (void
**)&m_pNewOrder);
                if (FAILED(hr))
                        throw new CCOMERR(hr);

                // all txns will use same component
                m_pPayment = m_pNewOrder;
                m_pStockLevel = m_pNewOrder;
                m_pOrderStatus = m_pNewOrder;
        }
        else
        {
                // use different components for each txn

                hr = CoCreateInstance(CLSID_NewOrder,
NULL, CLSCTX_SERVER, IID_ITPCCrem, (void
**)&m_pNewOrder);
                if (FAILED(hr))
                        throw new CCOMERR(hr);

                hr = CoCreateInstance(CLSID_Payment, NULL,
CLSCTX_SERVER, IID_ITPCCrem, (void **)&m_pPayment);
                if (FAILED(hr))
                        throw new CCOMERR(hr);

                hr = CoCreateInstance(CLSID_StockLevel,
NULL, CLSCTX_SERVER, IID_ITPCCrem, (void
**)&m_pStockLevel);
                if (FAILED(hr))
                        throw new CCOMERR(hr);

                hr = CoCreateInstance(CLSID_OrderStatus,
NULL, CLSCTX_SERVER, IID_ITPCCrem, (void
**)&m_pOrderStatus);
                if (FAILED(hr))
                        throw new CCOMERR(hr);
        }

        // call setcomplete to release each component back into pool
        hr = m_pNewOrder->CallSetComplete();
        if (FAILED(hr))
                throw new CCOMERR(hr);

        if (!m_bSinglePool)
        {
```

```
                hr = m_pPayment->CallSetComplete();
                if (FAILED(hr))
                        throw new CCOMERR(hr);

                hr = m_pStockLevel->CallSetComplete();
                if (FAILED(hr))
                        throw new CCOMERR(hr);

                hr = m_pOrderStatus->CallSetComplete();
                if (FAILED(hr))
                        throw new CCOMERR(hr);
        }
}

CTPCC_COM_REM::~CTPCC_COM_REM()
{
        if (m_pTxn)
                SafeArrayDestroy(m_vTxn.parray);

        ReleaseInterface(m_pNewOrder);
        if (!m_bSinglePool)
        {
                ReleaseInterface(m_pPayment);
                ReleaseInterface(m_pStockLevel);
                ReleaseInterface(m_pOrderStatus);
        }
        CoUninitialize();
}

void CTPCC_COM_REM::NewOrder()
{
        VARIANT   vTxn_out;


        HRESULT hr = m_pNewOrder->NewOrder(m_vTxn,
&vTxn_out);
        if (FAILED(hr))
                throw new CCOMERR( hr );
        memcpy(m_pTxn, (void
*)vTxn_out.parray->pvData,vTxn_out.parray->rgsabound[0].cElement
s);
        SafeArrayDestroy(vTxn_out.parray);

        if ( m_pTxn->ErrorType != ERR_SUCCESS )
                throw new CCOMERR( m_pTxn->ErrorType,
m_pTxn->error );
}

void CTPCC_COM_REM::Payment()
{
        VARIANT   vTxn_out;

        HRESULT hr = m_pPayment->Payment(m_vTxn,
&vTxn_out);
        if (FAILED(hr))
                throw new CCOMERR( hr );
        memcpy(m_pTxn, (void
*)vTxn_out.parray->pvData,vTxn_out.parray->rgsabound[0].cElement
s);
        SafeArrayDestroy(vTxn_out.parray);

        if ( m_pTxn->ErrorType != ERR_SUCCESS )
                throw new CCOMERR( m_pTxn->ErrorType,
m_pTxn->error );
}

void CTPCC_COM_REM::StockLevel()
{
        VARIANT   vTxn_out;

        HRESULT hr = m_pStockLevel->StockLevel(m_vTxn,
&vTxn_out);
        if (FAILED(hr))
                throw new CCOMERR( hr );
        memcpy(m_pTxn, (void
*)vTxn_out.parray->pvData,vTxn_out.parray->rgsabound[0].cElement
s);
        SafeArrayDestroy(vTxn_out.parray);

        if ( m_pTxn->ErrorType != ERR_SUCCESS )
                throw new CCOMERR( m_pTxn->ErrorType,
m_pTxn->error );
}

void CTPCC_COM_REM::OrderStatus()
{
        VARIANT   vTxn_out;

        HRESULT hr = m_pOrderStatus->OrderStatus(m_vTxn,
&vTxn_out);
        if (FAILED(hr))
                throw new CCOMERR( hr );
        memcpy(m_pTxn, (void
*)vTxn_out.parray->pvData,vTxn_out.parray->rgsabound[0].cElement
s);
        SafeArrayDestroy(vTxn_out.parray);

        if ( m_pTxn->ErrorType != ERR_SUCCESS )
                throw new CCOMERR( m_pTxn->ErrorType,
m_pTxn->error );
}
```

tpcc_com_rem.h

```
/*      FILE:           TPCC_COM.H
 *                              Microsoft TPC-C Kit Ver.
4.20.000
 *                              Copyright Microsoft,
1999
 *      All Rights Reserved
 *
 *                              not yet audited
 *
 *      PURPOSE:        Header file for TPC-C COM+ class
implementation.
 *
 *  Change history:
 *              4.20.000 - first version
 */

#pragma once

#include <stdio.h>
#include "..\..\tpcc_com_ps\src\tpcc_com_ps.h"
#include "..\..\tpcc_com_remote_ps\src\tpcc_com_remote_ps.h"


// need to declare functions for import, unless define has already been
created
// by the DLL's .cpp module for export.
#ifndef DllDecl
#define DllDecl  __declspec( dllimport )
#endif

class CCOMERR : public CBaseErr
```

```
{
        private:
                char m_szErrorText[64];

        public:
                // use this interface for genuine COM errors
                CCOMERR( HRESULT hr )
                {
                        m_hr = hr;
                        m_iErrorType = 0;
                        m_iError = 0;
                }

                // use this interface to impersonate a non-COM
error type
                CCOMERR( int iErrorType, int iError )
                {
                        m_iErrorType = iErrorType;
                        m_iError = iError;
                        m_hr = S_OK;
                }

                int             m_hr;
                int             m_iErrorType;
                int             m_iError;

                // A CCOMERR class can impersonate another
class, which happens if the error
                // was not actually a COM Services error, but
was simply transmitted back via COM.
                int ErrorType()
                {
                        if (m_iErrorType == 0)
                                return ERR_TYPE_COM;
                        else
                                return m_iErrorType;
                }

                int ErrorNum() {return m_hr;}

                char *ErrorText()
                {
                        if (m_hr == S_OK)
                                sprintf( m_szErrorText,
"Error: Class %d, error # %d", m_iErrorType, m_iError );
                        else
                                sprintf( m_szErrorText,
"Error: COM HRESULT %x", m_hr );
                        return m_szErrorText;
                }
};

class DllDecl CTPCC_COM : public CTPCC_BASE
{
        private:
                BOOL m_bSinglePool;

                // COM Interface pointers
                ITPCC*                  m_pNewOrder;
                ITPCC*                  m_pPayment;
                ITPCC*
m_pStockLevel;
                ITPCC*
m_pOrderStatus;

                struct COM_DATA
                {
                        int ErrorType;
                        int error;
                        union
                        {
                                NEW_ORDER_DATA
        NewOrder;
                                PAYMENT_DATA
Payment;
                                DELIVERY_DATA
Delivery;
                                STOCK_LEVEL_DATA
StockLevel;

ORDER_STATUS_DATA       OrderStatus;
                        } u;
                } *m_pTxn;

                VARIANT m_vTxn;
        public:
                CTPCC_COM(BOOL bSinglePool);
                ~CTPCC_COM(void);

                inline PNEW_ORDER_DATA
BuffAddr_NewOrder()             { return
&m_pTxn->u.NewOrder;    };
                inline PPAYMENT_DATA
BuffAddr_Payment()      { return &m_pTxn->u.Payment;    };
                inline PDELIVERY_DATA
BuffAddr_Delivery()     { return &m_pTxn->u.Delivery;   };
                inline PSTOCK_LEVEL_DATA
BuffAddr_StockLevel()   { return &m_pTxn->u.StockLevel; };
                inline PORDER_STATUS_DATA
BuffAddr_OrderStatus()  { return &m_pTxn->u.OrderStatus;
};

                void NewOrder           ();
                void Payment            ();
                void StockLevel         ();
                void OrderStatus        ();
                void Delivery           () { throw new
CCOMERR(E_NOTIMPL); }  // not supported
};


inline void ReleaseInterface(IUnknown *pUnk)
{
        if (pUnk)
        {
                pUnk->Release();
                pUnk = NULL;
        }
}


// wrapper routine for class constructor
extern "C" __declspec(dllexport) CTPCC_COM*
CTPCC_COM_new(BOOL);

typedef CTPCC_COM* (TYPE_CTPCC_COM)(BOOL);

class DllDecl CTPCC_COM_REM : public CTPCC_BASE
{
        private:
                BOOL m_bSinglePool;

                // COM Interface pointers
                ITPCCrem*
m_pNewOrder;
```

```
                ITPCCrem*
m_pPayment;
                ITPCCrem*
m_pStockLevel;
                ITPCCrem*
m_pOrderStatus;

                struct COM_DATA
                {
                        int ErrorType;
                        int error;
                        union
                        {
                                NEW_ORDER_DATA
        NewOrder;
                                PAYMENT_DATA
Payment;
                                DELIVERY_DATA
Delivery;
                                STOCK_LEVEL_DATA
StockLevel;

ORDER_STATUS_DATA       OrderStatus;
                        } u;
                } *m_pTxn;

                VARIANT m_vTxn;
        public:
                CTPCC_COM_REM(BOOL bSinglePool);
                ~CTPCC_COM_REM(void);

                inline PNEW_ORDER_DATA
BuffAddr_NewOrder()             { return
&m_pTxn->u.NewOrder;    };
                inline PPAYMENT_DATA
BuffAddr_Payment()      { return &m_pTxn->u.Payment;    };
                inline PDELIVERY_DATA
BuffAddr_Delivery()     { return &m_pTxn->u.Delivery;   };
                inline PSTOCK_LEVEL_DATA
BuffAddr_StockLevel()   { return &m_pTxn->u.StockLevel; };
                inline PORDER_STATUS_DATA
BuffAddr_OrderStatus()  { return &m_pTxn->u.OrderStatus;
};

                void NewOrder           ();
                void Payment            ();
                void StockLevel         ();
                void OrderStatus        ();
                void Delivery           () { throw new
CCOMERR(E_NOTIMPL); }  // not supported
};



// wrapper routine for class constructor
extern "C" __declspec(dllexport) CTPCC_COM_REM*
CTPCC_COM_REMOTE_new(BOOL);

typedef CTPCC_COM_REM* (TYPE_CTPCC_COM_REM)(BOOL);
```

tpcc_com_remote.cpp

```
/*      FILE:           TPCC_COM_REMOTE.CPP
 *                      Microsoft TPC-C Kit Ver.
4.20.000
 *                                      Copyright Microsoft,
1999
 *      All Rights Reserved
 *
 *                                      Version 4.10.000 audited
by Richard Gimarc, Performance Metrics, 3/17/99
 *
 *      PURPOSE:        Implementation for TPC-C Tuxedo
class.
 *      Contact:    Charles Levine (clevine@microsoft.com)
 *
 *  Change history:
 *                      4.20.000 - updated rev number to match kit
 */

#define STRICT
#define _WIN32_WINNT 0x0400
#define _ATL_APARTMENT_THREADED

#include <stdio.h>
#include <atlbase.h>
//You may derive a class from CComModule and use it if you want to
override
//something, but do not change the name of _Module
extern CComModule _Module;

#include <atlcom.h>
#include <initguid.h>
#include <transact.h>
#include <atlimpl.cpp>
#include <comsvcs.h>

#include <sqltypes.h>
#include <sql.h>
#include <sqlext.h>

#include "tpcc_com_remote_ps.h"
#include "..\..\common\src\trans.h"
        //tpckit transaction header contains definations of structures
specific to TPC-C
#include "..\..\common\src\txn_base.h"
#include "..\..\common\src\error.h"
#include "..\..\common\src\ReadRegistry.h"
#include "..\..\db_dblib_dll\src\tpcc_dblib.h"                  //
DBLIB implementation of TPC-C txns
#include "..\..\db_odbc_dll\src\tpcc_odbc.h"            // ODBC
implementation of TPC-C txns


#include "resource.h"
#include "tpcc_com_remote.h"
#include "tpcc_com_remote_i.c"
#include "Methods.h"
#include "..\..\tpcc_com_remote_ps\src\tpcc_com_remote_ps_i.c"
#include "..\..\common\src\ReadRegistry.cpp"


CComModule _Module;

BEGIN_OBJECT_MAP(ObjectMap)
        OBJECT_ENTRY(CLSID_TPCCrem, CTPCCrem)
END_OBJECT_MAP()


// configuration settings from registry
TPCCREGISTRYDATA        Reg;
char
szMyComputerName[MAX_COMPUTERNAME_LENGTH+1];
```

```
static  HINSTANCE hLibInstanceDb = NULL;

TYPE_CTPCC_DBLIB            *pCTPCC_DBLIB_new;
TYPE_CTPCC_ODBC                     *pCTPCC_ODBC_new;


////////////////////////////////////////////////////////////////////////
// DLL Entry Point

extern "C"
BOOL WINAPI DllMain(HINSTANCE hInstance, DWORD
dwReason, LPVOID /*lpReserved*/)
{
        char szDllName[128];

        try
        {
                if (dwReason == DLL_PROCESS_ATTACH)
                {
                        _Module.Init(ObjectMap, hInstance);

DisableThreadLibraryCalls(hInstance);

                        DWORD dwSize =
MAX_COMPUTERNAME_LENGTH+1;

GetComputerName(szMyComputerName, &dwSize);
                        szMyComputerName[dwSize] = 0;

                        if ( ReadTPCCRegistrySettings(
&Reg ) )
                                throw new
CCOMPONENT_ERR( ERR_MISSING_REGISTRY_ENTRIES);

                        if (Reg.eDB_Protocol == DBLIB)
                        {
                                strcpy( szDllName,
Reg.szPath );
                                strcat( szDllName,
"tpcc_dblib.dll");
                                hLibInstanceDb =
LoadLibrary( szDllName );
                                if (hLibInstanceDb ==
NULL)
                                        throw new
CCOMPONENT_ERR( ERR_LOADDLL_FAILED,szDllName,
GetLastError() );

                                // get function pointer to
wrapper for class constructor
                                pCTPCC_DBLIB_new =
(TYPE_CTPCC_DBLIB*)
GetProcAddress(hLibInstanceDb,"CTPCC_DBLIB_new");
                                if (pCTPCC_DBLIB_new
== NULL)
                                        throw new
CCOMPONENT_ERR( ERR_GETPROCADDR_FAILED,
szDllName, GetLastError() );
                        }
                        else if (Reg.eDB_Protocol ==
ODBC)
                        {
                                strcpy( szDllName,
Reg.szPath );
                                strcat( szDllName,
"tpcc_odbc.dll");
                                hLibInstanceDb =
LoadLibrary( szDllName );
                                if (hLibInstanceDb ==
NULL)
                                        throw new
CCOMPONENT_ERR( ERR_LOADDLL_FAILED,szDllName,
GetLastError() );

                                // get function pointer to
wrapper for class constructor
                                pCTPCC_ODBC_new =
(TYPE_CTPCC_ODBC*)
GetProcAddress(hLibInstanceDb,"CTPCC_ODBC_new");
                                if (pCTPCC_ODBC_new
== NULL)
                                        throw new
CCOMPONENT_ERR( ERR_GETPROCADDR_FAILED,
szDllName, GetLastError() );
                        }


                        else
                                throw new
CCOMPONENT_ERR( ERR_UNKNOWN_DB_PROTOCOL );
                }
                else if (dwReason ==
DLL_PROCESS_DETACH)
                        _Module.Term();

        }
        catch (CBaseErr *e)
        {
                WriteMessageToEventLog(e->ErrorText());
                delete e;
                return FALSE;
        }
        catch (...)
        {
                WriteMessageToEventLog(TEXT("Unhandled
exception in object DllMain"));
                return FALSE;
        }

        return TRUE;            // OK
}

////////////////////////////////////////////////////////////////////////
// Used to determine whether the DLL can be unloaded by OLE

STDAPI DllCanUnloadNow(void)
{
        return (_Module.GetLockCount()==0) ? S_OK : S_FALSE;
}

////////////////////////////////////////////////////////////////////////
// Returns a class factory to create an object of the requested type

STDAPI DllGetClassObject(REFCLSID rclsid, REFIID riid, LPVOID*
ppv)
{
        return _Module.GetClassObject(rclsid, riid, ppv);
}

////////////////////////////////////////////////////////////////////////
// DllRegisterServer - Adds entries to the system registry

STDAPI DllRegisterServer(void)
{
```

```
        // registers object, typelib and all interfaces in typelib
        return _Module.RegisterServer(TRUE);
}

////////////////////////////////////////////////////////////////////////////
// DllUnregisterServer - Removes entries from the system registry

STDAPI DllUnregisterServer(void)
{
        _Module.UnregisterServer();
        return S_OK;
}


static void WriteMessageToEventLog(LPTSTR lpszMsg)
{
   TCHAR   szMsg[256];
   HANDLE  hEventSource;
   LPTSTR  lpszStrings[2];

   // Use event logging to log the error.
   //
   hEventSource = RegisterEventSource(NULL,
TEXT("tpcc_com_remote.dll"));

   _stprintf(szMsg, TEXT("Error in COM+ TPC-C Component: "));
   lpszStrings[0] = szMsg;
   lpszStrings[1] = lpszMsg;

   if (hEventSource != NULL)
        {
      ReportEvent(hEventSource, // handle of event source
        EVENTLOG_ERROR_TYPE,  // event type
        0,                    // event category
        0,                    // event ID
        NULL,                 // current user's SID
        2,                    // strings in  lpszStrings
        0,                    // no bytes of raw data
        (LPCTSTR *)lpszStrings,    // array of error strings
        NULL);                // no raw data

      (VOID) DeregisterEventSource(hEventSource);
   }
}

inline void ReleaseInterface(IUnknown *pUnk)
{
        if (pUnk)
        {
                pUnk->Release();
                pUnk = NULL;
        }
}

/* FUNCTION: CCOMPONENT_ERR::ErrorText
 *
 */

char* CCOMPONENT_ERR::ErrorText(void)
{
        static SERRORMSG errorMsgs[] =
        {
                { ERR_MISSING_REGISTRY_ENTRIES,
"Required entries missing from registry."
},
                { ERR_LOADDLL_FAILED,
"Load of DLL failed.  DLL="
                        },
                { ERR_GETPROCADDR_FAILED,
"Could not map proc in DLL.  GetProcAddr error.  DLL="          },
                { ERR_UNKNOWN_DB_PROTOCOL,
"Unknown database protocol specified in registry."              },
                { 0,
                ""


                }
        };

        char szTmp[256];
        int i = 0;
        while (TRUE)
        {
                if (errorMsgs[i].szMsg[0] == 0)
                {
                        strcpy( szTmp, "Unknown error
number." );
                        break;
                }
                if (m_Error == errorMsgs[i].iError)
                {
                        strcpy( szTmp, errorMsgs[i].szMsg );
                        break;
                }
                i++;
        }

        if (m_szTextDetail)
                strcat( szTmp, m_szTextDetail );
        if (m_SystemErr)
                wsprintf( szTmp+strlen(szTmp), "  Error=%d",
m_SystemErr );

        m_szErrorText = new char[strlen(szTmp)+1];
        strcpy( m_szErrorText, szTmp );
        return m_szErrorText;
}


CTPCC_Common_Remote::CTPCC_Common_Remote()
{
        m_pTxn = NULL;
        m_bCanBePooled = TRUE;
}

CTPCC_Common_Remote::~CTPCC_Common_Remote()
{
        if (m_pTxn)
                delete m_pTxn;
}

HRESULT CTPCC_Common_Remote::CallSetComplete()
{
        IObjectContext* pObjectContext = NULL;

        // get our object context
        HRESULT hr = CoGetObjectContext( IID_IObjectContext,
(void **)&pObjectContext );
        pObjectContext->SetComplete();
        ReleaseInterface(pObjectContext);
        return hr;
}

//
//      called by the ctor activator
//
```

```
STDMETHODIMP CTPCC_Common_Remote::Construct(IDispatch * pUnk)
{
	// Code to access construction string, if needed later...
	//	if (!pUnk)
	//		return E_UNEXPECTED;
	//	IObjectConstructString * pString = NULL;
	//	HRESULT hr = pUnk->QueryInterface(IID_IObjectConstructString,(void **)&pString);
	//	pString->Release();
	try
	{
		if (Reg.eDB_Protocol == ODBC)
			m_pTxn = pCTPCC_ODBC_new( Reg.szDbServer, Reg.szDbUser, Reg.szDbPassword, szMyComputerName, Reg.szDbName );
		else if (Reg.eDB_Protocol == DBLIB)
			m_pTxn = pCTPCC_DBLIB_new( Reg.szDbServer, Reg.szDbUser, Reg.szDbPassword, szMyComputerName, Reg.szDbName );
	}
	catch (CBaseErr *e)
	{
		WriteMessageToEventLog(e->ErrorText());
		delete e;
		return E_FAIL;
	}
	catch (...)
	{
		WriteMessageToEventLog(TEXT("Unhandled exception in object ::Construct"));
		return E_FAIL;
	}

	return S_OK;
}

HRESULT CTPCC_Common_Remote::NewOrder(VARIANT txn_in, VARIANT* txn_out)
{
	PNEW_ORDER_DATA		pNewOrder;
	COM_DATA		*pData;
	try
	{
		pData = (COM_DATA*)txn_in.parray->pvData;
		pNewOrder = m_pTxn->BuffAddr_NewOrder();

		memcpy(pNewOrder, &pData->u.NewOrder, sizeof(NEW_ORDER_DATA));

		VariantInit(txn_out);
		txn_out->vt = VT_SAFEARRAY;
		txn_out->parray = SafeArrayCreateVector(

VT_UI1,

txn_in.parray->rgsabound->cElements,

txn_in.parray->rgsabound->cElements);
		pData = (COM_DATA*) txn_out->parray->pvData;

		m_pTxn->NewOrder(FALSE);

		memcpy( &pData->u.NewOrder, pNewOrder, sizeof(NEW_ORDER_DATA));

		pData->retval = ERR_SUCCESS;
		pData->error = 0;
		return S_OK;
	}
	catch (CBaseErr *e)
	{
		// check for lost database connection; if yes, component is toast
		if ( ((e->ErrorType() == ERR_TYPE_DBLIB) && (e->ErrorNum() == 10005)) ||
			((e->ErrorType() == ERR_TYPE_ODBC) && (e->ErrorNum() == 10054)) )
			m_bCanBePooled = FALSE;

		pData->retval = e->ErrorType();
		pData->error = e->ErrorNum();
		delete e;
		return E_FAIL;
	}
	catch (...)
	{
		WriteMessageToEventLog(TEXT("Unhandled exception."));
		pData->retval = ERR_TYPE_LOGIC;
		pData->error = 0;
		m_bCanBePooled = FALSE;
		return E_FAIL;
	}
}

HRESULT CTPCC_Common_Remote::Payment(VARIANT txn_in, VARIANT* txn_out)
{
	PPAYMENT_DATA pPayment;
	COM_DATA		*pData;
	try
	{
		pData = (COM_DATA*)txn_in.parray->pvData;
		pPayment = m_pTxn->BuffAddr_Payment();

		memcpy(pPayment, &pData->u.Payment, sizeof(PAYMENT_DATA));

		VariantInit(txn_out);
		txn_out->vt = VT_SAFEARRAY;
		txn_out->parray = SafeArrayCreateVector(

VT_UI1,

txn_in.parray->rgsabound->cElements,

txn_in.parray->rgsabound->cElements);
		pData = (COM_DATA*) txn_out->parray->pvData;

		m_pTxn->Payment(FALSE);

		memcpy( &pData->u.Payment, pPayment, sizeof(PAYMENT_DATA));

		pData->retval = ERR_SUCCESS;
		pData->error = 0;
		return S_OK;
	}
	catch (CBaseErr *e)
	{
		// check for lost database connection; if yes, component is toast
```

```
                        if ( ((e->ErrorType() == ERR_TYPE_DBLIB)
&& (e->ErrorNum() == 10005)) ||
                                ((e->ErrorType() ==
ERR_TYPE_ODBC) && (e->ErrorNum() == 10054)) )
                                m_bCanBePooled = FALSE;

                        pData->retval = e->ErrorType();
                        pData->error = e->ErrorNum();
                        delete e;
                        return E_FAIL;
                }
                catch (...)
                {
                        WriteMessageToEventLog(TEXT("Unhandled
exception."));
                        pData->retval = ERR_TYPE_LOGIC;
                        pData->error = 0;
                        m_bCanBePooled = FALSE;
                        return E_FAIL;
                }
}

HRESULT CTPCC_Common_Remote::StockLevel(VARIANTtxn_in,
VARIANT* txn_out)
{
                PSTOCK_LEVEL_DATA       pStockLevel;
                COM_DATA                        *pData;

                try
                {
                        pData = (COM_DATA*)txn_in.parray->pvData;
                        pStockLevel =
m_pTxn->BuffAddr_StockLevel();

                        memcpy(pStockLevel, &pData->u.StockLevel,
sizeof(STOCK_LEVEL_DATA));

                        VariantInit(txn_out);
                        txn_out->vt = VT_SAFEARRAY;
                        txn_out->parray = SafeArrayCreateVector(

VT_UI1,

txn_in.parray->rgsabound->cElements,

txn_in.parray->rgsabound->cElements);
                        pData =
(COM_DATA*)txn_out->parray->pvData;

                        m_pTxn->StockLevel();

                        memcpy( &pData->u.StockLevel, pStockLevel,
sizeof(STOCK_LEVEL_DATA));

                        pData->retval = ERR_SUCCESS;
                        pData->error = 0;
                        return S_OK;
                }
                catch (CBaseErr *e)
                {
                        // check for lost database connection; if yes,
component is toast
                        if ( ((e->ErrorType() == ERR_TYPE_DBLIB)
&& (e->ErrorNum() == 10005)) ||
                                ((e->ErrorType() ==
ERR_TYPE_ODBC) && (e->ErrorNum() == 10054)) )
                                m_bCanBePooled = FALSE;

                        pData->retval = e->ErrorType();
                        pData->error = e->ErrorNum();
                        delete e;
                        return E_FAIL;
                }
                catch (...)
                {
                        WriteMessageToEventLog(TEXT("Unhandled
exception."));
                        pData->retval = ERR_TYPE_LOGIC;
                        pData->error = 0;
                        m_bCanBePooled = FALSE;
                        return E_FAIL;
                }
}

HRESULT CTPCC_Common_Remote::OrderStatus(VARIANT
txn_in, VARIANT* txn_out)
{
                PORDER_STATUS_DATA      pOrderStatus;
                COM_DATA                        *pData;
                try
                {
                        pData = (COM_DATA*)txn_in.parray->pvData;
                        pOrderStatus =
m_pTxn->BuffAddr_OrderStatus();

                        memcpy(pOrderStatus, &pData->u.OrderStatus,
sizeof(ORDER_STATUS_DATA));

                        VariantInit(txn_out);
                        txn_out->vt = VT_SAFEARRAY;
                        txn_out->parray = SafeArrayCreateVector(

VT_UI1,

txn_in.parray->rgsabound->cElements,

txn_in.parray->rgsabound->cElements);
                        pData =
(COM_DATA*)txn_out->parray->pvData;


                        m_pTxn->OrderStatus();

                        memcpy( &pData->u.OrderStatus, pOrderStatus,
sizeof(ORDER_STATUS_DATA));

                        pData->retval = ERR_SUCCESS;
                        pData->error = 0;
                        return S_OK;
                }
                catch (CBaseErr *e)
                {
                        // check for lost database connection; if yes,
component is toast
                        if ( ((e->ErrorType() == ERR_TYPE_DBLIB)
&& (e->ErrorNum() == 10005)) ||
                                ((e->ErrorType() ==
ERR_TYPE_ODBC) && (e->ErrorNum() == 10054)) )
                                m_bCanBePooled = FALSE;

                        pData->retval = e->ErrorType();
                        pData->error = e->ErrorNum();
                        delete e;
                        return E_FAIL;
                }
                catch (...)
```

```
        {
                WriteMessageToEventLog(TEXT("Unhandled
exception."));
                pData->retval = ERR_TYPE_LOGIC;
                pData->error = 0;
                m_bCanBePooled = FALSE;
                return E_FAIL;
        }
}
```

tpcc_com_remote.def

```
; tpcc_com_remote.def : Declares the module parameters.

LIBRARY     "tpcc_com_remote.dll"

EXPORTS
        DllCanUnloadNow     @1 PRIVATE
        DllGetClassObject   @2 PRIVATE
        DllRegisterServer   @3 PRIVATE
        DllUnregisterServer   @4 PRIVATE
```

tpcc_com_remote.h

```
/* this ALWAYS GENERATED file contains the definitions for the
interfaces */


/* File created by MIDL compiler version 5.01.0164 */
/* at Fri Jan 19 11:15:15 2001
 */
/* Compiler settings for .\src\tpcc_com_remote.idl:
   Oicf (OptLev=i2), W1, Zp8, env=Win32, ms_ext, c_ext
   error checks: allocation ref bounds_check enum stub_data
*/
//@@MIDL_FILE_HEADING( )


/* verify that the <rpcndr.h> version is high enough to compile this
file*/
#ifndef __REQUIRED_RPCNDR_H_VERSION__
#define __REQUIRED_RPCNDR_H_VERSION__ 440
#endif

#include "rpc.h"
#include "rpcndr.h"

#ifndef __tpcc_com_remote_h__
#define __tpcc_com_remote_h__

#ifdef __cplusplus
extern "C"{
#endif

/* Forward Declarations */

#ifndef __TPCCrem_FWD_DEFINED__
#define __TPCCrem_FWD_DEFINED__

#ifdef __cplusplus
typedef class TPCCrem TPCCrem;
#else
typedef struct TPCCrem TPCCrem;
#endif /* __cplusplus */
#endif      /* __TPCCrem_FWD_DEFINED__ */


/* header files for imported files */
#include "oaidl.h"
#include "ocidl.h"
#include "tpcc_com_remote_ps.h"

void __RPC_FAR * __RPC_USER MIDL_user_allocate(size_t);
void __RPC_USER MIDL_user_free( void __RPC_FAR * );

/* interface __MIDL_itf_tpcc_com_remote_0000 */
/* [local] */




extern RPC_IF_HANDLE
__MIDL_itf_tpcc_com_remote_0000_v0_0_c_ifspec;
extern RPC_IF_HANDLE
__MIDL_itf_tpcc_com_remote_0000_v0_0_s_ifspec;


#ifndef __TPCCremLib_LIBRARY_DEFINED__
#define __TPCCremLib_LIBRARY_DEFINED__

/* library TPCCremLib */
/* [helpstring][version][uuid] */


EXTERN_C const IID LIBID_TPCCremLib;

EXTERN_C const CLSID CLSID_TPCCrem;

#ifdef __cplusplus

class
DECLSPEC_UUID("63EC25AB-828A-4ed7-8C6C-B46D29889594")
TPCCrem;
#endif
#endif /* __TPCCremLib_LIBRARY_DEFINED__ */

/* Additional Prototypes for ALL interfaces */

/* end of Additional Prototypes */

#ifdef __cplusplus
}
#endif

#endif
```

tpcc_com_remote.idl

```
/*          FILE:                TPCC.IDL
 *                                       Microsoft TPC-C Kit Ver.
4.20.000
 *                                       Copyright Microsoft,
1999
 *          All Rights Reserved
 *
 *                                       not yet audited
 *
 *          PURPOSE:             IDL source for TPCC.dll.  This file is
processed by the MIDL tool to
 *                                       produce the type library
(TPCC.tlb) and marshalling code.
```

```
 *
 *  Change history:
 *                      4.20.000 - first version
 */

interface TPCCrem;


import "oaidl.idl";
import "ocidl.idl";
import "..\tpcc_com_remote_ps\src\tpcc_com_remote_ps.idl";

[
        uuid(B207575F-7A88-489a-9383-859E2D771537),
        version(1.0),
        helpstring("Remote TPC-C 1.0 Type Library")
]
library TPCCremLib
{
        importlib("stdole32.tlb");
        importlib("stdole2.tlb");

        [

uuid(63EC25AB-828A-4ed7-8C6C-B46D29889594),
                helpstring("Remote All Txns Class")
        ]
        coclass TPCCrem
        {
                [default] interface ITPCCrem;
        };


};
```

tpcc_com_remote.rc

```
//Microsoft Developer Studio generated resource script.
//
#include "resource.h"

#define APSTUDIO_READONLY_SYMBOLS
////////////////////////////////////////////////////////////////////////////
//
// Generated from the TEXTINCLUDE 2 resource.
//
#include "winres.h"

////////////////////////////////////////////////////////////////////////////
#undef APSTUDIO_READONLY_SYMBOLS

////////////////////////////////////////////////////////////////////////////
// English (U.S.) resources

#if !defined(AFX_RESOURCE_DLL) || defined(AFX_TARG_ENU)
#ifdef _WIN32
LANGUAGE LANG_ENGLISH, SUBLANG_ENGLISH_US
#pragma code_page(1252)
#endif //_WIN32

#ifdef APSTUDIO_INVOKED
////////////////////////////////////////////////////////////////////////////
//
// TEXTINCLUDE
//

1 TEXTINCLUDE DISCARDABLE
BEGIN
   "resource.h\0"
END

2 TEXTINCLUDE DISCARDABLE
BEGIN
   "#include ""winres.h""\r\n"
   "\0"
END

3 TEXTINCLUDE DISCARDABLE
BEGIN
   "1 TYPELIB ""tpcc_com_remote.tlb""\r\n"
   "\0"
END

#endif    // APSTUDIO_INVOKED


#ifndef _MAC
////////////////////////////////////////////////////////////////////////////
//
// Version
//

VS_VERSION_INFO VERSIONINFO
 FILEVERSION 1,0,0,1
 PRODUCTVERSION 1,0,0,1
 FILEFLAGSMASK 0x3fL
#ifdef _DEBUG
 FILEFLAGS 0x1L
#else
 FILEFLAGS 0x0L
#endif
 FILEOS 0x4L
 FILETYPE 0x2L
 FILESUBTYPE 0x0L
BEGIN
   BLOCK "StringFileInfo"
   BEGIN
      BLOCK "040904B0"
      BEGIN
         VALUE "CompanyName", "\0"
         VALUE "FileDescription", "tpcc_com_remote Module\0"
         VALUE "FileVersion", "1, 0, 0, 1\0"
         VALUE "InternalName", "TPCCNEWORDER\0"
         VALUE "LegalCopyright", "Copyright 1997\0"
         VALUE "OriginalFilename", "tpcc_com_remote.DLL\0"
         VALUE "ProductName", "tpcc_com_remote Module\0"
         VALUE "ProductVersion", "1, 0, 0, 1\0"
         VALUE "OLESelfRegister", "\0"
      END
   END
   BLOCK "VarFileInfo"
   BEGIN
      VALUE "Translation", 0x409, 1200
   END
END

#endif    // !_MAC


////////////////////////////////////////////////////////////////////////////
//
// REGISTRY
//
```

```
IDR_TPCCrem             REGISTRY DISCARDABLE
"tpcc_com_remote.rgs"

/////////////////////////////////////////////////////////////////////////////
//
// String Table
//

STRINGTABLE DISCARDABLE
BEGIN
   IDS_PROJNAME         "tpcc_com_remote"
END

#endif    // English (U.S.) resources
/////////////////////////////////////////////////////////////////////////////



#ifndef APSTUDIO_INVOKED
/////////////////////////////////////////////////////////////////////////////
//
// Generated from the TEXTINCLUDE 3 resource.
//
1 TYPELIB "tpcc_com_remote.tlb"

/////////////////////////////////////////////////////////////////////////////
#endif    // not APSTUDIO_INVOKED
```

tpcc_com_remote. rgs

```
HKCR
{
        TPCC.AllRemoteTxns.1 = s 'All RemoteTxns Class'
        {
                CLSID = s
'{63EC25AB-828A-4ed7-8C6C-B46D29889594}'
        }
        TPCC.AllRemoteTxns = s 'TPCC Remote Class'
        {
                CurVer = s 'TPCC.AllRemoteTxns.1'
        }
        NoRemove CLSID
        {
                ForceRemove
{63EC25AB-828A-4ed7-8C6C-B46D29889594} = s 'TPCC Remote
Class'
                {
                        ProgID = s 'TPCC.AllRemoteTxns.1'
                        VersionIndependentProgID = s
'TPCC.AllRemoteTxns'
                        InprocServer32 = s '%MODULE%'
                        {
                                val ThreadingModel = s
'Both'
                        }
                }
        }
}
```

tpcc_com_remote_i.c

```
/* this file contains the actual definitions of */
/* the IIDs and CLSIDs */

/* link this file in with the server and any clients */


/* File created by MIDL compiler version 5.01.0164 */
/* at Fri Jan 19 11:15:15 2001
 */
/* Compiler settings for .\src\tpcc_com_remote.idl:
    Oicf (OptLev=i2), W1, Zp8, env=Win32, ms_ext, c_ext
    error checks: allocation ref bounds_check enum stub_data
*/
//@@MIDL_FILE_HEADING( )
#ifdef __cplusplus
extern "C"{
#endif


#ifndef __IID_DEFINED__
#define __IID_DEFINED__

typedef struct _IID
{
    unsigned long x;
    unsigned short s1;
    unsigned short s2;
    unsigned char  c[8];
} IID;

#endif // __IID_DEFINED__

#ifndef CLSID_DEFINED
#define CLSID_DEFINED
typedef IID CLSID;
#endif // CLSID_DEFINED

const IID LIBID_TPCCremLib =
{0xB207575F,0x7A88,0x489a,{0x93,0x83,0x85,0x9E,0x2D,0x77,0x1
5,0x37}};


const CLSID CLSID_TPCCrem =
{0x63EC25AB,0x828A,0x4ed7,{0x8C,0x6C,0xB4,0x6D,0x29,0x88,0
x95,0x94}};


#ifdef __cplusplus
}
#endif
```

tpcc_com_remote_Methods.h

```
/*          FILE:               METHODS.H
 *                                      Microsoft TPC-C Kit Ver.
4.20.000
 *                                      Copyright Microsoft,
1999
 *          All Rights Reserved
 *
 *                                      not yet audited
 *
 *          PURPOSE:            Header file for COM components.
 *
 *  Change history:
 *                      4.20.000 - first version
 */


enum COMPONENT_ERROR
```

```
{
	ERR_MISSING_REGISTRY_ENTRIES= 1,
	ERR_LOADDLL_FAILED,
	ERR_GETPROCADDR_FAILED,
	ERR_UNKNOWN_DB_PROTOCOL
};

class CCOMPONENT_ERR : public CBaseErr
{
	public:
		CCOMPONENT_ERR(COMPONENT_ERROR
Err)
		{
			m_Error = Err;
			m_szTextDetail = NULL;
			m_SystemErr = 0;
			m_szErrorText = NULL;
		};

		CCOMPONENT_ERR(COMPONENT_ERROR
Err, char *szTextDetail, DWORD dwSystemErr)
		{
			m_Error = Err;
			m_szTextDetail = new
char[strlen(szTextDetail)+1];
			strcpy( m_szTextDetail, szTextDetail
);
			m_SystemErr = dwSystemErr;
			m_szErrorText = NULL;
		};

		~CCOMPONENT_ERR()
		{
			if (m_szTextDetail != NULL)
				delete [] m_szTextDetail;
			if (m_szErrorText != NULL)
				delete [] m_szErrorText;
		};

		COMPONENT_ERROR		m_Error;
		char
*m_szTextDetail;
		char
*m_szErrorText;
		DWORD			m_SystemErr;

		int ErrorType() {return
ERR_TYPE_COMPONENT;};
		int ErrorNum() {return m_Error;};
		char *ErrorText();
};


static void WriteMessageToEventLog(LPTSTR lpszMsg);


///////////////////////////////////////////////////////////////////////////
// CTPCC_Common
class CTPCC_Common_Remote :
	public ITPCCrem,
	public IObjectControl,
	public IObjectConstruct,
	public CComObjectRootEx<CComSingleThreadModel>
{
public:
BEGIN_COM_MAP(CTPCC_Common_Remote)
	COM_INTERFACE_ENTRY(ITPCCrem)
	COM_INTERFACE_ENTRY(IObjectControl)
	COM_INTERFACE_ENTRY(IObjectConstruct)
END_COM_MAP()

	CTPCC_Common_Remote();
	~CTPCC_Common_Remote();

// ITPCCrem
public:
	HRESULT __stdcall NewOrder(		VARIANT
txn_in, VARIANT* txn_out);
	HRESULT __stdcall Payment(		VARIANT
txn_in, VARIANT* txn_out);
	HRESULT __stdcall Delivery(		VARIANT
txn_in) {return E_NOTIMPL;}
	HRESULT __stdcall StockLevel(VARIANT txn_in,
VARIANT* txn_out);
	HRESULT __stdcall OrderStatus(		VARIANT
txn_in, VARIANT* txn_out);

	HRESULT __stdcall CallSetComplete();

// IObjectControl
	STDMETHODIMP_(BOOL) CanBePooled() { return
m_bCanBePooled; }
	STDMETHODIMP Activate() { return S_OK; }	//
we don't support COM Services transactions (no enlistment)
	STDMETHODIMP_(void) Deactivate() { /* nothing to do
*/ }

// IObjectConstruct
	STDMETHODIMP Construct(IDispatch * pUnk);

	// helper methods
private:
	BOOL		m_bCanBePooled;
	CTPCC_BASE	*m_pTxn;

	struct COM_DATA
	{
		int retval;
		int error;
		union
		{
			NEW_ORDER_DATA
NewOrder;
			PAYMENT_DATA
Payment;
			DELIVERY_DATA
Delivery;
			STOCK_LEVEL_DATA
StockLevel;
			ORDER_STATUS_DATA
OrderStatus;
		} u;
	};

};

///////////////////////////////////////////////////////////////////////////
// CTPCC
class CTPCCrem :
	public CTPCC_Common_Remote,
	public CComCoClass<CTPCCrem, &CLSID_TPCCrem>
{
public:
DECLARE_REGISTRY_RESOURCEID(IDR_TPCCrem)

BEGIN_COM_MAP(CTPCCrem)
```

```
        COM_INTERFACE_ENTRY2(IUnknown,
CComObjectRootEx)

COM_INTERFACE_ENTRY_CHAIN(CTPCC_Common_Remote)
END_COM_MAP()

};
```

tpcc_com_remote_ps.def

```
LIBRARY      "tpcc_com_remote_ps"

DESCRIPTION  'Proxy/Stub DLL'

EXPORTS
        DllGetClassObject     @1      PRIVATE
        DllCanUnloadNow       @2      PRIVATE
        GetProxyDllInfo       @3      PRIVATE
        DllRegisterServer             @4      PRIVATE
        DllUnregisterServer           @5      PRIVATE
```

tpcc_com_remote_ps.h

```
/* this ALWAYS GENERATED file contains the definitions for the
interfaces */


/* File created by MIDL compiler version 5.01.0164 */
/* at Fri Jan 19 11:15:07 2001
 */
/* Compiler settings for .\src\tpcc_com_remote_ps.idl:
    Oicf (OptLev=i2), W1, Zp8, env=Win32, ms_ext, c_ext
    error checks: allocation ref bounds_check enum stub_data
*/
//@@MIDL_FILE_HEADING( )


/* verify that the <rpcndr.h> version is high enough to compile this
file*/
#ifndef __REQUIRED_RPCNDR_H_VERSION__
#define __REQUIRED_RPCNDR_H_VERSION__ 440
#endif

#include "rpc.h"
#include "rpcndr.h"

#ifndef __RPCNDR_H_VERSION__
#error this stub requires an updated version of <rpcndr.h>
#endif // __RPCNDR_H_VERSION__

#ifndef COM_NO_WINDOWS_H
#include "windows.h"
#include "ole2.h"
#endif /*COM_NO_WINDOWS_H*/

#ifndef __tpcc_com_remote_ps_h__
#define __tpcc_com_remote_ps_h__

#ifdef __cplusplus
extern "C"{
#endif

/* Forward Declarations */

#ifndef __ITPCCrem_FWD_DEFINED__
#define __ITPCCrem_FWD_DEFINED__
typedef interface ITPCCrem ITPCCrem;
#endif      /* __ITPCCrem_FWD_DEFINED__ */


/* header files for imported files */
#include "oaidl.h"
#include "ocidl.h"

void __RPC_FAR * __RPC_USER MIDL_user_allocate(size_t);
void __RPC_USER MIDL_user_free( void __RPC_FAR * );

/* interface __MIDL_itf_tpcc_com_remote_ps_0000 */
/* [local] */




extern RPC_IF_HANDLE
__MIDL_itf_tpcc_com_remote_ps_0000_v0_0_c_ifspec;
extern RPC_IF_HANDLE
__MIDL_itf_tpcc_com_remote_ps_0000_v0_0_s_ifspec;

#ifndef __ITPCCrem_INTERFACE_DEFINED__
#define __ITPCCrem_INTERFACE_DEFINED__

/* interface ITPCCrem */
/* [unique][helpstring][uuid][oleautomation][object]  */


EXTERN_C const IID IID_ITPCCrem;

#if defined(__cplusplus) && !defined(CINTERFACE)


MIDL_INTERFACE("4899AD2E-D521-4d59-824A-4381438FD840")
    ITPCCrem : public IUnknown
    {
    public:
        virtual HRESULT __stdcall NewOrder(
            /* [in] */ VARIANT txn_in,
            /* [out] */ VARIANT __RPC_FAR *txn_out) = 0;

        virtual HRESULT __stdcall Payment(
            /* [in] */ VARIANT txn_in,
            /* [out] */ VARIANT __RPC_FAR *txn_out) = 0;

        virtual HRESULT __stdcall Delivery(
            /* [in] */ VARIANT txn_in) = 0;

        virtual HRESULT __stdcall StockLevel(
            /* [in] */ VARIANT txn_in,
            /* [out] */ VARIANT __RPC_FAR *txn_out) = 0;

        virtual HRESULT __stdcall OrderStatus(
            /* [in] */ VARIANT txn_in,
            /* [out] */ VARIANT __RPC_FAR *txn_out) = 0;

        virtual HRESULT __stdcall CallSetComplete( void) = 0;

    };

#else       /* C style interface */

    typedef struct ITPCCremVtbl
    {
        BEGIN_INTERFACE
```

```
        HRESULT ( STDMETHODCALLTYPE __RPC_FAR
*QueryInterface )(
            ITPCCrem __RPC_FAR * This,
            /* [in] */ REFIID riid,
            /* [iid_is][out] */ void __RPC_FAR *__RPC_FAR
*ppvObject);

        ULONG ( STDMETHODCALLTYPE __RPC_FAR *AddRef )(
            ITPCCrem __RPC_FAR * This);

        ULONG ( STDMETHODCALLTYPE __RPC_FAR *Release )(
            ITPCCrem __RPC_FAR * This);

        HRESULT ( __stdcall __RPC_FAR *NewOrder )(
            ITPCCrem __RPC_FAR * This,
            /* [in] */ VARIANT txn_in,
            /* [out] */ VARIANT __RPC_FAR *txn_out);

        HRESULT ( __stdcall __RPC_FAR *Payment )(
            ITPCCrem __RPC_FAR * This,
            /* [in] */ VARIANT txn_in,
            /* [out] */ VARIANT __RPC_FAR *txn_out);

        HRESULT ( __stdcall __RPC_FAR *Delivery )(
            ITPCCrem __RPC_FAR * This,
            /* [in] */ VARIANT txn_in);

        HRESULT ( __stdcall __RPC_FAR *StockLevel )(
            ITPCCrem __RPC_FAR * This,
            /* [in] */ VARIANT txn_in,
            /* [out] */ VARIANT __RPC_FAR *txn_out);

        HRESULT ( __stdcall __RPC_FAR *OrderStatus )(
            ITPCCrem __RPC_FAR * This,
            /* [in] */ VARIANT txn_in,
            /* [out] */ VARIANT __RPC_FAR *txn_out);

        HRESULT ( __stdcall __RPC_FAR *CallSetComplete )(
            ITPCCrem __RPC_FAR * This);

        END_INTERFACE
    } ITPCCremVtbl;

    interface ITPCCrem
    {
        CONST_VTBL struct ITPCCremVtbl __RPC_FAR *lpVtbl;
    };



#ifdef COBJMACROS


#define ITPCCrem_QueryInterface(This,riid,ppvObject)            \
    (This)->lpVtbl -> QueryInterface(This,riid,ppvObject)

#define ITPCCrem_AddRef(This)           \
    (This)->lpVtbl -> AddRef(This)

#define ITPCCrem_Release(This)          \
    (This)->lpVtbl -> Release(This)


#define ITPCCrem_NewOrder(This,txn_in,txn_out)      \
    (This)->lpVtbl -> NewOrder(This,txn_in,txn_out)

#define ITPCCrem_Payment(This,txn_in,txn_out)       \
    (This)->lpVtbl -> Payment(This,txn_in,txn_out)

#define ITPCCrem_Delivery(This,txn_in)    \
    (This)->lpVtbl -> Delivery(This,txn_in)

#define ITPCCrem_StockLevel(This,txn_in,txn_out)    \
    (This)->lpVtbl -> StockLevel(This,txn_in,txn_out)

#define ITPCCrem_OrderStatus(This,txn_in,txn_out)   \
    (This)->lpVtbl -> OrderStatus(This,txn_in,txn_out)

#define ITPCCrem_CallSetComplete(This)  \
    (This)->lpVtbl -> CallSetComplete(This)

#endif /* COBJMACROS */


#endif      /* C style interface */



HRESULT __stdcall ITPCCrem_NewOrder_Proxy(
    ITPCCrem __RPC_FAR * This,
    /* [in] */ VARIANT txn_in,
    /* [out] */ VARIANT __RPC_FAR *txn_out);


void __RPC_STUB ITPCCrem_NewOrder_Stub(
    IRpcStubBuffer *This,
    IRpcChannelBuffer *_pRpcChannelBuffer,
    PRPC_MESSAGE _pRpcMessage,
    DWORD *_pdwStubPhase);


HRESULT __stdcall ITPCCrem_Payment_Proxy(
    ITPCCrem __RPC_FAR * This,
    /* [in] */ VARIANT txn_in,
    /* [out] */ VARIANT __RPC_FAR *txn_out);


void __RPC_STUB ITPCCrem_Payment_Stub(
    IRpcStubBuffer *This,
    IRpcChannelBuffer *_pRpcChannelBuffer,
    PRPC_MESSAGE _pRpcMessage,
    DWORD *_pdwStubPhase);


HRESULT __stdcall ITPCCrem_Delivery_Proxy(
    ITPCCrem __RPC_FAR * This,
    /* [in] */ VARIANT txn_in);


void __RPC_STUB ITPCCrem_Delivery_Stub(
    IRpcStubBuffer *This,
    IRpcChannelBuffer *_pRpcChannelBuffer,
    PRPC_MESSAGE _pRpcMessage,
    DWORD *_pdwStubPhase);


HRESULT __stdcall ITPCCrem_StockLevel_Proxy(
    ITPCCrem __RPC_FAR * This,
    /* [in] */ VARIANT txn_in,
    /* [out] */ VARIANT __RPC_FAR *txn_out);


void __RPC_STUB ITPCCrem_StockLevel_Stub(
    IRpcStubBuffer *This,
    IRpcChannelBuffer *_pRpcChannelBuffer,
    PRPC_MESSAGE _pRpcMessage,
```

```
    DWORD *_pdwStubPhase);


HRESULT __stdcall ITPCCrem_OrderStatus_Proxy(
    ITPCCrem __RPC_FAR * This,
    /* [in] */ VARIANT txn_in,
    /* [out] */ VARIANT __RPC_FAR *txn_out);


void __RPC_STUB ITPCCrem_OrderStatus_Stub(
    IRpcStubBuffer *This,
    IRpcChannelBuffer *_pRpcChannelBuffer,
    PRPC_MESSAGE _pRpcMessage,
    DWORD *_pdwStubPhase);


HRESULT __stdcall ITPCCrem_CallSetComplete_Proxy(
    ITPCCrem __RPC_FAR * This);


void __RPC_STUB ITPCCrem_CallSetComplete_Stub(
    IRpcStubBuffer *This,
    IRpcChannelBuffer *_pRpcChannelBuffer,
    PRPC_MESSAGE _pRpcMessage,
    DWORD *_pdwStubPhase);



#endif      /* __ITPCCrem_INTERFACE_DEFINED__ */


/* Additional Prototypes for ALL interfaces */

unsigned long           __RPC_USER  VARIANT_UserSize(
unsigned long __RPC_FAR *, unsigned long           , VARIANT
__RPC_FAR * );
unsigned char __RPC_FAR * __RPC_USER
VARIANT_UserMarshal(  unsigned long __RPC_FAR *, unsigned
char __RPC_FAR *, VARIANT __RPC_FAR * );
unsigned char __RPC_FAR * __RPC_USER
VARIANT_UserUnmarshal(unsigned long __RPC_FAR *, unsigned
char __RPC_FAR *, VARIANT __RPC_FAR * );
void                __RPC_USER  VARIANT_UserFree(    unsigned
long __RPC_FAR *, VARIANT __RPC_FAR * );

/* end of Additional Prototypes */

#ifdef __cplusplus
}
#endif

#endif
```

tpcc_com_remote_ps.idl

```
/*          FILE:                   ITPCC.IDL
 *                                          Microsoft TPC-C Kit Ver.
4.20.000
 *                                          Copyright Microsoft,
1999
 *          All Rights Reserved
 *
 *                                          not yet audited
 *
 *          PURPOSE:                Defines the interface used by TPCC.
This interface can be implemented by C++ components.
 *
 *  Change history:
 *                      4.20.000 - first version
 */

// Forward declare all types defined
interface ITPCCrem;
import "oaidl.idl";
import "ocidl.idl";

        [
                object,
                oleautomation,

uuid(4899AD2E-D521-4d59-824A-4381438FD840),
                helpstring("ITPCC Interface"),
                pointer_default(unique)
        ]
        interface ITPCCrem : IUnknown
        {

    HRESULT _stdcall NewOrder
                                                (
                                                [in]
VARIANT  txn_in,

[out] VARIANT *txn_out
                                                );

    HRESULT _stdcall Payment
                                                (
                                                [in]
VARIANT txn_in,

[out] VARIANT *txn_out
                                                );

    HRESULT _stdcall Delivery
                                                (
                                                [in]
VARIANT txn_in
                                                );

    HRESULT _stdcall StockLevel
                                                (
                                                [in]
VARIANT txn_in,

[out] VARIANT *txn_out
                                                );

    HRESULT _stdcall OrderStatus
                                                (
                                                [in]
VARIANT txn_in,

[out] VARIANT *txn_out
                                                );

    HRESULT _stdcall CallSetComplete
                                                (
                                                );


  };        // interface ITPCC
```

tpcc_com_remote_ps_i.c

```
/* this file contains the actual definitions of */
/* the IIDs and CLSIDs */

/* link this file in with the server and any clients */


/* File created by MIDL compiler version 5.01.0164 */
/* at Fri Jan 19 11:15:07 2001
 */
/* Compiler settings for .\src\tpcc_com_remote_ps.idl:
    Oicf (OptLev=i2), W1, Zp8, env=Win32, ms_ext, c_ext
    error checks: allocation ref bounds_check enum stub_data
*/
//@@MIDL_FILE_HEADING( )
#ifdef __cplusplus
extern "C"{
#endif


#ifndef __IID_DEFINED__
#define __IID_DEFINED__

typedef struct _IID
{
    unsigned long x;
    unsigned short s1;
    unsigned short s2;
    unsigned char  c[8];
} IID;

#endif // __IID_DEFINED__

#ifndef CLSID_DEFINED
#define CLSID_DEFINED
typedef IID CLSID;
#endif // CLSID_DEFINED

const IID IID_ITPCCrem =
{0x4899AD2E,0xD521,0x4d59,{0x82,0x4A,0x43,0x81,0x43,0x8F,0x
D8,0x40}};


#ifdef __cplusplus
}
#endif
```

tpcc_com_remote_ps_p.c

```
/* this ALWAYS GENERATED file contains the proxy stub code */


/* File created by MIDL compiler version 5.01.0164 */
/* at Fri Jan 19 11:15:07 2001
 */
/* Compiler settings for .\src\tpcc_com_remote_ps.idl:
    Oicf (OptLev=i2), W1, Zp8, env=Win32, ms_ext, c_ext
    error checks: allocation ref bounds_check enum stub_data
*/
//@@MIDL_FILE_HEADING( )

#define USE_STUBLESS_PROXY


/* verify that the <rpcproxy.h> version is high enough to compile this
file*/
#ifndef __REDQ_RPCPROXY_H_VERSION__
#define __REQUIRED_RPCPROXY_H_VERSION__ 440
#endif


#include "rpcproxy.h"
#ifndef __RPCPROXY_H_VERSION__
#error this stub requires an updated version of <rpcproxy.h>
#endif // __RPCPROXY_H_VERSION__


#include "tpcc_com_remote_ps.h"

#define TYPE_FORMAT_STRING_SIZE  997
#define PROC_FORMAT_STRING_SIZE  187

typedef struct _MIDL_TYPE_FORMAT_STRING
    {
    short          Pad;
    unsigned char  Format[ TYPE_FORMAT_STRING_SIZE ];
    } MIDL_TYPE_FORMAT_STRING;

typedef struct _MIDL_PROC_FORMAT_STRING
    {
    short          Pad;
    unsigned char  Format[ PROC_FORMAT_STRING_SIZE ];
    } MIDL_PROC_FORMAT_STRING;


extern const MIDL_TYPE_FORMAT_STRING
__MIDL_TypeFormatString;
extern const MIDL_PROC_FORMAT_STRING
__MIDL_ProcFormatString;


/* Standard interface: __MIDL_itf_tpcc_com_remote_ps_0000, ver.
0.0,

GUID={0x00000000,0x0000,0x0000,{0x00,0x00,0x00,0x00,0x00,0x
00,0x00,0x00}} */


/* Object interface: IUnknown, ver. 0.0,

GUID={0x00000000,0x0000,0x0000,{0xC0,0x00,0x00,0x00,0x00,0x
00,0x00,0x46}} */


/* Object interface: ITPCCrem, ver. 0.0,

GUID={0x4899AD2E,0xD521,0x4d59,{0x82,0x4A,0x43,0x81,0x43,0
x8F,0xD8,0x40}} */


extern const MIDL_STUB_DESC Object_StubDesc;


extern const MIDL_SERVER_INFO ITPCCrem_ServerInfo;

#pragma code_seg(".orpc")
extern const USER_MARSHAL_ROUTINE_QUADRUPLE
UserMarshalRoutines[1];

static const MIDL_STUB_DESC Object_StubDesc =
    {
    0,
    NdrOleAllocate,
    NdrOleFree,
    0,
```

```
    0,
    0,
    0,
    0,
    __MIDL_TypeFormatString.Format,
    1, /* -error bounds_check flag */
    0x20000, /* Ndr library version */
    0,
    0x50100a4, /* MIDL Version 5.1.164 */
    0,
    UserMarshalRoutines,
    0,  /* notify & notify_flag routine table */
    1,  /* Flags */
    0,  /* Reserved3 */
    0,  /* Reserved4 */
    0   /* Reserved5 */
    };

static const unsigned short ITPCCrem_FormatStringOffsetTable[] =
    {
    0,
    34,
    68,
    96,
    130,
    164
    };

static const MIDL_SERVER_INFO ITPCCrem_ServerInfo =
    {
    &Object_StubDesc,
    0,
    __MIDL_ProcFormatString.Format,
    &ITPCCrem_FormatStringOffsetTable[-3],
    0,
    0,
    0,
    0
    };

static const MIDL_STUBLESS_PROXY_INFO ITPCCrem_ProxyInfo
=
    {
    &Object_StubDesc,
    __MIDL_ProcFormatString.Format,
    &ITPCCrem_FormatStringOffsetTable[-3],
    0,
    0,
    0
    };

CINTERFACE_PROXY_VTABLE(9) _ITPCCremProxyVtbl =
{
    &ITPCCrem_ProxyInfo,
    &IID_ITPCCrem,
    IUnknown_QueryInterface_Proxy,
    IUnknown_AddRef_Proxy,
    IUnknown_Release_Proxy ,
    (void *)-1 /* ITPCCrem::NewOrder */ ,
    (void *)-1 /* ITPCCrem::Payment */ ,
    (void *)-1 /* ITPCCrem::Delivery */ ,
    (void *)-1 /* ITPCCrem::StockLevel */ ,
    (void *)-1 /* ITPCCrem::OrderStatus */ ,
    (void *)-1 /* ITPCCrem::CallSetComplete */
};

const CInterfaceStubVtbl _ITPCCremStubVtbl =
{
    &IID_ITPCCrem,
    &ITPCCrem_ServerInfo,
    9,
    0, /* pure interpreted */
    CStdStubBuffer_METHODS
};

#pragma data_seg(".rdata")

static const USER_MARSHAL_ROUTINE_QUADRUPLE
UserMarshalRoutines[1] =
        {

            {
            VARIANT_UserSize
            ,VARIANT_UserMarshal
            ,VARIANT_UserUnmarshal
            ,VARIANT_UserFree
            }

        };


#if !defined(__RPC_WIN32__)
#error  Invalid build platform for this stub.
#endif

#if !(TARGET_IS_NT40_OR_LATER)
#error You need a Windows NT 4.0 or later to run this stub because it
uses these features:
#error   -Oif or -Oicf, [wire_marshal] or [user_marshal] attribute, more
than 32 methods in the interface.
#error However, your C/C++ compilation flags indicate you intend to
run this app on earlier systems.
#error This app will die there with the
RPC_X_WRONG_STUB_VERSION error.
#endif


static const MIDL_PROC_FORMAT_STRING
__MIDL_ProcFormatString =
    {
        0,
        {

            /* Procedure NewOrder */

                                    0x33,               /*
FC_AUTO_HANDLE */
                                    0x6c,               /* Old Flags:
object, Oi2 */
/*  2 */    NdrFcLong( 0x0 ),   /* 0 */
/*  6 */    NdrFcShort( 0x3 ),  /* 3 */
#ifndef _ALPHA_
#if !defined(_MIPS_) && !defined(_PPC_)
/*  8 */    NdrFcShort( 0x1c ), /* x86 Stack size/offset = 28 */
#else
                                    NdrFcShort( 0x20 ), /* MIPS &
PPC Stack size/offset = 32 */
#endif
#else
                                    NdrFcShort( 0x28 ), /* Alpha Stack
size/offset = 40 */
#endif
/* 10 */    NdrFcShort( 0x0 ),  /* 0 */
/* 12 */    NdrFcShort( 0x8 ),  /* 8 */
/* 14 */    0x7,                /* Oi2 Flags:  srv must size, clt must
size, has return, */
```

```
                                0x3,                    /* 3 */

            /* Parameter txn_in */

/* 16 */    NdrFcShort( 0x8b ),   /* Flags:  must size, must free, in, by
val, */
#ifndef _ALPHA_
#if !defined(_MIPS_) && !defined(_PPC_)
/* 18 */    NdrFcShort( 0x4 ),    /* x86 Stack size/offset = 4 */
#else
                                NdrFcShort( 0x8 ),    /* MIPS &
PPC Stack size/offset = 8 */
#endif
#else
                                NdrFcShort( 0x8 ),    /* Alpha Stack
size/offset = 8 */
#endif
/* 20 */    NdrFcShort( 0x3c8 ), /* Type Offset=968 */

            /* Parameter txn_out */

/* 22 */    NdrFcShort( 0x4113 ),           /* Flags:  must size, must
free, out, simple ref, srv alloc size=16 */
#ifndef _ALPHA_
#if !defined(_MIPS_) && !defined(_PPC_)
/* 24 */    NdrFcShort( 0x14 ),   /* x86 Stack size/offset = 20 */
#else
                                NdrFcShort( 0x18 ),   /* MIPS &
PPC Stack size/offset = 24 */
#endif
#else
                                NdrFcShort( 0x18 ),   /* Alpha Stack
size/offset = 24 */
#endif
/* 26 */    NdrFcShort( 0x3da ), /* Type Offset=986 */

            /* Return value */

/* 28 */    NdrFcShort( 0x70 ),   /* Flags:  out, return, base type, */
#ifndef _ALPHA_
#if !defined(_MIPS_) && !defined(_PPC_)
/* 30 */    NdrFcShort( 0x18 ),   /* x86 Stack size/offset = 24 */
#else
                                NdrFcShort( 0x1c ),   /* MIPS &
PPC Stack size/offset = 28 */
#endif
#else
                                NdrFcShort( 0x20 ),   /* Alpha Stack
size/offset = 32 */
#endif
/* 32 */    0x8,                    /* FC_LONG */
                                0x0,                    /* 0 */

            /* Procedure Payment */

/* 34 */    0x33,                   /* FC_AUTO_HANDLE */
                                0x6c,                   /* Old Flags:
object, Oi2 */
/* 36 */    NdrFcLong( 0x0 ),     /* 0 */
/* 40 */    NdrFcShort( 0x4 ),    /* 4 */
#ifndef _ALPHA_
#if !defined(_MIPS_) && !defined(_PPC_)
/* 42 */    NdrFcShort( 0x1c ),   /* x86 Stack size/offset = 28 */
#else
                                NdrFcShort( 0x20 ),   /* MIPS &
PPC Stack size/offset = 32 */
#endif
#else
                                NdrFcShort( 0x28 ),   /* Alpha Stack
size/offset = 40 */
#endif
/* 44 */    NdrFcShort( 0x0 ),    /* 0 */
/* 46 */    NdrFcShort( 0x8 ),    /* 8 */
/* 48 */    0x7,                    /* Oi2 Flags:  srv must size, clt must
size, has return, */
                                0x3,                    /* 3 */

            /* Parameter txn_in */

/* 50 */    NdrFcShort( 0x8b ),   /* Flags:  must size, must free, in, by
val, */
#ifndef _ALPHA_
#if !defined(_MIPS_) && !defined(_PPC_)
/* 52 */    NdrFcShort( 0x4 ),    /* x86 Stack size/offset = 4 */
#else
                                NdrFcShort( 0x8 ),    /* MIPS &
PPC Stack size/offset = 8 */
#endif
#else
                                NdrFcShort( 0x8 ),    /* Alpha Stack
size/offset = 8 */
#endif
/* 54 */    NdrFcShort( 0x3c8 ), /* Type Offset=968 */

            /* Parameter txn_out */

/* 56 */    NdrFcShort( 0x4113 ),           /* Flags:  must size, must
free, out, simple ref, srv alloc size=16 */
#ifndef _ALPHA_
#if !defined(_MIPS_) && !defined(_PPC_)
/* 58 */    NdrFcShort( 0x14 ),   /* x86 Stack size/offset = 20 */
#else
                                NdrFcShort( 0x18 ),   /* MIPS &
PPC Stack size/offset = 24 */
#endif
#else
                                NdrFcShort( 0x18 ),   /* Alpha Stack
size/offset = 24 */
#endif
/* 60 */    NdrFcShort( 0x3da ), /* Type Offset=986 */

            /* Return value */

/* 62 */    NdrFcShort( 0x70 ),   /* Flags:  out, return, base type, */
#ifndef _ALPHA_
#if !defined(_MIPS_) && !defined(_PPC_)
/* 64 */    NdrFcShort( 0x18 ),   /* x86 Stack size/offset = 24 */
#else
                                NdrFcShort( 0x1c ),   /* MIPS &
PPC Stack size/offset = 28 */
#endif
#else
                                NdrFcShort( 0x20 ),   /* Alpha Stack
size/offset = 32 */
#endif
/* 66 */    0x8,                    /* FC_LONG */
                                0x0,                    /* 0 */

            /* Procedure Delivery */

/* 68 */    0x33,                   /* FC_AUTO_HANDLE */
                                0x6c,                   /* Old Flags:
object, Oi2 */
/* 70 */    NdrFcLong( 0x0 ),     /* 0 */
/* 74 */    NdrFcShort( 0x5 ),    /* 5 */
#ifndef _ALPHA_
```

```
#if !defined(_MIPS_) && !defined(_PPC_)
/* 76 */    NdrFcShort( 0x18 ),   /* x86 Stack size/offset = 24 */
#else
                                  NdrFcShort( 0x1c ),   /* MIPS &
PPC Stack size/offset = 28 */
#endif
#else
                                  NdrFcShort( 0x20 ),   /* Alpha Stack
size/offset = 32 */
#endif
/* 78 */    NdrFcShort( 0x0 ),    /* 0 */
/* 80 */    NdrFcShort( 0x8 ),    /* 8 */
/* 82 */    0x6,                  /* Oi2 Flags:  clt must size, has
return, */
                                  0x2,                  /* 2 */

            /* Parameter txn_in */

/* 84 */    NdrFcShort( 0x8b ),   /* Flags:  must size, must free, in, by
val, */
#ifndef _ALPHA_
#if !defined(_MIPS_) && !defined(_PPC_)
/* 86 */    NdrFcShort( 0x4 ),    /* x86 Stack size/offset = 4 */
#else
                                  NdrFcShort( 0x8 ),    /* MIPS &
PPC Stack size/offset = 8 */
#endif
#else
                                  NdrFcShort( 0x8 ),    /* Alpha Stack
size/offset = 8 */
#endif
/* 88 */    NdrFcShort( 0x3c8 ), /* Type Offset=968 */

            /* Return value */

/* 90 */    NdrFcShort( 0x70 ),   /* Flags:  out, return, base type, */
#ifndef _ALPHA_
#if !defined(_MIPS_) && !defined(_PPC_)
/* 92 */    NdrFcShort( 0x14 ),   /* x86 Stack size/offset = 20 */
#else
                                  NdrFcShort( 0x18 ),   /* MIPS &
PPC Stack size/offset = 24 */
#endif
#else
                                  NdrFcShort( 0x18 ),   /* Alpha Stack
size/offset = 24 */
#endif
/* 94 */    0x8,                  /* FC_LONG */
                                  0x0,                  /* 0 */

            /* Procedure StockLevel */

/* 96 */    0x33,                 /* FC_AUTO_HANDLE */
                                  0x6c,                 /* Old Flags:
object, Oi2 */
/* 98 */    NdrFcLong( 0x0 ),     /* 0 */
/* 102 */   NdrFcShort( 0x6 ),    /* 6 */
#ifndef _ALPHA_
#if !defined(_MIPS_) && !defined(_PPC_)
/* 104 */   NdrFcShort( 0x1c ),   /* x86 Stack size/offset = 28 */
#else
                                  NdrFcShort( 0x20 ),   /* MIPS &
PPC Stack size/offset = 32 */
#endif
#else
                                  NdrFcShort( 0x28 ),   /* Alpha Stack
size/offset = 40 */
#endif
/* 106 */   NdrFcShort( 0x0 ),    /* 0 */
/* 108 */   NdrFcShort( 0x8 ),    /* 8 */
/* 110 */   0x7,                  /* Oi2 Flags:  srv must size, clt must
size, has return, */
                                  0x3,                  /* 3 */

            /* Parameter txn_in */

/* 112 */   NdrFcShort( 0x8b ),   /* Flags:  must size, must free, in, by
val, */
#ifndef _ALPHA_
#if !defined(_MIPS_) && !defined(_PPC_)
/* 114 */   NdrFcShort( 0x4 ),    /* x86 Stack size/offset = 4 */
#else
                                  NdrFcShort( 0x8 ),    /* MIPS &
PPC Stack size/offset = 8 */
#endif
#else
                                  NdrFcShort( 0x8 ),    /* Alpha Stack
size/offset = 8 */
#endif
/* 116 */   NdrFcShort( 0x3c8 ), /* Type Offset=968 */

            /* Parameter txn_out */

/* 118 */   NdrFcShort( 0x4113 ),             /* Flags:  must size, must
free, out, simple ref, srv alloc size=16 */
#ifndef _ALPHA_
#if !defined(_MIPS_) && !defined(_PPC_)
/* 120 */   NdrFcShort( 0x14 ),   /* x86 Stack size/offset = 20 */
#else
                                  NdrFcShort( 0x18 ),   /* MIPS &
PPC Stack size/offset = 24 */
#endif
#else
                                  NdrFcShort( 0x18 ),   /* Alpha Stack
size/offset = 24 */
#endif
/* 122 */   NdrFcShort( 0x3da ), /* Type Offset=986 */

            /* Return value */

/* 124 */   NdrFcShort( 0x70 ),   /* Flags:  out, return, base type, */
#ifndef _ALPHA_
#if !defined(_MIPS_) && !defined(_PPC_)
/* 126 */   NdrFcShort( 0x18 ),   /* x86 Stack size/offset = 24 */
#else
                                  NdrFcShort( 0x1c ),   /* MIPS &
PPC Stack size/offset = 28 */
#endif
#else
                                  NdrFcShort( 0x20 ),   /* Alpha Stack
size/offset = 32 */
#endif
/* 128 */   0x8,                  /* FC_LONG */
                                  0x0,                  /* 0 */

            /* Procedure OrderStatus */

/* 130 */   0x33,                 /* FC_AUTO_HANDLE */
                                  0x6c,                 /* Old Flags:
object, Oi2 */
/* 132 */   NdrFcLong( 0x0 ),     /* 0 */
/* 136 */   NdrFcShort( 0x7 ),    /* 7 */
#ifndef _ALPHA_
#if !defined(_MIPS_) && !defined(_PPC_)
/* 138 */   NdrFcShort( 0x1c ),   /* x86 Stack size/offset = 28 */
#else
```

```
                                NdrFcShort( 0x20 ),   /* MIPS &
PPC Stack size/offset = 32 */
#endif
#else
                                NdrFcShort( 0x28 ),   /* Alpha Stack
size/offset = 40 */
#endif
/* 140 */   NdrFcShort( 0x0 ),    /* 0 */
/* 142 */   NdrFcShort( 0x8 ),    /* 8 */
/* 144 */   0x7,                  /* Oi2 Flags:  srv must size, clt must
size, has return, */
                                0x3,                  /* 3 */

            /* Parameter txn_in */

/* 146 */   NdrFcShort( 0x8b ),   /* Flags:  must size, must free, in, by
val, */
#ifndef _ALPHA_
#if !defined(_MIPS_) && !defined(_PPC_)
/* 148 */   NdrFcShort( 0x4 ),    /* x86 Stack size/offset = 4 */
#else
                                NdrFcShort( 0x8 ),    /* MIPS &
PPC Stack size/offset = 8 */
#endif
#else
                                NdrFcShort( 0x8 ),    /* Alpha Stack
size/offset = 8 */
#endif
/* 150 */   NdrFcShort( 0x3c8 ), /* Type Offset=968 */

            /* Parameter txn_out */

/* 152 */   NdrFcShort( 0x4113 ),             /* Flags:  must size, must
free, out, simple ref, srv alloc size=16 */
#ifndef _ALPHA_
#if !defined(_MIPS_) && !defined(_PPC_)
/* 154 */   NdrFcShort( 0x14 ),   /* x86 Stack size/offset = 20 */
#else
                                NdrFcShort( 0x18 ),   /* MIPS &
PPC Stack size/offset = 24 */
#endif
#else
                                NdrFcShort( 0x18 ),   /* Alpha Stack
size/offset = 24 */
#endif
/* 156 */   NdrFcShort( 0x3da ), /* Type Offset=986 */

            /* Return value */

/* 158 */   NdrFcShort( 0x70 ),   /* Flags:  out, return, base type, */
#ifndef _ALPHA_
#if !defined(_MIPS_) && !defined(_PPC_)
/* 160 */   NdrFcShort( 0x18 ),   /* x86 Stack size/offset = 24 */
#else
                                NdrFcShort( 0x1c ),   /* MIPS &
PPC Stack size/offset = 28 */
#endif
#else
                                NdrFcShort( 0x20 ),   /* Alpha Stack
size/offset = 32 */
#endif
/* 162 */   0x8,                  /* FC_LONG */
                                0x0,                  /* 0 */

            /* Procedure CallSetComplete */

/* 164 */   0x33,                 /* FC_AUTO_HANDLE */
                                0x6c,                 /* Old Flags:
object, Oi2 */
/* 166 */   NdrFcLong( 0x0 ),     /* 0 */
/* 170 */   NdrFcShort( 0x8 ),    /* 8 */
#ifndef _ALPHA_
/* 172 */   NdrFcShort( 0x8 ),    /* x86, MIPS, PPC Stack size/offset
= 8 */
#else
                                NdrFcShort( 0x10 ),   /* Alpha Stack
size/offset = 16 */
#endif
/* 174 */   NdrFcShort( 0x0 ),    /* 0 */
/* 176 */   NdrFcShort( 0x8 ),    /* 8 */
/* 178 */   0x4,                  /* Oi2 Flags:  has return, */
                                0x1,                  /* 1 */

            /* Return value */

/* 180 */   NdrFcShort( 0x70 ),   /* Flags:  out, return, base type, */
#ifndef _ALPHA_
/* 182 */   NdrFcShort( 0x4 ),    /* x86, MIPS, PPC Stack size/offset
= 4 */
#else
                                NdrFcShort( 0x8 ),    /* Alpha Stack
size/offset = 8 */
#endif
/* 184 */   0x8,                  /* FC_LONG */
                                0x0,                  /* 0 */

                                0x0
    }
  };

static const MIDL_TYPE_FORMAT_STRING
__MIDL_TypeFormatString =
  {
    0,
    {
                                NdrFcShort( 0x0 ),    /* 0 */
/*  2 */
                                0x12, 0x0, /* FC_UP */
/*  4 */    NdrFcShort( 0x3b0 ), /* Offset= 944 (948) */
/*  6 */
                                0x2b,                 /*
FC_NON_ENCAPSULATED_UNION */
                                0x9,                  /* FC_ULONG
*/
/*  8 */    0x7,                  /* Corr desc: FC_USHORT */
                                0x0,                  /*  */
/* 10 */    NdrFcShort( 0xfff8 ), /* -8 */
/* 12 */    NdrFcShort( 0x2 ),    /* Offset= 2 (14) */
/* 14 */    NdrFcShort( 0x10 ),   /* 16 */
/* 16 */    NdrFcShort( 0x2b ),   /* 43 */
/* 18 */    NdrFcLong( 0x3 ),     /* 3 */
/* 22 */    NdrFcShort( 0x8008 ),             /* Simple arm type:
FC_LONG */
/* 24 */    NdrFcLong( 0x11 ),    /* 17 */
/* 28 */    NdrFcShort( 0x8001 ),             /* Simple arm type:
FC_BYTE */
/* 30 */    NdrFcLong( 0x2 ),     /* 2 */
/* 34 */    NdrFcShort( 0x8006 ),             /* Simple arm type:
FC_SHORT */
/* 36 */    NdrFcLong( 0x4 ),     /* 4 */
/* 40 */    NdrFcShort( 0x800a ),             /* Simple arm type:
FC_FLOAT */
/* 42 */    NdrFcLong( 0x5 ),     /* 5 */
/* 46 */    NdrFcShort( 0x800c ),             /* Simple arm type:
FC_DOUBLE */
```

```
/* 48 */     NdrFcLong( 0xb ),     /* 11 */
/* 52 */     NdrFcShort( 0x8006 ),             /* Simple arm type:
FC_SHORT */
/* 54 */     NdrFcLong( 0xa ),     /* 10 */
/* 58 */     NdrFcShort( 0x8008 ),             /* Simple arm type:
FC_LONG */
/* 60 */     NdrFcLong( 0x6 ),     /* 6 */
/* 64 */     NdrFcShort( 0xd6 ),   /* Offset= 214 (278) */
/* 66 */     NdrFcLong( 0x7 ),     /* 7 */
/* 70 */     NdrFcShort( 0x800c ),             /* Simple arm type:
FC_DOUBLE */
/* 72 */     NdrFcLong( 0x8 ),     /* 8 */
/* 76 */     NdrFcShort( 0xd0 ),   /* Offset= 208 (284) */
/* 78 */     NdrFcLong( 0xd ),     /* 13 */
/* 82 */     NdrFcShort( 0xe2 ),   /* Offset= 226 (308) */
/* 84 */     NdrFcLong( 0x9 ),     /* 9 */
/* 88 */     NdrFcShort( 0xee ),   /* Offset= 238 (326) */
/* 90 */     NdrFcLong( 0x2000 ),              /* 8192 */
/* 94 */     NdrFcShort( 0xfa ),   /* Offset= 250 (344) */
/* 96 */     NdrFcLong( 0x24 ),    /* 36 */
/* 100 */    NdrFcShort( 0x308 ), /* Offset= 776 (876) */
/* 102 */    NdrFcLong( 0x4024 ),              /* 16420 */
/* 106 */    NdrFcShort( 0x302 ), /* Offset= 770 (876) */
/* 108 */    NdrFcLong( 0x4011 ),              /* 16401 */
/* 112 */    NdrFcShort( 0x300 ), /* Offset= 768 (880) */
/* 114 */    NdrFcLong( 0x4002 ),              /* 16386 */
/* 118 */    NdrFcShort( 0x2fe ),  /* Offset= 766 (884) */
/* 120 */    NdrFcLong( 0x4003 ),              /* 16387 */
/* 124 */    NdrFcShort( 0x2fc ),  /* Offset= 764 (888) */
/* 126 */    NdrFcLong( 0x4004 ),              /* 16388 */
/* 130 */    NdrFcShort( 0x2fa ),  /* Offset= 762 (892) */
/* 132 */    NdrFcLong( 0x4005 ),              /* 16389 */
/* 136 */    NdrFcShort( 0x2f8 ),  /* Offset= 760 (896) */
/* 138 */    NdrFcLong( 0x400b ),              /* 16395 */
/* 142 */    NdrFcShort( 0x2e6 ),  /* Offset= 742 (884) */
/* 144 */    NdrFcLong( 0x400a ),              /* 16394 */
/* 148 */    NdrFcShort( 0x2e4 ),  /* Offset= 740 (888) */
/* 150 */    NdrFcLong( 0x4006 ),              /* 16390 */
/* 154 */    NdrFcShort( 0x2ea ),  /* Offset= 746 (900) */
/* 156 */    NdrFcLong( 0x4007 ),              /* 16391 */
/* 160 */    NdrFcShort( 0x2e0 ),  /* Offset= 736 (896) */
/* 162 */    NdrFcLong( 0x4008 ),              /* 16392 */
/* 166 */    NdrFcShort( 0x2e2 ),  /* Offset= 738 (904) */
/* 168 */    NdrFcLong( 0x400d ),              /* 16397 */
/* 172 */    NdrFcShort( 0x2e0 ),  /* Offset= 736 (908) */
/* 174 */    NdrFcLong( 0x4009 ),              /* 16393 */
/* 178 */    NdrFcShort( 0x2de ),  /* Offset= 734 (912) */
/* 180 */    NdrFcLong( 0x6000 ),              /* 24576 */
/* 184 */    NdrFcShort( 0x2dc ),  /* Offset= 732 (916) */
/* 186 */    NdrFcLong( 0x400c ),              /* 16396 */
/* 190 */    NdrFcShort( 0x2da ),  /* Offset= 730 (920) */
/* 192 */    NdrFcLong( 0x10 ),    /* 16 */
/* 196 */    NdrFcShort( 0x8002 ),             /* Simple arm type:
FC_CHAR */
/* 198 */    NdrFcLong( 0x12 ),    /* 18 */
/* 202 */    NdrFcShort( 0x8006 ),             /* Simple arm type:
FC_SHORT */
/* 204 */    NdrFcLong( 0x13 ),    /* 19 */
/* 208 */    NdrFcShort( 0x8008 ),             /* Simple arm type:
FC_LONG */
/* 210 */    NdrFcLong( 0x16 ),    /* 22 */
/* 214 */    NdrFcShort( 0x8008 ),             /* Simple arm type:
FC_LONG */
/* 216 */    NdrFcLong( 0x17 ),    /* 23 */
/* 220 */    NdrFcShort( 0x8008 ),             /* Simple arm type:
FC_LONG */
/* 222 */    NdrFcLong( 0xe ),     /* 14 */
/* 226 */    NdrFcShort( 0x2be ), /* Offset= 702 (928) */
/* 228 */    NdrFcLong( 0x400e ),              /* 16398 */
/* 232 */    NdrFcShort( 0x2c4 ), /* Offset= 708 (940) */
/* 234 */    NdrFcLong( 0x4010 ),              /* 16400 */
/* 238 */    NdrFcShort( 0x2c2 ), /* Offset= 706 (944) */
/* 240 */    NdrFcLong( 0x4012 ),              /* 16402 */
/* 244 */    NdrFcShort( 0x280 ), /* Offset= 640 (884) */
/* 246 */    NdrFcLong( 0x4013 ),              /* 16403 */
/* 250 */    NdrFcShort( 0x27e ), /* Offset= 638 (888) */
/* 252 */    NdrFcLong( 0x4016 ),              /* 16406 */
/* 256 */    NdrFcShort( 0x278 ), /* Offset= 632 (888) */
/* 258 */    NdrFcLong( 0x4017 ),              /* 16407 */
/* 262 */    NdrFcShort( 0x272 ), /* Offset= 626 (888) */
/* 264 */    NdrFcLong( 0x0 ),     /* 0 */
/* 268 */    NdrFcShort( 0x0 ),    /* Offset= 0 (268) */
/* 270 */    NdrFcLong( 0x1 ),     /* 1 */
/* 274 */    NdrFcShort( 0x0 ),    /* Offset= 0 (274) */
/* 276 */    NdrFcShort( 0xffffffff ),         /* Offset= -1 (275) */
/* 278 */
                                   0x15,                 /*
FC_STRUCT */
                                   0x7,                  /* 7 */
/* 280 */    NdrFcShort( 0x8 ),    /* 8 */
/* 282 */    0xb,                  /* FC_HYPER */
                                   0x5b,                 /* FC_END */
/* 284 */
                                   0x12, 0x0, /* FC_UP */
/* 286 */    NdrFcShort( 0xc ),    /* Offset= 12 (298) */
/* 288 */
                                   0x1b,                 /*
FC_CARRAY */
                                   0x1,                  /* 1 */
/* 290 */    NdrFcShort( 0x2 ),    /* 2 */
/* 292 */    0x9,                  /* Corr desc: FC_ULONG */
                                   0x0,                  /*  */
/* 294 */    NdrFcShort( 0xfffc ), /* -4 */
/* 296 */    0x6,                  /* FC_SHORT */
                                   0x5b,                 /* FC_END */
/* 298 */
                                   0x17,                 /*
FC_CSTRUCT */
                                   0x3,                  /* 3 */
/* 300 */    NdrFcShort( 0x8 ),    /* 8 */
/* 302 */    NdrFcShort( 0xfffffff2 ),         /* Offset= -14 (288) */
/* 304 */    0x8,                  /* FC_LONG */
                                   0x8,                  /* FC_LONG
*/
/* 306 */    0x5c,                 /* FC_PAD */
                                   0x5b,                 /* FC_END */
/* 308 */
                                   0x2f,                 /* FC_IP */
                                   0x5a,                 /*
FC_CONSTANT_IID */
/* 310 */    NdrFcLong( 0x0 ),     /* 0 */
/* 314 */    NdrFcShort( 0x0 ),    /* 0 */
/* 316 */    NdrFcShort( 0x0 ),    /* 0 */
/* 318 */    0xc0,                 /* 192 */
                                   0x0,                  /* 0 */
/* 320 */    0x0,                  /* 0 */
                                   0x0,                  /* 0 */
/* 322 */    0x0,                  /* 0 */
                                   0x0,                  /* 0 */
/* 324 */    0x0,                  /* 0 */
                                   0x46,                 /* 70 */
/* 326 */
                                   0x2f,                 /* FC_IP */
                                   0x5a,                 /*
FC_CONSTANT_IID */
/* 328 */    NdrFcLong( 0x20400 ),             /* 132096 */
```

```
/* 332 */   NdrFcShort( 0x0 ),    /* 0 */
/* 334 */   NdrFcShort( 0x0 ),    /* 0 */
/* 336 */   0xc0,                 /* 192 */
                                  0x0,                  /* 0 */
/* 338 */   0x0,                  /* 0 */
                                  0x0,                  /* 0 */
/* 340 */   0x0,                  /* 0 */
                                  0x0,                  /* 0 */
/* 342 */   0x0,                  /* 0 */
                                  0x46,                 /* 70 */
/* 344 */
                                  0x12, 0x10,           /* FC_UP */
/* 346 */   NdrFcShort( 0x2 ),    /* Offset= 2 (348) */
/* 348 */
                                  0x12, 0x0, /* FC_UP */
/* 350 */   NdrFcShort( 0x1fc ),  /* Offset= 508 (858) */
/* 352 */
                                  0x2a,                 /*
FC_ENCAPSULATED_UNION*/
                                  0x49,                 /* 73 */
/* 354 */   NdrFcShort( 0x18 ),   /* 24 */
/* 356 */   NdrFcShort( 0xa ),    /* 10 */
/* 358 */   NdrFcLong( 0x8 ),     /* 8 */
/* 362 */   NdrFcShort( 0x58 ),   /* Offset= 88 (450) */
/* 364 */   NdrFcLong( 0xd ),     /* 13 */
/* 368 */   NdrFcShort( 0x78 ),   /* Offset= 120 (488) */
/* 370 */   NdrFcLong( 0x9 ),     /* 9 */
/* 374 */   NdrFcShort( 0x94 ),   /* Offset= 148 (522) */
/* 376 */   NdrFcLong( 0xc ),     /* 12 */
/* 380 */   NdrFcShort( 0xbc ),   /* Offset= 188 (568) */
/* 382 */   NdrFcLong( 0x24 ),    /* 36 */
/* 386 */   NdrFcShort( 0x114 ),  /* Offset= 276 (662) */
/* 388 */   NdrFcLong( 0x800d ),          /* 32781 */
/* 392 */   NdrFcShort( 0x130 ),  /* Offset= 304 (696) */
/* 394 */   NdrFcLong( 0x10 ),    /* 16 */
/* 398 */   NdrFcShort( 0x148 ),  /* Offset= 328 (726) */
/* 400 */   NdrFcLong( 0x2 ),     /* 2 */
/* 404 */   NdrFcShort( 0x160 ),  /* Offset= 352 (756) */
/* 406 */   NdrFcLong( 0x3 ),     /* 3 */
/* 410 */   NdrFcShort( 0x178 ),  /* Offset= 376 (786) */
/* 412 */   NdrFcLong( 0x14 ),    /* 20 */
/* 416 */   NdrFcShort( 0x190 ),  /* Offset= 400 (816) */
/* 418 */   NdrFcShort( 0xffffffff ),         /* Offset= -1 (417) */
/* 420 */
                                  0x1b,                 /*
FC_CARRAY */
                                  0x3,                  /* 3 */
/* 422 */   NdrFcShort( 0x4 ),    /* 4 */
/* 424 */   0x19,                 /* Corr desc:  field pointer,
FC_ULONG */
                                  0x0,                  /*  */
/* 426 */   NdrFcShort( 0x0 ),    /* 0 */
/* 428 */
                                  0x4b,                 /* FC_PP */
                                  0x5c,                 /* FC_PAD */
/* 430 */
                                  0x48,                 /*
FC_VARIABLE_REPEAT*/
                                  0x49,                 /*
FC_FIXED_OFFSET*/
/* 432 */   NdrFcShort( 0x4 ),    /* 4 */
/* 434 */   NdrFcShort( 0x0 ),    /* 0 */
/* 436 */   NdrFcShort( 0x1 ),    /* 1 */
/* 438 */   NdrFcShort( 0x0 ),    /* 0 */
/* 440 */   NdrFcShort( 0x0 ),    /* 0 */
/* 442 */   0x12, 0x0, /* FC_UP */
/* 444 */   NdrFcShort( 0xffffff6e ),         /* Offset= -146 (298) */
/* 446 */
                                  0x5b,                 /* FC_END */

                                  0x8,                  /* FC_LONG
*/
/* 448 */   0x5c,                 /* FC_PAD */
                                  0x5b,                 /* FC_END */
/* 450 */
                                  0x16,                 /*
FC_PSTRUCT */
                                  0x3,                  /* 3 */
/* 452 */   NdrFcShort( 0x8 ),    /* 8 */
/* 454 */
                                  0x4b,                 /* FC_PP */
                                  0x5c,                 /* FC_PAD */
/* 456 */
                                  0x46,                 /*
FC_NO_REPEAT */
                                  0x5c,                 /* FC_PAD */
/* 458 */   NdrFcShort( 0x4 ),    /* 4 */
/* 460 */   NdrFcShort( 0x4 ),    /* 4 */
/* 462 */   0x11, 0x0, /* FC_RP */
/* 464 */   NdrFcShort( 0xffffffd4 ),         /* Offset= -44 (420) */
/* 466 */
                                  0x5b,                 /* FC_END */


                                  0x8,                  /* FC_LONG
*/
/* 468 */   0x8,                  /* FC_LONG */
                                  0x5b,                 /* FC_END */
/* 470 */
                                  0x21,                 /*
FC_BOGUS_ARRAY */
                                  0x3,                  /* 3 */
/* 472 */   NdrFcShort( 0x0 ),    /* 0 */
/* 474 */   0x19,                 /* Corr desc:  field pointer,
FC_ULONG */
                                  0x0,                  /*  */
/* 476 */   NdrFcShort( 0x0 ),    /* 0 */
/* 478 */   NdrFcLong( 0xffffffff ),          /* -1 */
/* 482 */   0x4c,                 /* FC_EMBEDDED_COMPLEX */
                                  0x0,                  /* 0 */
/* 484 */   NdrFcShort( 0xffffff50 ),         /* Offset= -176 (308) */
/* 486 */   0x5c,                 /* FC_PAD */
                                  0x5b,                 /* FC_END */
/* 488 */
                                  0x1a,                 /*
FC_BOGUS_STRUCT */
                                  0x3,                  /* 3 */
/* 490 */   NdrFcShort( 0x8 ),    /* 8 */
/* 492 */   NdrFcShort( 0x0 ),    /* 0 */
/* 494 */   NdrFcShort( 0x6 ),    /* Offset= 6 (500) */
/* 496 */   0x8,                  /* FC_LONG */
                                  0x36,                 /*
FC_POINTER */
/* 498 */   0x5c,                 /* FC_PAD */
                                  0x5b,                 /* FC_END */
/* 500 */
                                  0x11, 0x0, /* FC_RP */
/* 502 */   NdrFcShort( 0xfffffe0 ),          /* Offset= -32 (470) */
/* 504 */
                                  0x21,                 /*
FC_BOGUS_ARRAY */
                                  0x3,                  /* 3 */
/* 506 */   NdrFcShort( 0x0 ),    /* 0 */
/* 508 */   0x19,                 /* Corr desc:  field pointer,
FC_ULONG */
                                  0x0,                  /*  */
/* 510 */   NdrFcShort( 0x0 ),    /* 0 */
```

```
/* 512 */   NdrFcLong( 0xffffffff ),        /* -1 */
/* 516 */   0x4c,                   /* FC_EMBEDDED_COMPLEX */
                                    0x0,                    /* 0 */
/* 518 */   NdrFcShort( 0xffffff40 ),       /* Offset= -192 (326) */
/* 520 */   0x5c,                   /* FC_PAD */
                                    0x5b,                   /* FC_END */
/* 522 */
                                    0x1a,                   /*
FC_BOGUS_STRUCT */
                                    0x3,                    /* 3 */
/* 524 */   NdrFcShort( 0x8 ),      /* 8 */
/* 526 */   NdrFcShort( 0x0 ),      /* 0 */
/* 528 */   NdrFcShort( 0x6 ),      /* Offset= 6 (534) */
/* 530 */   0x8,                    /* FC_LONG */
                                    0x36,                   /*
FC_POINTER */
/* 532 */   0x5c,                   /* FC_PAD */
                                    0x5b,                   /* FC_END */
/* 534 */
                                    0x11, 0x0,              /* FC_RP */
/* 536 */   NdrFcShort( 0xffffffe0 ),       /* Offset= -32 (504) */
/* 538 */
                                    0x1b,                   /*
FC_CARRAY */
                                    0x3,                    /* 3 */
/* 540 */   NdrFcShort( 0x4 ),      /* 4 */
/* 542 */   0x19,                   /* Corr desc:  field pointer,
FC_ULONG */
                                    0x0,                    /*  */
/* 544 */   NdrFcShort( 0x0 ),      /* 0 */
/* 546 */
                                    0x4b,                   /* FC_PP */
                                    0x5c,                   /* FC_PAD */
/* 548 */
                                    0x48,                   /*
FC_VARIABLE_REPEAT */
                                    0x49,                   /*
FC_FIXED_OFFSET */
/* 550 */   NdrFcShort( 0x4 ),      /* 4 */
/* 552 */   NdrFcShort( 0x0 ),      /* 0 */
/* 554 */   NdrFcShort( 0x1 ),      /* 1 */
/* 556 */   NdrFcShort( 0x0 ),      /* 0 */
/* 558 */   NdrFcShort( 0x0 ),      /* 0 */
/* 560 */   0x12, 0x0,              /* FC_UP */
/* 562 */   NdrFcShort( 0xfffffdce ),       /* Offset= -562 (0) */
/* 564 */
                                    0x5b,                   /* FC_END */

                                    0x8,                    /* FC_LONG
*/
/* 566 */   0x5c,                   /* FC_PAD */
                                    0x5b,                   /* FC_END */
/* 568 */
                                    0x1a,                   /*
FC_BOGUS_STRUCT */
                                    0x3,                    /* 3 */
/* 570 */   NdrFcShort( 0x8 ),      /* 8 */
/* 572 */   NdrFcShort( 0x0 ),      /* 0 */
/* 574 */   NdrFcShort( 0x6 ),      /* Offset= 6 (580) */
/* 576 */   0x8,                    /* FC_LONG */
                                    0x36,                   /*
FC_POINTER */
/* 578 */   0x5c,                   /* FC_PAD */
                                    0x5b,                   /* FC_END */
/* 580 */
                                    0x11, 0x0,              /* FC_RP */
/* 582 */   NdrFcShort( 0xfffffd4 ),        /* Offset= -44 (538) */
/* 584 */
                                    0x2f,                   /* FC_IP */
                                    0x5a,                   /*
FC_CONSTANT_IID */
/* 586 */   NdrFcLong( 0x2f ),      /* 47 */
/* 590 */   NdrFcShort( 0x0 ),      /* 0 */
/* 592 */   NdrFcShort( 0x0 ),      /* 0 */
/* 594 */   0xc0,                   /* 192 */
                                    0x0,                    /* 0 */
/* 596 */   0x0,                    /* 0 */
                                    0x0,                    /* 0 */
/* 598 */   0x0,                    /* 0 */
                                    0x0,                    /* 0 */
/* 600 */   0x0,                    /* 0 */
                                    0x46,                   /* 70 */
/* 602 */
                                    0x1b,                   /*
FC_CARRAY */
                                    0x0,                    /* 0 */
/* 604 */   NdrFcShort( 0x1 ),      /* 1 */
/* 606 */   0x19,                   /* Corr desc:  field pointer,
FC_ULONG */
                                    0x0,                    /*  */
/* 608 */   NdrFcShort( 0x4 ),      /* 4 */
/* 610 */   0x1,                    /* FC_BYTE */
                                    0x5b,                   /* FC_END */
/* 612 */
                                    0x1a,                   /*
FC_BOGUS_STRUCT */
                                    0x3,                    /* 3 */
/* 614 */   NdrFcShort( 0x10 ),     /* 16 */
/* 616 */   NdrFcShort( 0x0 ),      /* 0 */
/* 618 */   NdrFcShort( 0xa ),      /* Offset= 10 (628) */
/* 620 */   0x8,                    /* FC_LONG */
                                    0x8,                    /* FC_LONG
*/
/* 622 */   0x4c,                   /* FC_EMBEDDED_COMPLEX */
                                    0x0,                    /* 0 */
/* 624 */   NdrFcShort( 0xfffffd8 ),        /* Offset= -40 (584) */
/* 626 */   0x36,                   /* FC_POINTER */
                                    0x5b,                   /* FC_END */
/* 628 */
                                    0x12, 0x0,              /* FC_UP */
/* 630 */   NdrFcShort( 0xfffffe4 ),        /* Offset= -28 (602) */
/* 632 */
                                    0x1b,                   /*
FC_CARRAY */
                                    0x3,                    /* 3 */
/* 634 */   NdrFcShort( 0x4 ),      /* 4 */
/* 636 */   0x19,                   /* Corr desc:  field pointer,
FC_ULONG */
                                    0x0,                    /*  */
/* 638 */   NdrFcShort( 0x0 ),      /* 0 */
/* 640 */
                                    0x4b,                   /* FC_PP */
                                    0x5c,                   /* FC_PAD */
/* 642 */
                                    0x48,                   /*
FC_VARIABLE_REPEAT */
                                    0x49,                   /*
FC_FIXED_OFFSET */
/* 644 */   NdrFcShort( 0x4 ),      /* 4 */
/* 646 */   NdrFcShort( 0x0 ),      /* 0 */
/* 648 */   NdrFcShort( 0x1 ),      /* 1 */
/* 650 */   NdrFcShort( 0x0 ),      /* 0 */
/* 652 */   NdrFcShort( 0x0 ),      /* 0 */
/* 654 */   0x12, 0x0,              /* FC_UP */
/* 656 */   NdrFcShort( 0xfffffd4 ),        /* Offset= -44 (612) */
/* 658 */
```

```
                                0x5b,                   /* FC_END */
                                0x8,                    /* FC_LONG
*/
/* 660 */   0x5c,               /* FC_PAD */
                                0x5b,                   /* FC_END */
/* 662 */
                                0x1a,                   /*
FC_BOGUS_STRUCT */
                                0x3,                    /* 3 */
/* 664 */   NdrFcShort( 0x8 ),  /* 8 */
/* 666 */   NdrFcShort( 0x0 ),  /* 0 */
/* 668 */   NdrFcShort( 0x6 ),  /* Offset= 6 (674) */
/* 670 */   0x8,                /* FC_LONG */
                                0x36,                   /*
FC_POINTER */
/* 672 */   0x5c,               /* FC_PAD */
                                0x5b,                   /* FC_END */
/* 674 */
                                0x11, 0x0, /* FC_RP */
/* 676 */   NdrFcShort( 0xfffffd4 ),        /* Offset= -44 (632) */
/* 678 */
                                0x1d,                   /*
FC_SMFARRAY */
                                0x0,                    /* 0 */
/* 680 */   NdrFcShort( 0x8 ),  /* 8 */
/* 682 */   0x2,                /* FC_CHAR */
                                0x5b,                   /* FC_END */
/* 684 */
                                0x15,                   /*
FC_STRUCT */
                                0x3,                    /* 3 */
/* 686 */   NdrFcShort( 0x10 ), /* 16 */
/* 688 */   0x8,                /* FC_LONG */
                                0x6,                    /* FC_SHORT
*/
/* 690 */   0x6,                /* FC_SHORT */
                                0x4c,                   /*
FC_EMBEDDED_COMPLEX */
/* 692 */   0x0,                /* 0 */
                                NdrFcShort( 0xfffffff1 ),       /*
Offset= -15 (678) */
                                0x5b,                   /* FC_END */
/* 696 */
                                0x1a,                   /*
FC_BOGUS_STRUCT */
                                0x3,                    /* 3 */
/* 698 */   NdrFcShort( 0x18 ), /* 24 */
/* 700 */   NdrFcShort( 0x0 ),  /* 0 */
/* 702 */   NdrFcShort( 0xa ),  /* Offset= 10 (712) */
/* 704 */   0x8,                /* FC_LONG */
                                0x36,                   /*
FC_POINTER */
/* 706 */   0x4c,               /* FC_EMBEDDED_COMPLEX */
                                0x0,                    /* 0 */
/* 708 */   NdrFcShort( 0xfffffe8 ),        /* Offset= -24 (684) */
/* 710 */   0x5c,               /* FC_PAD */
                                0x5b,                   /* FC_END */
/* 712 */
                                0x11, 0x0, /* FC_RP */
/* 714 */   NdrFcShort( 0xffffff0c ),       /* Offset= -244 (470) */
/* 716 */
                                0x1b,                   /*
FC_CARRAY */
                                0x0,                    /* 0 */
/* 718 */   NdrFcShort( 0x1 ),  /* 1 */
/* 720 */   0x19,               /* Corr desc:  field pointer,
FC_ULONG */
                                0x0,                    /*  */
/* 722 */   NdrFcShort( 0x0 ),  /* 0 */
/* 724 */   0x1,                /* FC_BYTE */
                                0x5b,                   /* FC_END */
/* 726 */
                                0x16,                   /*
FC_PSTRUCT */
                                0x3,                    /* 3 */
/* 728 */   NdrFcShort( 0x8 ),  /* 8 */
/* 730 */
                                0x4b,                   /* FC_PP */
                                0x5c,                   /* FC_PAD */
/* 732 */
                                0x46,                   /*
FC_NO_REPEAT */
                                0x5c,                   /* FC_PAD */
/* 734 */   NdrFcShort( 0x4 ),  /* 4 */
/* 736 */   NdrFcShort( 0x4 ),  /* 4 */
/* 738 */   0x12, 0x0, /* FC_UP */
/* 740 */   NdrFcShort( 0xfffffe8 ),        /* Offset= -24 (716) */
/* 742 */
                                0x5b,                   /* FC_END */
                                0x8,                    /* FC_LONG
*/
/* 744 */   0x8,                /* FC_LONG */
                                0x5b,                   /* FC_END */
/* 746 */
                                0x1b,                   /*
FC_CARRAY */
                                0x1,                    /* 1 */
/* 748 */   NdrFcShort( 0x2 ),  /* 2 */
/* 750 */   0x19,               /* Corr desc:  field pointer,
FC_ULONG */
                                0x0,                    /*  */
/* 752 */   NdrFcShort( 0x0 ),  /* 0 */
/* 754 */   0x6,                /* FC_SHORT */
                                0x5b,                   /* FC_END */
/* 756 */
                                0x16,                   /*
FC_PSTRUCT */
                                0x3,                    /* 3 */
/* 758 */   NdrFcShort( 0x8 ),  /* 8 */
/* 760 */
                                0x4b,                   /* FC_PP */
                                0x5c,                   /* FC_PAD */
/* 762 */
                                0x46,                   /*
FC_NO_REPEAT */
                                0x5c,                   /* FC_PAD */
/* 764 */   NdrFcShort( 0x4 ),  /* 4 */
/* 766 */   NdrFcShort( 0x4 ),  /* 4 */
/* 768 */   0x12, 0x0, /* FC_UP */
/* 770 */   NdrFcShort( 0xfffffe8 ),        /* Offset= -24 (746) */
/* 772 */
                                0x5b,                   /* FC_END */
                                0x8,                    /* FC_LONG
*/
/* 774 */   0x8,                /* FC_LONG */
                                0x5b,                   /* FC_END */
/* 776 */
                                0x1b,                   /*
FC_CARRAY */
                                0x3,                    /* 3 */
/* 778 */   NdrFcShort( 0x4 ),  /* 4 */
/* 780 */   0x19,               /* Corr desc:  field pointer,
FC_ULONG */
```

```
                                0x0,                    /*  */
/* 782 */   NdrFcShort( 0x0 ),   /* 0 */
/* 784 */   0x8,                 /* FC_LONG */
                                0x5b,                   /* FC_END */
/* 786 */
                                0x16,                   /*
FC_PSTRUCT */
                                0x3,                    /* 3 */
/* 788 */   NdrFcShort( 0x8 ),   /* 8 */
/* 790 */
                                0x4b,                   /* FC_PP */
                                0x5c,                   /* FC_PAD */
/* 792 */
                                0x46,                   /*
FC_NO_REPEAT */
                                0x5c,                   /* FC_PAD */
/* 794 */   NdrFcShort( 0x4 ),   /* 4 */
/* 796 */   NdrFcShort( 0x4 ),   /* 4 */
/* 798 */   0x12, 0x0, /* FC_UP */
/* 800 */   NdrFcShort( 0xfffffff8 ),           /* Offset= -24 (776) */
/* 802 */
                                0x5b,                   /* FC_END */

                                0x8,                    /* FC_LONG
*/
/* 804 */   0x8,                 /* FC_LONG */
                                0x5b,                   /* FC_END */
/* 806 */
                                0x1b,                   /*
FC_CARRAY */
                                0x7,                    /* 7 */
/* 808 */   NdrFcShort( 0x8 ),   /* 8 */
/* 810 */   0x19,                /* Corr desc:  field pointer,
FC_ULONG */
                                0x0,                    /*  */
/* 812 */   NdrFcShort( 0x0 ),   /* 0 */
/* 814 */   0xb,                 /* FC_HYPER */
                                0x5b,                   /* FC_END */
/* 816 */
                                0x16,                   /*
FC_PSTRUCT */
                                0x3,                    /* 3 */
/* 818 */   NdrFcShort( 0x8 ),   /* 8 */
/* 820 */
                                0x4b,                   /* FC_PP */
                                0x5c,                   /* FC_PAD */
/* 822 */
                                0x46,                   /*
FC_NO_REPEAT */
                                0x5c,                   /* FC_PAD */
/* 824 */   NdrFcShort( 0x4 ),   /* 4 */
/* 826 */   NdrFcShort( 0x4 ),   /* 4 */
/* 828 */   0x12, 0x0, /* FC_UP */
/* 830 */   NdrFcShort( 0xfffffff8 ),           /* Offset= -24 (806) */
/* 832 */
                                0x5b,                   /* FC_END */

                                0x8,                    /* FC_LONG
*/
/* 834 */   0x8,                 /* FC_LONG */
                                0x5b,                   /* FC_END */
/* 836 */
                                0x15,                   /*
FC_STRUCT */
                                0x3,                    /* 3 */
/* 838 */   NdrFcShort( 0x8 ),   /* 8 */
/* 840 */   0x8,                 /* FC_LONG */
                                0x8,                    /* FC_LONG
*/
/* 842 */   0x5c,                /* FC_PAD */
                                0x5b,                   /* FC_END */
/* 844 */
                                0x1b,                   /*
FC_CARRAY */
                                0x3,                    /* 3 */
/* 846 */   NdrFcShort( 0x8 ),   /* 8 */
/* 848 */   0x7,                 /* Corr desc: FC_USHORT */
                                0x0,                    /*  */
/* 850 */   NdrFcShort( 0xffd8 ),/* -40 */
/* 852 */   0x4c,                /* FC_EMBEDDED_COMPLEX */
                                0x0,                    /* 0 */
/* 854 */   NdrFcShort( 0xffffffee ),           /* Offset= -18 (836) */
/* 856 */   0x5c,                /* FC_PAD */
                                0x5b,                   /* FC_END */
/* 858 */
                                0x1a,                   /*
FC_BOGUS_STRUCT */
                                0x3,                    /* 3 */
/* 860 */   NdrFcShort( 0x28 ),  /* 40 */
/* 862 */   NdrFcShort( 0xffffffee ),           /* Offset= -18 (844) */
/* 864 */   NdrFcShort( 0x0 ),   /* Offset= 0 (864) */
/* 866 */   0x6,                 /* FC_SHORT */
                                0x6,                    /* FC_SHORT
*/
/* 868 */   0x38,                /* FC_ALIGNM4 */
                                0x8,                    /* FC_LONG
*/
/* 870 */   0x8,                 /* FC_LONG */
                                0x4c,                   /*
FC_EMBEDDED_COMPLEX */
/* 872 */   0x0,                 /* 0 */
                                NdrFcShort( 0xfffffdf7 ),           /*
Offset= -521 (352) */
                                0x5b,                   /* FC_END */
/* 876 */
                                0x12, 0x0, /* FC_UP */
/* 878 */   NdrFcShort( 0xfffffef6 ),           /* Offset= -266 (612) */
/* 880 */
                                0x12, 0x8, /* FC_UP
[simple_pointer] */
/* 882 */   0x1,                 /* FC_BYTE */
                                0x5c,                   /* FC_PAD */
/* 884 */
                                0x12, 0x8, /* FC_UP
[simple_pointer] */
/* 886 */   0x6,                 /* FC_SHORT */
                                0x5c,                   /* FC_PAD */
/* 888 */
                                0x12, 0x8, /* FC_UP
[simple_pointer] */
/* 890 */   0x8,                 /* FC_LONG */
                                0x5c,                   /* FC_PAD */
/* 892 */
                                0x12, 0x8, /* FC_UP
[simple_pointer] */
/* 894 */   0xa,                 /* FC_FLOAT */
                                0x5c,                   /* FC_PAD */
/* 896 */
                                0x12, 0x8, /* FC_UP
[simple_pointer] */
/* 898 */   0xc,                 /* FC_DOUBLE */
                                0x5c,                   /* FC_PAD */
/* 900 */
                                0x12, 0x0, /* FC_UP */
/* 902 */   NdrFcShort( 0xfffffd90 ),           /* Offset= -624 (278) */
```

```
/* 904 */
                                0x12, 0x10,             /* FC_UP */
/* 906 */   NdrFcShort( 0xfffffd92 ),           /* Offset= -622 (284) */
/* 908 */
                                0x12, 0x10,             /* FC_UP */
/* 910 */   NdrFcShort( 0xfffffda6 ),           /* Offset= -602 (308) */
/* 912 */
                                0x12, 0x10,             /* FC_UP */
/* 914 */   NdrFcShort( 0xfffffdb4 ),           /* Offset= -588 (326) */
/* 916 */
                                0x12, 0x10,             /* FC_UP */
/* 918 */   NdrFcShort( 0xfffffdc2 ),           /* Offset= -574 (344) */
/* 920 */
                                0x12, 0x10,             /* FC_UP */
/* 922 */   NdrFcShort( 0x2 ),  /* Offset= 2 (924) */
/* 924 */
                                0x12, 0x0, /* FC_UP */
/* 926 */   NdrFcShort( 0xfffffc62 ),           /* Offset= -926 (0) */
/* 928 */
                                0x15,                   /*
FC_STRUCT */
                                0x7,                    /* 7 */
/* 930 */   NdrFcShort( 0x10 ), /* 16 */
/* 932 */   0x6,                /* FC_SHORT */
                                0x1,                    /* FC_BYTE
*/
/* 934 */   0x1,                /* FC_BYTE */
                                0x38,                   /*
FC_ALIGNM4 */
/* 936 */   0x8,                /* FC_LONG */
                                0x39,                   /*
FC_ALIGNM8 */
/* 938 */   0xb,                /* FC_HYPER */
                                0x5b,                   /* FC_END */
/* 940 */
                                0x12, 0x0, /* FC_UP */
/* 942 */   NdrFcShort( 0xfffffff2 ),           /* Offset= -14 (928) */
/* 944 */
                                0x12, 0x8, /* FC_UP
[simple_pointer] */
/* 946 */   0x2,                /* FC_CHAR */
                                0x5c,                   /* FC_PAD */
/* 948 */
                                0x1a,                   /*
FC_BOGUS_STRUCT */
                                0x7,                    /* 7 */
/* 950 */   NdrFcShort( 0x20 ), /* 32 */
/* 952 */   NdrFcShort( 0x0 ),  /* 0 */
/* 954 */   NdrFcShort( 0x0 ),  /* Offset= 0 (954) */
/* 956 */   0x8,                /* FC_LONG */
                                0x8,                    /* FC_LONG
*/
/* 958 */   0x6,                /* FC_SHORT */
                                0x6,                    /* FC_SHORT
*/
/* 960 */   0x6,                /* FC_SHORT */
                                0x6,                    /* FC_SHORT
*/
/* 962 */   0x4c,               /* FC_EMBEDDED_COMPLEX */
                                0x0,                    /* 0 */
/* 964 */   NdrFcShort( 0xfffffc42 ),           /* Offset= -958 (6) */
/* 966 */   0x5c,               /* FC_PAD */
                                0x5b,                   /* FC_END */
/* 968 */   0xb4,               /* FC_USER_MARSHAL */
                                0x83,                   /* 131 */
/* 970 */   NdrFcShort( 0x0 ),  /* 0 */
/* 972 */   NdrFcShort( 0x10 ), /* 16 */
/* 974 */   NdrFcShort( 0x0 ),  /* 0 */
/* 976 */   NdrFcShort( 0xfffffc32 ),           /* Offset= -974 (2) */
/* 978 */
                                0x11, 0x4, /* FC_RP
[alloced_on_stack] */
/* 980 */   NdrFcShort( 0x6 ),  /* Offset= 6 (986) */
/* 982 */
                                0x13, 0x0, /* FC_OP */
/* 984 */   NdrFcShort( 0xffffffdc ),           /* Offset= -36 (948) */
/* 986 */   0xb4,               /* FC_USER_MARSHAL */
                                0x83,                   /* 131 */
/* 988 */   NdrFcShort( 0x0 ),  /* 0 */
/* 990 */   NdrFcShort( 0x10 ), /* 16 */
/* 992 */   NdrFcShort( 0x0 ),  /* 0 */
/* 994 */   NdrFcShort( 0xfffffff4 ),           /* Offset= -12 (982) */

                                0x0
        }
    };

const CInterfaceProxyVtbl * _tpcc_com_remote_ps_ProxyVtblList[] =

{
    ( CInterfaceProxyVtbl *) &_ITPCCremProxyVtbl,
    0
};

const CInterfaceStubVtbl * _tpcc_com_remote_ps_StubVtblList[] =
{
    ( CInterfaceStubVtbl *) &_ITPCCremStubVtbl,
    0
};

PCInterfaceName const _tpcc_com_remote_ps_InterfaceNamesList[] =

{
    "ITPCCrem",
    0
};


#define _tpcc_com_remote_ps_CHECK_IID(n)
IID_GENERIC_CHECK_IID( _tpcc_com_remote_ps, pIID, n)

int __stdcall _tpcc_com_remote_ps_IID_Lookup( const IID * pIID, int
* pIndex )
{

    if(!_tpcc_com_remote_ps_CHECK_IID(0))
        {
        *pIndex = 0;
        return 1;
        }

    return 0;
}

const ExtendedProxyFileInfo tpcc_com_remote_ps_ProxyFileInfo =
{
    (PCInterfaceProxyVtblList *) &
_tpcc_com_remote_ps_ProxyVtblList,
    (PCInterfaceStubVtblList *) & _tpcc_com_remote_ps_StubVtblList,
    (const PCInterfaceName * ) &
_tpcc_com_remote_ps_InterfaceNamesList,
    0, // no delegation
    & _tpcc_com_remote_ps_IID_Lookup,
    1,
    2,
    0, /* table of [async_uuid] interfaces */
```

```
   0, /* Filler1 */
   0, /* Filler2 */
   0  /* Filler3 */
};
```

tpcc_com_remote_resource.h

```
//{{NO_DEPENDENCIES}}
// Microsoft Developer Studio generated include file.
// Used by tpcc_com_remote.rc
//
#define IDS_PROJNAME                100
#define IDR_TPCCrem                 101

// Next default values for new objects
//
#ifdef APSTUDIO_INVOKED
#ifndef APSTUDIO_READONLY_SYMBOLS
#define _APS_NEXT_RESOURCE_VALUE        202
#define _APS_NEXT_COMMAND_VALUE         32768
#define _APS_NEXT_CONTROL_VALUE         201
#define _APS_NEXT_SYMED_VALUE           102
#endif
#endif
```

tpcc_com_sl.rgs

```
HKCR
{
        TPCC.StockLevel.1 = s 'StockLevel Class'
        {
                CLSID = s
'{2668369E-A50D-11D2-BA4E-00C04FBFE08B}'
        }
        TPCC.StockLevel = s 'StockLevel Class'
        {
                CurVer = s 'TPCC.StockLevel.1'
        }
        NoRemove CLSID
        {
                ForceRemove
{2668369E-A50D-11D2-BA4E-00C04FBFE08B} = s 'StockLevel
Class'
                {
                        ProgID = s 'TPCC.StockLevel.1'
                        VersionIndependentProgID = s
'TPCC.StockLevel'
                        InprocServer32 = s '%MODULE%'
                        {
                                val ThreadingModel = s
'Both'
                        }
                }
        }
}
```

tpcc_odbc.cpp

```
/*      FILE:                   TPCC_ODBC.CPP
 *                              Microsoft TPC-C Kit Ver.
4.20.000
 *                              Copyright Microsoft,
1999
 *      All Rights Reserved
 *                                                  Version 4.10.000 audited
by Richard Gimarc, Performance Metrics, 3/17/99
 *
 *      PURPOSE:        Implements ODBC calls for TPC-C
txns.
 *      Contact:    Charles Levine (clevine@microsoft.com)
 *
 *  Change history:
 *                  4.30.000 - changes for w_id > 32767 and
multinode options.
 *                  4.20.000 - updated rev number to match kit
 *                  4.10.001 - not deleting error class in catch
handler on deadlock retry;
 *                                                  not a functional bug, but
a memory leak
 */

#include <windows.h>
#include <stdio.h>
#include <assert.h>

#define DBNTWIN32
#include <sqltypes.h>
#include <sql.h>
#include <sqlext.h>
#include <odbcss.h>

#ifdef ICECAP
#include <icapexp.h>
#endif

// need to declare functions for export
#define DllDecl  __declspec( dllexport )

#include "..\..\common\src\error.h"
#include "..\..\common\src\trans.h"
#include "..\..\common\src\txn_base.h"
#include "tpcc_odbc.h"

// version string; must match return value from tpcc_version stored
proc
const char  sVersion[] = "4.10.000";

const iMaxRetries = 10;                         // how many retries on
deadlock

const int iErrOleDbProvider = 7312;
const char sErrTimeoutExpired[] = "Timeout expired";


#define ErrTrace 1

#ifdef ErrTrace
FILE    *errFile;
#endif

static SQLHENV henv = SQL_NULL_HENV;
        // ODBC environment handle

BOOL APIENTRY DllMain(HMODULE hModule, DWORD
ul_reason_for_call, LPVOID lpReserved)
{
        switch( ul_reason_for_call )
        {
                case DLL_PROCESS_ATTACH:

DisableThreadLibraryCalls(hModule);
```

```
                        if (
SQLAllocHandleStd(SQL_HANDLE_ENV,SQL_NULL_HANDLE,
&henv) != SQL_SUCCESS )
                                return FALSE;
#ifdef ErrTrace
                        errFile =
fopen("c:\\odbcerrfile.txt","a");
#endif
                        break;

                case DLL_PROCESS_DETACH:
                        if (henv != NULL)
                                SQLFreeEnv(henv);
                        break;

                default:
                        /* nothing */;
        }
        return TRUE;
}

/* FUNCTION: CTPCC_ODBC_ERR::ErrorText
 *
 */

char* CTPCC_ODBC_ERR::ErrorText(void)
{
        int i;

        static SERRORMSG errorMsgs[] =
        {
                { ERR_WRONG_SP_VERSION,
"Wrong version of stored procs on database server"      },
                { ERR_INVALID_CUST,
"Invalid Customer id,name."
                },
                { ERR_NO_SUCH_ORDER,            "No
orders found for customer."
        },
                { ERR_RETRIED_TRANS,
"Retries before transaction succeeded."
},
                { 0,
        ""

}
        };

        static char szNotFound[] = "Unknown error number.";

        for(i=0; errorMsgs[i].szMsg[0]; i++)
        {
                if ( m_errno == errorMsgs[i].iError )
                        break;
        }
        if ( !errorMsgs[i].szMsg[0] )
                return szNotFound;
        else
                return errorMsgs[i].szMsg;
}

// wrapper routine for class constructor
__declspec(dllexport) CTPCC_ODBC* CTPCC_ODBC_new(
        LPCSTR szServer,        // name of SQL server
        LPCSTR szUser,                  // user name
for login
        LPCSTR szPassword,      // password for login
        LPCSTR szHost,                  // not used
        LPCSTR szDatabase )     // name of database to use
{
        return new CTPCC_ODBC( szServer, szUser, szPassword,
szHost, szDatabase );
}


CTPCC_ODBC::CTPCC_ODBC (
        LPCSTR szServer,                                //
name of SQL server
        LPCSTR szUser,
// user name for login
        LPCSTR szPassword,                              //
password for login
        LPCSTR szHost,
// not used
        LPCSTR szDatabase                               //
name of database to use
        )
{
        RETCODE                 rc;

        // initialization
        m_hdbc = SQL_NULL_HDBC;
        m_hstmt = SQL_NULL_HSTMT;

        m_hstmtNewOrder = SQL_NULL_HSTMT;
        m_hstmtPayment = SQL_NULL_HSTMT;
        m_hstmtDelivery = SQL_NULL_HSTMT;
        m_hstmtOrderStatus = SQL_NULL_HSTMT;
        m_hstmtStockLevel = SQL_NULL_HSTMT;

        m_descNewOrderCols1 = SQL_NULL_HDESC;
        m_descNewOrderCols2 = SQL_NULL_HDESC;
        m_descOrderStatusCols1 = SQL_NULL_HDESC;
        m_descOrderStatusCols2 = SQL_NULL_HDESC;


        if ( SQLAllocHandle(SQL_HANDLE_DBC,henv,
&m_hdbc) != SQL_SUCCESS )
                ThrowError(CODBCERR::eAllocHandle);

        if ( SQLSetConnectOption(m_hdbc, SQL_PACKET_SIZE,
4096) != SQL_SUCCESS )
                ThrowError(CODBCERR::eConnOption);

        {
                char
szConnectStr[256];
                char
szOutStr[1024];
                SQLSMALLINT             iOutStrLen;

                sprintf( szConnectStr, "DRIVER=SQL
Server;SERVER=%s;UID=%s;PWD=%s;DATABASE=%s",
                        szServer, szUser, szPassword,
szDatabase );

                rc = SQLDriverConnect(m_hdbc, NULL,
(SQLCHAR*)szConnectStr, sizeof(szConnectStr),
                        (SQLCHAR*)szOutStr,
sizeof(szOutStr), &iOutStrLen, SQL_DRIVER_NOPROMPT );

                if (rc != SQL_SUCCESS && rc !=
SQL_SUCCESS_WITH_INFO)

ThrowError(CODBCERR::eConnect);
        }
```

```
	if (SQLAllocHandle(SQL_HANDLE_STMT,m_hdbc,
&m_hstmt) != SQL_SUCCESS)
		ThrowError(CODBCERR::eAllocHandle);

	{

		// set some options affecting connection behavior
		char			buffer[128];

		// set some options affecting connection behavior
		strcpy(buffer, "set nocount on ");
		strcat(buffer, "set XACT_ABORT ON " );

		// for coyote
		strcat(buffer, "set ansi_warnings on " );
		strcat(buffer, "set ansi_nulls on " );
		rc = SQLExecDirect(m_hstmt, (unsigned char
*)buffer, SQL_NTS);
		if (rc != SQL_SUCCESS && rc !=
SQL_SUCCESS_WITH_INFO)

ThrowError(CODBCERR::eExecDirect);

		// verify that version of stored procs on server is
correct
		char db_sp_version[10];
		strcpy(buffer, "{call tpcc_version}");
		rc = SQLExecDirect(m_hstmt, (unsigned char
*)buffer, SQL_NTS);
		if (rc != SQL_SUCCESS && rc !=
SQL_SUCCESS_WITH_INFO)

ThrowError(CODBCERR::eExecDirect);
		if ( SQLBindCol(m_hstmt, 1, SQL_C_CHAR,
&db_sp_version, sizeof(db_sp_version), NULL) != SQL_SUCCESS )

ThrowError(CODBCERR::eBindCol);
		if ( SQLFetch(m_hstmt) == SQL_ERROR )
			ThrowError(CODBCERR::eFetch);
		if (strcmp(db_sp_version,sVersion))
			throw new CTPCC_ODBC_ERR(
CTPCC_ODBC_ERR::ERR_WRONG_SP_VERSION );

		SQLFreeHandle(SQL_HANDLE_STMT,
m_hstmt);
	}

	// Bind parameters for each of the transactions
	InitNewOrderParams();
	InitPaymentParams();
	InitOrderStatusParams();
	InitDeliveryParams();
	InitStockLevelParams();
}

CTPCC_ODBC::~CTPCC_ODBC( void )
{
	// note: descriptors are automatically released when the
connection is dropped
	SQLFreeHandle(SQL_HANDLE_STMT,
m_hstmtNewOrder);
	SQLFreeHandle(SQL_HANDLE_STMT,
m_hstmtPayment);
	SQLFreeHandle(SQL_HANDLE_STMT,
m_hstmtDelivery);
	SQLFreeHandle(SQL_HANDLE_STMT,
m_hstmtOrderStatus);
	SQLFreeHandle(SQL_HANDLE_STMT,
m_hstmtStockLevel);

	SQLDisconnect(m_hdbc);
	SQLFreeHandle(SQL_HANDLE_DBC,m_hdbc);
}

void CTPCC_ODBC::ThrowError( CODBCERR::ACTION eAction )
{
	RETCODE			rc;
	SDWORD		lNativeError;
	char			szState[6];
	char
szMsg[SQL_MAX_MESSAGE_LENGTH];
	char
szTmp[6*SQL_MAX_MESSAGE_LENGTH];
	CODBCERR	*pODBCErr;				//
not allocated until needed (maybe never)

	pODBCErr = new CODBCERR();

	pODBCErr->m_NativeError = 0;
	pODBCErr->m_eAction = eAction;
	pODBCErr->m_bDeadLock = FALSE;

	szTmp[0] = 0;
	while (TRUE)
	{
		rc = SQLError(henv, m_hdbc, m_hstmt, (BYTE
*)&szState, &lNativeError,
					(BYTE
*)&szMsg, sizeof(szMsg), NULL);
		if (rc == SQL_NO_DATA)
			break;

		// check for deadlock
		if (lNativeError == 1205 || (lNativeError ==
iErrOleDbProvider &&
			strstr(szMsg, sErrTimeoutExpired) !=
NULL))
			pODBCErr->m_bDeadLock =
TRUE;

		// capture the (first) database error
		if (pODBCErr->m_NativeError == 0 &&
lNativeError != 0)
			pODBCErr->m_NativeError =
lNativeError;

		// quit if there isn't enough room to concatenate
error text
		if ( (strlen(szMsg) + 2) > (sizeof(szTmp) -
strlen(szTmp)) )
		{
#ifdef ErrTrace
		fprintf(errFile,"%s\n",szMsg);
		fflush(errFile);
#endif
			break;
		}

		// include line break after first error msg
		if (szTmp[0] != 0)
			strcat( szTmp, "\n");
		strcat( szTmp, szMsg );
	}
```

```
		if (pODBCErr->m_odbcerrstr != NULL)
		{
			delete [] pODBCErr->m_odbcerrstr;
			pODBCErr->m_odbcerrstr = NULL;
		}

		if (strlen(szTmp) > 0)
		{
			pODBCErr->m_odbcerrstr = new char[
strlen(szTmp)+1 ];
			strcpy( pODBCErr->m_odbcerrstr, szTmp );
#ifdef ErrTrace
			fprintf(errFile,"%s\n",szTmp);
			fflush(errFile);
#endif
		}

		SQLFreeStmt(m_hstmt, SQL_CLOSE);
		throw pODBCErr;
}

void CTPCC_ODBC::InitStockLevelParams()
{
		if (   SQLAllocHandle(SQL_HANDLE_STMT,m_hdbc,
&m_hstmtStockLevel) != SQL_SUCCESS )
			ThrowError(CODBCERR::eAllocHandle);

		m_hstmt = m_hstmtStockLevel;

		int i = 0;
		if (   SQLBindParameter(m_hstmt, ++i,
SQL_PARAM_INPUT, SQL_C_SLONG, SQL_INTEGER, 0, 0,
&m_txn.StockLevel.w_id, 0, NULL) != SQL_SUCCESS
			|| SQLBindParameter(m_hstmt, ++i,
SQL_PARAM_INPUT, SQL_C_UTINYINT, SQL_TINYINT, 0, 0,
&m_txn.StockLevel.d_id, 0, NULL) != SQL_SUCCESS
			|| SQLBindParameter(m_hstmt, ++i,
SQL_PARAM_INPUT, SQL_C_SSHORT, SQL_SMALLINT, 0, 0,
&m_txn.StockLevel.threshold, 0, NULL) != SQL_SUCCESS
			)
			ThrowError(CODBCERR::eBindParam);

		if ( SQLBindCol(m_hstmt, 1, SQL_C_SLONG,
&m_txn.StockLevel.low_stock, 0, NULL) != SQL_SUCCESS )
			ThrowError(CODBCERR::eBindCol);
}

void CTPCC_ODBC::StockLevel()
{
		RETCODE				rc;
		int				iTryCount = 0;

		m_hstmt = m_hstmtStockLevel;

		while (TRUE)
		{
			try
			{
				rc = SQLExecDirectW(m_hstmt,
(SQLWCHAR*)L"{call tpcc_stocklevel(?,?,?)}", SQL_NTS);
				if (rc != SQL_SUCCESS && rc !=
SQL_SUCCESS_WITH_INFO)

ThrowError(CODBCERR::eExecDirect);

				if ( SQLFetch(m_hstmt) ==
SQL_ERROR )

ThrowError(CODBCERR::eFetch);

				SQLFreeStmt(m_hstmt,
SQL_CLOSE);

				m_txn.StockLevel.exec_status_code
= eOK;
				break;
			}
			catch (CODBCERR *e)
			{
				if ((!e->m_bDeadLock) ||
(++iTryCount > iMaxRetries))
					throw;

				// hit deadlock; backoff for
increasingly longer period
				delete e;
				Sleep(10 * iTryCount);
			}
		}

//		if (iTryCount)
//			throw new

CTPCC_ODBC_ERR(CTPCC_ODBC_ERR::ERR_RETRIED_TRAN
S, iTryCount);
}

void CTPCC_ODBC::InitNewOrderParams()
{
		if (   SQLAllocHandle(SQL_HANDLE_STMT,m_hdbc,
&m_hstmtNewOrder) != SQL_SUCCESS
			|| SQLAllocHandle(SQL_HANDLE_DESC,
m_hdbc, &m_descNewOrderCols1) != SQL_SUCCESS
			|| SQLAllocHandle(SQL_HANDLE_DESC,
m_hdbc, &m_descNewOrderCols2) != SQL_SUCCESS
			)
			ThrowError(CODBCERR::eAllocHandle);

		m_hstmt = m_hstmtNewOrder;

		if ( SQLSetStmtAttrW( m_hstmt,
SQL_ATTR_APP_ROW_DESC, m_descNewOrderCols1,
SQL_IS_POINTER ) != SQL_SUCCESS )
			ThrowError(CODBCERR::eSetStmtAttr);

		int i = 0;
		if (   SQLBindParameter(m_hstmt, ++i,
SQL_PARAM_INPUT, SQL_C_SLONG, SQL_INTEGER, 0, 0,
&m_txn.NewOrder.w_id, 0, NULL) != SQL_SUCCESS
			|| SQLBindParameter(m_hstmt, ++i,
SQL_PARAM_INPUT, SQL_C_UTINYINT, SQL_TINYINT, 0, 0,
&m_txn.NewOrder.d_id, 0, NULL) != SQL_SUCCESS
			|| SQLBindParameter(m_hstmt, ++i,
SQL_PARAM_INPUT, SQL_C_SLONG, SQL_INTEGER, 0, 0,
&m_txn.NewOrder.c_id, 0, NULL) != SQL_SUCCESS
			|| SQLBindParameter(m_hstmt, ++i,
SQL_PARAM_INPUT, SQL_C_UTINYINT, SQL_TINYINT, 0, 0,
&m_txn.NewOrder.o_ol_cnt, 0, NULL) != SQL_SUCCESS
			|| SQLBindParameter(m_hstmt, ++i,
SQL_PARAM_INPUT, SQL_C_UTINYINT, SQL_TINYINT, 0, 0,
&m_txn.NewOrder.o_all_local, 0, NULL) != SQL_SUCCESS
			)
			ThrowError(CODBCERR::eBindParam);

		for (int j=0; j<MAX_OL_NEW_ORDER_ITEMS; j++)
```

```
        {
                if (   SQLBindParameter(m_hstmt, ++i,
SQL_PARAM_INPUT, SQL_C_SLONG, SQL_INTEGER, 0, 0,
&m_txn.NewOrder.OL[j].ol_i_id, 0, NULL) != SQL_SUCCESS
                        || SQLBindParameter(m_hstmt, ++i,
SQL_PARAM_INPUT, SQL_C_SLONG, SQL_INTEGER, 0, 0,
&m_txn.NewOrder.OL[j].ol_supply_w_id, 0, NULL) !=
SQL_SUCCESS
                        || SQLBindParameter(m_hstmt, ++i,
SQL_PARAM_INPUT, SQL_C_SSHORT, SQL_SMALLINT, 0, 0,
&m_txn.NewOrder.OL[j].ol_quantity, 0, NULL) != SQL_SUCCESS
                        )

ThrowError(CODBCERR::eBindParam);
        }
#ifndef new_order_strstr
        // set the bind offset pointer
        if ( SQLSetStmtAttrW( m_hstmt,
SQL_ATTR_ROW_BIND_OFFSET_PTR,&m_BindOffset,
SQL_IS_POINTER ) != SQL_SUCCESS )
                ThrowError(CODBCERR::eSetStmtAttr);

        i = 0;
        if (   SQLBindCol(m_hstmt, ++i, SQL_C_CHAR,
&m_txn.NewOrder.OL[0].ol_i_name,
sizeof(m_txn.NewOrder.OL[0].ol_i_name), NULL) !=
SQL_SUCCESS
                || SQLBindCol(m_hstmt, ++i,
SQL_C_SSHORT, &m_txn.NewOrder.OL[0].ol_stock, 0, NULL) !=
SQL_SUCCESS
                || SQLBindCol(m_hstmt, ++i, SQL_C_CHAR,
&m_txn.NewOrder.OL[0].ol_brand_generic,
sizeof(m_txn.NewOrder.OL[0].ol_brand_generic), NULL) !=
SQL_SUCCESS
                || SQLBindCol(m_hstmt, ++i,
SQL_C_DOUBLE, &m_txn.NewOrder.OL[0].ol_i_price, 0, NULL) !=
SQL_SUCCESS
                || SQLBindCol(m_hstmt, ++i,
SQL_C_DOUBLE, &m_txn.NewOrder.OL[0].ol_amount, 0, NULL) !=
SQL_SUCCESS
                )
                ThrowError(CODBCERR::eBindCol);
#else
        // prototype to eliminate patindex in server; shift work to
client
        i = 0;
        if (   SQLBindCol(m_hstmt, ++i, SQL_C_CHAR,
&m_ol_i_name, sizeof(m_ol_i_name), NULL) != SQL_SUCCESS
                || SQLBindCol(m_hstmt, ++i,
SQL_C_SSHORT, &m_ol_stock, 0, NULL) != SQL_SUCCESS
                || SQLBindCol(m_hstmt, ++i, SQL_C_CHAR,
&m_i_data, sizeof(m_i_data), NULL) != SQL_SUCCESS
                || SQLBindCol(m_hstmt, ++i, SQL_C_CHAR,
&m_s_data, sizeof(m_s_data), NULL) != SQL_SUCCESS
                || SQLBindCol(m_hstmt, ++i,
SQL_C_DOUBLE, &m_ol_i_price, 0, NULL) != SQL_SUCCESS
                || SQLBindCol(m_hstmt, ++i,
SQL_C_DOUBLE, &m_ol_amount, 0, NULL) != SQL_SUCCESS
                )
                ThrowError(CODBCERR::eBindCol);
#endif

        // associate the column bindings for the second result set
        if ( SQLSetStmtAttrW( m_hstmt,
SQL_ATTR_APP_ROW_DESC, m_descNewOrderCols2,
SQL_IS_POINTER ) != SQL_SUCCESS )
                ThrowError(CODBCERR::eSetStmtAttr);

        i = 0;
        if (   SQLBindCol(m_hstmt, ++i, SQL_C_DOUBLE,
&m_txn.NewOrder.w_tax, 0, NULL) != SQL_SUCCESS
                || SQLBindCol(m_hstmt, ++i,
SQL_C_DOUBLE,   &m_txn.NewOrder.d_tax, 0, NULL) !=
SQL_SUCCESS
                || SQLBindCol(m_hstmt, ++i, SQL_C_SLONG,
  &m_txn.NewOrder.o_id, 0, NULL) != SQL_SUCCESS
                || SQLBindCol(m_hstmt, ++i, SQL_C_CHAR,
 &m_txn.NewOrder.c_last, sizeof(m_txn.NewOrder.c_last), NULL) !=
SQL_SUCCESS
                || SQLBindCol(m_hstmt, ++i,
SQL_C_DOUBLE,   &m_txn.NewOrder.c_discount, 0, NULL) !=
SQL_SUCCESS
                || SQLBindCol(m_hstmt, ++i, SQL_C_CHAR,
 &m_txn.NewOrder.c_credit, sizeof(m_txn.NewOrder.c_credit),
NULL) != SQL_SUCCESS
                || SQLBindCol(m_hstmt, ++i,
SQL_C_TYPE_TIMESTAMP, &m_txn.NewOrder.o_entry_d, 0,
NULL) != SQL_SUCCESS
                || SQLBindCol(m_hstmt, ++i, SQL_C_SLONG,
  &m_no_commit_flag, 0, NULL) != SQL_SUCCESS
                )
                ThrowError(CODBCERR::eBindCol);
}

void CTPCC_ODBC::NewOrder(BOOL fLocalFlag)
{
        int                                             i;
        RETCODE                                         rc;
        int
iTryCount = 0;

                                        // 0       1       2

                                        //
01234567890123456789012345678 9
        wchar_t
szSqlTemplate[] = L"{call tpcc_neworder(?,?,?,?,?,"

                                        L"?,?,?,?,?,?,?,?,?,?,?,?,?,?,"

                                        L"?,?,?,?,?,?,?,?,?,?,?,?,?,?,"

                                        L"?,?,?,?,?,?,?,?,?,?,?,?,?,?)}";

        m_hstmt = m_hstmtNewOrder;

        // associate the parameter and column bindings for this
transaction
        if ( SQLSetStmtAttrW( m_hstmt,
SQL_ATTR_APP_ROW_DESC, m_descNewOrderCols1,
SQL_IS_POINTER ) != SQL_SUCCESS )
                ThrowError(CODBCERR::eSetStmtAttr);

        // clip statement buffer based on number of parameters
        // fixed part is 29 chars and variable part is 6 chars per line
item
        i = 29 + m_txn.NewOrder.o_ol_cnt*6;
        wcscpy( &szSqlTemplate[i], L")}" );

        // check whether any order lines are for a remote warehouse
        m_txn.NewOrder.o_all_local = 1;
        for (i = 0; i < m_txn.NewOrder.o_ol_cnt; i++)
        {
                if (m_txn.NewOrder.OL[i].ol_supply_w_id !=
m_txn.NewOrder.w_id)
                {
```

```
                                m_txn.NewOrder.o_all_local = 0;  //
at least one remote warehouse
                                break;
                        }
                }

                while (TRUE)
                {
                        try
                        {
                                m_BindOffset = 0;
                                rc = SQLExecDirectW(m_hstmt,
(SQLWCHAR*)szSqlTemplate, SQL_NTS);
                                if (rc != SQL_SUCCESS && rc !=
SQL_SUCCESS_WITH_INFO)
                                {
#ifdef ErrTrace
                                        fprintf(errFile,"NewOrder
Error\nw_id: %d\nd_id: %d\nc_id: %d\nError:\n\n",

m_txn.NewOrder.w_id,

m_txn.NewOrder.d_id,

m_txn.NewOrder.c_id);
                                        fflush(errFile);

#endif


ThrowError(CODBCERR::eExecDirect);
                                }
                                // Get order line results
                                m_txn.NewOrder.total_amount = 0;
                                for (i = 0;
i<m_txn.NewOrder.o_ol_cnt; i++)
                                {
#ifndef new_order_strstr
                                        // set the bind offset
value...
                                        m_BindOffset = i *
sizeof(m_txn.NewOrder.OL[0]);

                                        if ( SQLFetch(m_hstmt)
== SQL_ERROR)

ThrowError(CODBCERR::eFetch);
#else
                                        if ( SQLFetch(m_hstmt)
== SQL_ERROR)

ThrowError(CODBCERR::eFetch);

                                        strcpy(
m_txn.NewOrder.OL[i].ol_i_name, m_ol_i_name );

                                        if ( strstr(m_i_data,
"ORIGINAL") != NULL &&strstr(m_s_data, "ORIGINAL") != NULL
)

m_txn.NewOrder.OL[i].ol_brand_generic[0] = 'B';
                                        else

m_txn.NewOrder.OL[i].ol_brand_generic[0] = 'G';

m_txn.NewOrder.OL[i].ol_brand_generic[1] = 0;

m_txn.NewOrder.OL[i].ol_stock                   = m_ol_stock;

m_txn.NewOrder.OL[i].ol_i_price                 =
m_ol_i_price;

m_txn.NewOrder.OL[i].ol_amount                  =
m_ol_amount;
#endif

                                        // move to the next
resultset
                                        if (
SQLMoreResults(m_hstmt) == SQL_ERROR )

ThrowError(CODBCERR::eMoreResults);


m_txn.NewOrder.total_amount += m_txn.NewOrder.OL[i].ol_amount;
                                }

                                // associate the column bindings for
the second result set
                                if ( SQLSetStmtAttrW( m_hstmt,
SQL_ATTR_APP_ROW_DESC, m_descNewOrderCols2,
SQL_IS_POINTER ) != SQL_SUCCESS )

ThrowError(CODBCERR::eSetStmtAttr);

                                if ( SQLFetch(m_hstmt) ==
SQL_ERROR)

ThrowError(CODBCERR::eFetch);

                                SQLFreeStmt(m_hstmt,
SQL_CLOSE);

                                if (m_no_commit_flag == 1)
                                {

m_txn.NewOrder.total_amount *= ((1 + m_txn.NewOrder.w_tax +
m_txn.NewOrder.d_tax) * (1 - m_txn.NewOrder.c_discount));

m_txn.NewOrder.exec_status_code = eOK;
                                }
                                else

m_txn.NewOrder.exec_status_code = eInvalidItem;

                                break;
                        }
                        catch (CODBCERR *e)
                        {
                                if ((!e->m_bDeadLock) ||
(++iTryCount > iMaxRetries))
                                        throw;

                                // hit deadlock; backoff for
increasingly longer period
                                delete e;
                                Sleep(10 * iTryCount);
                        }
                }

//              if (iTryCount)
//                      throw new
```

```
CTPCC_ODBC_ERR(CTPCC_ODBC_ERR::ERR_RETRIED_TRANS, iTryCount);
}

void CTPCC_ODBC::InitPaymentParams()
{
        if ( SQLAllocHandle(SQL_HANDLE_STMT,m_hdbc, &m_hstmtPayment) != SQL_SUCCESS )
                ThrowError(CODBCERR::eAllocHandle);

        m_hstmt = m_hstmtPayment;

        int i = 0;
        if ( SQLBindParameter(m_hstmt, ++i, SQL_PARAM_INPUT, SQL_C_SLONG, SQL_INTEGER, 0, 0, &m_txn.Payment.w_id, 0, NULL) != SQL_SUCCESS
                || SQLBindParameter(m_hstmt, ++i, SQL_PARAM_INPUT, SQL_C_SLONG, SQL_INTEGER, 0, 0, &m_txn.Payment.c_w_id, 0, NULL) != SQL_SUCCESS
                || SQLBindParameter(m_hstmt, ++i, SQL_PARAM_INPUT, SQL_C_DOUBLE, SQL_NUMERIC, 6, 2, &m_txn.Payment.h_amount, 0, NULL) != SQL_SUCCESS
                || SQLBindParameter(m_hstmt, ++i, SQL_PARAM_INPUT, SQL_C_UTINYINT, SQL_TINYINT, 0, 0, &m_txn.Payment.d_id, 0, NULL) != SQL_SUCCESS
                || SQLBindParameter(m_hstmt, ++i, SQL_PARAM_INPUT, SQL_C_UTINYINT, SQL_TINYINT, 0, 0, &m_txn.Payment.c_d_id, 0, NULL) != SQL_SUCCESS
                || SQLBindParameter(m_hstmt, ++i, SQL_PARAM_INPUT, SQL_C_SLONG, SQL_INTEGER, 0, 0, &m_txn.Payment.c_id, 0, NULL) != SQL_SUCCESS
                || SQLBindParameter(m_hstmt, ++i, SQL_PARAM_INPUT, SQL_C_CHAR, SQL_CHAR, sizeof(m_txn.Payment.c_last), 0, &m_txn.Payment.c_last, sizeof(m_txn.Payment.c_last), NULL) != SQL_SUCCESS
                )
                ThrowError(CODBCERR::eBindParam);

        i = 0;
        if ( SQLBindCol(m_hstmt, ++i, SQL_C_SLONG, &m_txn.Payment.c_id,                 0, NULL) != SQL_SUCCESS
                || SQLBindCol(m_hstmt, ++i, SQL_C_CHAR, &m_txn.Payment.c_last, sizeof(m_txn.Payment.c_last), NULL) != SQL_SUCCESS
                || SQLBindCol(m_hstmt, ++i, SQL_C_TYPE_TIMESTAMP, &m_txn.Payment.h_date, 0, NULL) != SQL_SUCCESS
                || SQLBindCol(m_hstmt, ++i, SQL_C_CHAR, &m_txn.Payment.w_street_1, sizeof(m_txn.Payment.w_street_1), NULL) != SQL_SUCCESS
                || SQLBindCol(m_hstmt, ++i, SQL_C_CHAR, &m_txn.Payment.w_street_2, sizeof(m_txn.Payment.w_street_2), NULL) != SQL_SUCCESS
                || SQLBindCol(m_hstmt, ++i, SQL_C_CHAR, &m_txn.Payment.w_city, sizeof(m_txn.Payment.w_city), NULL) != SQL_SUCCESS
                || SQLBindCol(m_hstmt, ++i, SQL_C_CHAR, &m_txn.Payment.w_state, sizeof(m_txn.Payment.w_state), NULL) != SQL_SUCCESS
                || SQLBindCol(m_hstmt, ++i, SQL_C_CHAR, &m_txn.Payment.w_zip, sizeof(m_txn.Payment.w_zip), NULL) != SQL_SUCCESS
                || SQLBindCol(m_hstmt, ++i, SQL_C_CHAR, &m_txn.Payment.d_street_1, sizeof(m_txn.Payment.d_street_1), NULL) != SQL_SUCCESS
                || SQLBindCol(m_hstmt, ++i, SQL_C_CHAR, &m_txn.Payment.d_street_2, sizeof(m_txn.Payment.d_street_2), NULL) != SQL_SUCCESS
                || SQLBindCol(m_hstmt, ++i, SQL_C_CHAR, &m_txn.Payment.d_city, sizeof(m_txn.Payment.d_city), NULL) != SQL_SUCCESS
                || SQLBindCol(m_hstmt, ++i, SQL_C_CHAR, &m_txn.Payment.d_state, sizeof(m_txn.Payment.d_state), NULL) != SQL_SUCCESS
                || SQLBindCol(m_hstmt, ++i, SQL_C_CHAR, &m_txn.Payment.d_zip, sizeof(m_txn.Payment.d_zip), NULL) != SQL_SUCCESS
                || SQLBindCol(m_hstmt, ++i, SQL_C_CHAR, &m_txn.Payment.c_first, sizeof(m_txn.Payment.c_first), NULL) != SQL_SUCCESS
                || SQLBindCol(m_hstmt, ++i, SQL_C_CHAR, &m_txn.Payment.c_middle, sizeof(m_txn.Payment.c_middle), NULL) != SQL_SUCCESS
                || SQLBindCol(m_hstmt, ++i, SQL_C_CHAR, &m_txn.Payment.c_street_1, sizeof(m_txn.Payment.c_street_1), NULL) != SQL_SUCCESS
                || SQLBindCol(m_hstmt, ++i, SQL_C_CHAR, &m_txn.Payment.c_street_2, sizeof(m_txn.Payment.c_street_2), NULL) != SQL_SUCCESS
                || SQLBindCol(m_hstmt, ++i, SQL_C_CHAR, &m_txn.Payment.c_city, sizeof(m_txn.Payment.c_city), NULL) != SQL_SUCCESS
                || SQLBindCol(m_hstmt, ++i, SQL_C_CHAR, &m_txn.Payment.c_state, sizeof(m_txn.Payment.c_state), NULL) != SQL_SUCCESS
                || SQLBindCol(m_hstmt, ++i, SQL_C_CHAR, &m_txn.Payment.c_zip, sizeof(m_txn.Payment.c_zip), NULL) != SQL_SUCCESS
                || SQLBindCol(m_hstmt, ++i, SQL_C_CHAR, &m_txn.Payment.c_phone, sizeof(m_txn.Payment.c_phone), NULL) != SQL_SUCCESS
                || SQLBindCol(m_hstmt, ++i, SQL_C_TYPE_TIMESTAMP, &m_txn.Payment.c_since, 0, NULL) != SQL_SUCCESS
                || SQLBindCol(m_hstmt, ++i, SQL_C_CHAR, &m_txn.Payment.c_credit, sizeof(m_txn.Payment.c_credit), NULL) != SQL_SUCCESS
                || SQLBindCol(m_hstmt, ++i, SQL_C_DOUBLE, &m_txn.Payment.c_credit_lim,0, NULL) != SQL_SUCCESS
                || SQLBindCol(m_hstmt, ++i, SQL_C_DOUBLE, &m_txn.Payment.c_discount,    0, NULL) != SQL_SUCCESS
                || SQLBindCol(m_hstmt, ++i, SQL_C_DOUBLE, &m_txn.Payment.c_balance,     0, NULL) != SQL_SUCCESS
                || SQLBindCol(m_hstmt, ++i, SQL_C_CHAR, &m_txn.Payment.c_data, sizeof(m_txn.Payment.c_data), NULL) != SQL_SUCCESS
                )
                ThrowError(CODBCERR::eBindCol);
}

void CTPCC_ODBC::Payment(BOOL fLocalFlag)
{
        RETCODE                 rc;
        int                     iTryCount = 0;

        m_hstmt = m_hstmtPayment;

        if (m_txn.Payment.c_id != 0)
                m_txn.Payment.c_last[0] = 0;
```

```
	while (TRUE)
	{
		try
		{
			rc = SQLExecDirectW(m_hstmt,
(SQLWCHAR*)L"{call tpcc_payment(?,?,?,?,?,?,?)}", SQL_NTS);
			if (rc != SQL_SUCCESS && rc !=
SQL_SUCCESS_WITH_INFO)
			{
#ifdef ErrTrace
				fprintf(errFile,"Payment
Error\n w_id: %d\nc_w_id: %d\nc_id: %d\nc_last: %s\nd_id:
%d\nc_d_id: %d\nError:\n",

m_txn.Payment.w_id,

m_txn.Payment.c_w_id,

m_txn.Payment.c_id,

m_txn.Payment.c_last,

m_txn.Payment.d_id,

m_txn.Payment.c_d_id);
				fflush(errFile);

#endif


ThrowError(CODBCERR::eExecDirect);
			}
			if ( SQLFetch(m_hstmt) ==
SQL_ERROR)

ThrowError(CODBCERR::eFetch);

			SQLFreeStmt(m_hstmt,
SQL_CLOSE);

			if (m_txn.Payment.c_id == 0)
				throw new
CTPCC_ODBC_ERR( CTPCC_ODBC_ERR::ERR_INVALID_CUST
);
			else

m_txn.Payment.exec_status_code = eOK;

			break;
		}
		catch (CODBCERR *e)
		{
			if ((!e->m_bDeadLock) ||
(++iTryCount > iMaxRetries))
				throw;

			// hit deadlock; backoff for
increasingly longer period
			delete e;
			Sleep(10 * iTryCount);
		}
	}

//	if (iTryCount)
//		throw new

CTPCC_ODBC_ERR(CTPCC_ODBC_ERR::ERR_RETRIED_TRAN
S, iTryCount);
}

void CTPCC_ODBC::InitOrderStatusParams()
{
	if (   SQLAllocHandle(SQL_HANDLE_STMT,m_hdbc,
&m_hstmtOrderStatus) != SQL_SUCCESS
		|| SQLAllocHandle(SQL_HANDLE_DESC,
m_hdbc, &m_descOrderStatusCols1) != SQL_SUCCESS
		|| SQLAllocHandle(SQL_HANDLE_DESC,
m_hdbc, &m_descOrderStatusCols2) != SQL_SUCCESS
		)
		ThrowError(CODBCERR::eAllocHandle);

	m_hstmt = m_hstmtOrderStatus;

	if (   SQLSetStmtAttrW( m_hstmt,
SQL_ATTR_APP_ROW_DESC, m_descOrderStatusCols1,
SQL_IS_POINTER ) != SQL_SUCCESS )
		ThrowError(CODBCERR::eSetStmtAttr);

	int i = 0;
	if (   SQLBindParameter(m_hstmt, ++i,
SQL_PARAM_INPUT, SQL_C_SLONG, SQL_INTEGER, 0, 0,
&m_txn.OrderStatus.w_id, 0, NULL) != SQL_SUCCESS
		|| SQLBindParameter(m_hstmt, ++i,
SQL_PARAM_INPUT, SQL_C_UTINYINT, SQL_TINYINT, 0, 0,
&m_txn.OrderStatus.d_id, 0, NULL) != SQL_SUCCESS
		|| SQLBindParameter(m_hstmt, ++i,
SQL_PARAM_INPUT, SQL_C_SLONG, SQL_INTEGER, 0, 0,
&m_txn.OrderStatus.c_id, 0, NULL) != SQL_SUCCESS
		|| SQLBindParameter(m_hstmt, ++i,
SQL_PARAM_INPUT, SQL_C_CHAR, SQL_CHAR,
sizeof(m_txn.OrderStatus.c_last), 0, &m_txn.OrderStatus.c_last,
sizeof(m_txn.OrderStatus.c_last), NULL) != SQL_SUCCESS
		)
		ThrowError(CODBCERR::eBindParam);

	// configure block cursor
	if (   SQLSetStmtAttrW(m_hstmt,
SQL_ATTR_ROW_BIND_TYPE,
(SQLPOINTER)sizeof(m_txn.OrderStatus.OL[0]), 0) !=
SQL_SUCCESS
		|| SQLSetStmtAttrW(m_hstmt,
SQL_ATTR_ROWS_FETCHED_PTR, &m_RowsFetched, 0) !=
SQL_SUCCESS
		)
		ThrowError(CODBCERR::eSetStmtAttr);

	i = 0;
	if (   SQLBindCol(m_hstmt, ++i, SQL_C_SLONG,
&m_txn.OrderStatus.OL[0].ol_supply_w_id, 0, NULL) !=
SQL_SUCCESS
		|| SQLBindCol(m_hstmt, ++i, SQL_C_SLONG,
&m_txn.OrderStatus.OL[0].ol_i_id, 0, NULL) != SQL_SUCCESS
		|| SQLBindCol(m_hstmt, ++i,
SQL_C_SSHORT, &m_txn.OrderStatus.OL[0].ol_quantity, 0, NULL)
!= SQL_SUCCESS
		|| SQLBindCol(m_hstmt, ++i,
SQL_C_DOUBLE, &m_txn.OrderStatus.OL[0].ol_amount, 0, NULL)
!= SQL_SUCCESS
		|| SQLBindCol(m_hstmt, ++i,
SQL_C_TYPE_TIMESTAMP,
&m_txn.OrderStatus.OL[0].ol_delivery_d, 0, NULL) !=
SQL_SUCCESS
		)
		ThrowError(CODBCERR::eBindCol);
```

```
	if ( SQLSetStmtAttrW( m_hstmt,
SQL_ATTR_APP_ROW_DESC, m_descOrderStatusCols2,
SQL_IS_POINTER ) != SQL_SUCCESS )
		ThrowError(CODBCERR::eSetStmtAttr);

	i = 0;
	if (   SQLBindCol(m_hstmt, ++i, SQL_C_SLONG,
&m_txn.OrderStatus.c_id, 0, NULL) != SQL_SUCCESS
		|| SQLBindCol(m_hstmt, ++i, SQL_C_CHAR,
&m_txn.OrderStatus.c_last, sizeof(m_txn.OrderStatus.c_last), NULL)
!= SQL_SUCCESS
		|| SQLBindCol(m_hstmt, ++i, SQL_C_CHAR,
&m_txn.OrderStatus.c_first, sizeof(m_txn.OrderStatus.c_first), NULL)
!= SQL_SUCCESS
		|| SQLBindCol(m_hstmt, ++i, SQL_C_CHAR,
&m_txn.OrderStatus.c_middle, sizeof(m_txn.OrderStatus.c_middle),
NULL) != SQL_SUCCESS
		|| SQLBindCol(m_hstmt, ++i,
SQL_C_TYPE_TIMESTAMP, &m_txn.OrderStatus.o_entry_d, 0,
NULL) != SQL_SUCCESS
		|| SQLBindCol(m_hstmt, ++i,
SQL_C_SSHORT, &m_txn.OrderStatus.o_carrier_id, 0, NULL) !=
SQL_SUCCESS
		|| SQLBindCol(m_hstmt, ++i,
SQL_C_DOUBLE, &m_txn.OrderStatus.c_balance, 0, NULL) !=
SQL_SUCCESS
		|| SQLBindCol(m_hstmt, ++i, SQL_C_SLONG,
&m_txn.OrderStatus.o_id, 0, NULL) != SQL_SUCCESS
		)
		ThrowError(CODBCERR::eBindCol);
}

void CTPCC_ODBC::OrderStatus()
{
	int
iTryCount = 0;
	RETCODE
rc;

	m_hstmt = m_hstmtOrderStatus;

	if ( SQLSetStmtAttrW( m_hstmt,
SQL_ATTR_APP_ROW_DESC, m_descOrderStatusCols1,
SQL_IS_POINTER ) != SQL_SUCCESS )
		ThrowError(CODBCERR::eSetStmtAttr);

	if (m_txn.OrderStatus.c_id != 0)
		m_txn.OrderStatus.c_last[0] = 0;

	while (TRUE)
	{
		try
		{
			// configure block cursor
			if ( SQLSetStmtAttrW(m_hstmt,
SQL_ATTR_ROW_ARRAY_SIZE, (SQLPOINTER)1, 0) !=
SQL_SUCCESS )

ThrowError(CODBCERR::eSetStmtAttr);

			rc = SQLExecDirectW(m_hstmt,
(SQLWCHAR*)L"{call tpcc_orderstatus(?,?,?,?)}", SQL_NTS);
			if ( ((rc ==
SQL_SUCCESS_WITH_INFO) && (m_RowsFetched != 0)) || (rc ==
SQL_ERROR) )
			{
#ifdef ErrTrace
				fprintf(errFile,"Order
Status\n w_id: %d\nc_id: %d\nc_last: %s\nd_id: %d\nError:\n",

m_txn.OrderStatus.w_id,

m_txn.OrderStatus.c_id,

m_txn.OrderStatus.c_last,

m_txn.OrderStatus.d_id);
				fflush(errFile);

#endif


ThrowError(CODBCERR::eExecDirect);
			}

			// configure block cursor
			if ( SQLSetStmtAttrW(m_hstmt,
SQL_ATTR_ROW_ARRAY_SIZE,
(SQLPOINTER)MAX_OL_ORDER_STATUS_ITEMS,0) !=
SQL_SUCCESS )

ThrowError(CODBCERR::eSetStmtAttr);

			rc = SQLFetchScroll( m_hstmt,
SQL_FETCH_NEXT, 0 );
			if ( ((rc ==
SQL_SUCCESS_WITH_INFO) && (m_RowsFetched != 0)) || (rc ==
SQL_ERROR) )

ThrowError(CODBCERR::eFetchScroll);

			m_txn.OrderStatus.o_ol_cnt =
(short)m_RowsFetched;

			if (m_txn.OrderStatus.o_ol_cnt != 0)
			{
				if ( SQLSetStmtAttrW(
m_hstmt, SQL_ATTR_APP_ROW_DESC, m_descOrderStatusCols2,
SQL_IS_POINTER ) != SQL_SUCCESS )

ThrowError(CODBCERR::eSetStmtAttr);

				if (
SQLMoreResults(m_hstmt) == SQL_ERROR )

ThrowError(CODBCERR::eMoreResults);

				if ( (rc =
SQLFetch(m_hstmt)) == SQL_ERROR)

ThrowError(CODBCERR::eFetch);
			}

			SQLFreeStmt(m_hstmt,
SQL_CLOSE);

			if (m_txn.OrderStatus.o_ol_cnt == 0)
				throw new
CTPCC_ODBC_ERR(
CTPCC_ODBC_ERR::ERR_NO_SUCH_ORDER );
			else if (m_txn.OrderStatus.c_id == 0
&& m_txn.OrderStatus.c_last[0] == 0)
				throw new
CTPCC_ODBC_ERR( CTPCC_ODBC_ERR::ERR_INVALID_CUST
);
```

```
                                else

m_txn.OrderStatus.exec_status_code = eOK;

                                break;
                        }
                        catch (CODBCERR *e)
                        {
                                if ((!e->m_bDeadLock) ||
(++iTryCount > iMaxRetries))
                                        throw;

                                // hit deadlock; backoff for
increasingly longer period
                                delete e;
                                Sleep(10 * iTryCount);
                        }
        }

//      if (iTryCount)
//              throw new

CTPCC_ODBC_ERR(CTPCC_ODBC_ERR::ERR_RETRIED_TRANS, iTryCount);
}

void CTPCC_ODBC::InitDeliveryParams()
{
        if (   SQLAllocHandle(SQL_HANDLE_STMT,m_hdbc,
&m_hstmtDelivery) != SQL_SUCCESS )
                ThrowError(CODBCERR::eAllocHandle);

        m_hstmt = m_hstmtDelivery;

        int i = 0;
        if (   SQLBindParameter(m_hstmt, ++i,
SQL_PARAM_INPUT, SQL_C_SLONG, SQL_INTEGER, 0, 0,
&m_txn.Delivery.w_id, 0, NULL) != SQL_SUCCESS
                || SQLBindParameter(m_hstmt, ++i,
SQL_PARAM_INPUT, SQL_C_SSHORT, SQL_SMALLINT, 0, 0,
&m_txn.Delivery.o_carrier_id, 0, NULL) != SQL_SUCCESS
                )
                ThrowError(CODBCERR::eBindParam);

        for (i=0;i<10;i++)
        {
                if ( SQLBindCol(m_hstmt, (UWORD)(i+1),
SQL_C_SLONG, &m_txn.Delivery.o_id[i], 0, NULL) !=
SQL_SUCCESS )

ThrowError(CODBCERR::eBindCol);
        }
}

void CTPCC_ODBC::Delivery()
{
        RETCODE                         rc;
        int                             iTryCount = 0;

        m_hstmt = m_hstmtDelivery;

        while (TRUE)
        {
                try
                {
                        rc = SQLExecDirectW(m_hstmt,
(SQLWCHAR*)L"{call tpcc_delivery(?,?)}", SQL_NTS);
                        if (rc != SQL_SUCCESS && rc !=
SQL_SUCCESS_WITH_INFO)

ThrowError(CODBCERR::eExecDirect);

                        if ( SQLFetch(m_hstmt) ==
SQL_ERROR )

ThrowError(CODBCERR::eFetch);

                        SQLFreeStmt(m_hstmt,
SQL_CLOSE);
                        m_txn.Delivery.exec_status_code =
eOK;
                        break;
                }
                catch (CODBCERR *e)
                {
                        if ((!e->m_bDeadLock) ||
(++iTryCount > iMaxRetries))
                                throw;

                        // hit deadlock; backoff for
increasingly longer period
                        delete e;
                        Sleep(10 * iTryCount);
                }
        }

//      if (iTryCount)
//              throw new

CTPCC_ODBC_ERR(CTPCC_ODBC_ERR::ERR_RETRIED_TRANS, iTryCount);
}
```

tpcc_odbc.h

```
/*      FILE:           TPCC_ODBC.H
 *                              Microsoft TPC-C Kit Ver.
4.20.000
 *                              Copyright Microsoft,
1999
 *      All Rights Reserved
 *
 *                              Version 4.10.000 audited
by Richard Gimarc, Performance Metrics, 3/17/99
 *
 *      PURPOSE:        Header file for TPC-C txn class
implementation.
 *
 *  Change history:
 *              4.20.000 - updated rev number to match kit
 */
#pragma once

// need to declare functions for import, unless define has already been
created
// by the DLL's .cpp module for export.
#ifndef DllDecl
#define DllDecl  __declspec( dllimport )
#endif

class CODBCERR : public CBaseErr
{
        public:
```

```
                enum ACTION
                {
                        eNone,
                        eUnknown,
                        eAllocConn,
// error from SQLAllocConnect
                        eAllocHandle,           //
error from SQLAllocHandle
                        eConnOption,            //
error from SQLSetConnectOption
                        eConnect,               //
error from SQLConnect
                        eAllocStmt,
// error from SQLAllocStmt
                        eExecDirect,            //
error from SQLExecDirect
                        eBindParam,
// error from SQLBindParameter
                        eBindCol,               //
error from SQLBindCol
                        eFetch,
// error from SQLFetch
                        eFetchScroll,           //
error from SQLFetchScroll
                        eMoreResults,           //
error from SQLMoreResults
                        ePrepare,               //
error from SQLPrepare
                        eExecute,               //
error from SQLExecute
                        eSetEnvAttr,            //
error from SQLSetEnvAttr
                        eSetStmtAttr            //
error from SQLSetStmtAttr
                };

                CODBCERR(void)
                {
                        m_eAction = eNone;
                        m_NativeError = 0;
                        m_bDeadLock = FALSE;
                        m_odbcerrstr = NULL;
                };

                ~CODBCERR()
                {
                        if (m_odbcerrstr != NULL)
                                delete [] m_odbcerrstr;
                };

                ACTION  m_eAction;
                int             m_NativeError;
                BOOL    m_bDeadLock;
                char   *m_odbcerrstr;

                int ErrorType() {return ERR_TYPE_ODBC;};
                int ErrorNum() {return m_NativeError;};
                char *ErrorText() {return m_odbcerrstr;};

};

class CTPCC_ODBC_ERR : public CBaseErr
{
        public:
                enum TPCC_ODBC_ERRS
                {
                        ERR_WRONG_SP_VERSION = 1,
// "Wrong version of stored procs on database server"
                        ERR_INVALID_CUST,
        // "Invalid Customer id,name."
                        ERR_NO_SUCH_ORDER,
        // "No orders found for customer."
                        ERR_RETRIED_TRANS,
        // "Retries before transaction succeeded."
                };

                CTPCC_ODBC_ERR( int iErr ) { m_errno =
iErr; m_iTryCount = 0; };

                CTPCC_ODBC_ERR( int iErr, int iTryCount ) {
m_errno = iErr; m_iTryCount = iTryCount; };

                int             m_errno;
                int             m_iTryCount;

                int ErrorType() {return
ERR_TYPE_TPCC_ODBC;};
                int ErrorNum() {return m_errno;};

                char *ErrorText();
};

class DllDecl CTPCC_ODBC : public CTPCC_BASE
{
        private:
                // declare variables and private functions here...
                BOOL            m_bDeadlock;
// transaction was selected as deadlock victim
                int                             m_MaxRetries;
        // retry count on deadlock

                SQLHENV                 m_henv;
                // ODBC environment handle
                SQLHDBC                 m_hdbc;
                SQLHSTMT        m_hstmt;
// the current hstmt

                SQLHSTMT        m_hstmtNewOrder;
                SQLHSTMT        m_hstmtPayment;
                SQLHSTMT        m_hstmtDelivery;
                SQLHSTMT        m_hstmtOrderStatus;
                SQLHSTMT        m_hstmtStockLevel;

                SQLHDESC        m_descNewOrderCols1;
                SQLHDESC        m_descNewOrderCols2;
                SQLHDESC        m_descOrderStatusCols1;
                SQLHDESC        m_descOrderStatusCols2;

                // new-order specific fields
                SQLUINTEGER     m_BindOffset;
                SQLUINTEGER     m_RowsFetched;
                int
m_no_commit_flag;

#ifdef new_order_strstr
                // for new-order txn;
                // output params
                char
m_ol_i_name[I_NAME_LEN+1];
                double          m_ol_i_price;
                double          m_ol_amount;
                short           m_ol_stock;
                // used locally, but not returned to caller
                char            m_i_data[I_DATA_LEN];
                char
m_s_data[S_DATA_LEN];
```

```
#endif
                    void ThrowError( CODBCERR::ACTION
eAction );

                    void InitNewOrderParams();
                    void InitPaymentParams();
                    void InitDeliveryParams();
                    void InitStockLevelParams();
                    void InitOrderStatusParams();

                    union
                    {
                              NEW_ORDER_DATA
NewOrder;
                              PAYMENT_DATA
Payment;
                              DELIVERY_DATA
Delivery;
                              STOCK_LEVEL_DATA
StockLevel;
                              ORDER_STATUS_DATA
OrderStatus;
                    }                         m_txn;

          public:
                    CTPCC_ODBC(LPCSTR szServer, LPCSTR
szUser, LPCSTR szPassword, LPCSTR szHost, LPCSTR szDatabase);
                    ~CTPCC_ODBC(void);

                    inline PNEW_ORDER_DATA
BuffAddr_NewOrder()               { return
&m_txn.NewOrder;  };
                    inline PPAYMENT_DATA
BuffAddr_Payment()          { return &m_txn.Payment;    };
                    inline PDELIVERY_DATA
BuffAddr_Delivery()         { return &m_txn.Delivery;   };
                    inline PSTOCK_LEVEL_DATA
BuffAddr_StockLevel()       { return &m_txn.StockLevel; };
                    inline PORDER_STATUS_DATA
BuffAddr_OrderStatus()      { return &m_txn.OrderStatus; };

                    void NewOrder             (BOOL
fLocalFlag);
                    void Payment              (BOOL
fLocalFlag);
                    void Delivery             ();
                    void StockLevel           ();
                    void OrderStatus    ();

};


// wrapper routine for class constructor
extern "C" DllDecl CTPCC_ODBC* CTPCC_ODBC_new
          ( LPCSTR szServer, LPCSTR szUser, LPCSTR
szPassword, LPCSTR szHost, LPCSTR szDatabase );

typedef CTPCC_ODBC* (TYPE_CTPCC_ODBC)(LPCSTR,
LPCSTR, LPCSTR, LPCSTR, LPCSTR);
```

trans.h

```
/*          FILE:               TRANS.H
 *                                        Microsoft TPC-C Kit Ver.
4.30.002
 *                                        Copyright Microsoft,
1999
 *          All Rights Reserved
 *
 *                                        Version 4.10.000 audited
by Richard Gimarc, Performance Metrics, 3/17/99
 *
 *          PURPOSE:            Header file for TPC-C structure
templates.
 *
 *  Change history:
 *                    4.30.002 - changed w_id from short to long to
support warehouses above 32,767
 *                    4.20.000 - updated rev number to match kit
 */
#pragma once

// String length constants
#define SERVER_NAME_LEN          20
#define DATABASE_NAME_LEN        20
#define USER_NAME_LEN            20
#define PASSWORD_LEN             20
#define TABLE_NAME_LEN           20
#define I_DATA_LEN               50
#define I_NAME_LEN               24
#define BRAND_LEN                1
#define LAST_NAME_LEN            16
#define W_NAME_LEN               10
#define ADDRESS_LEN              20
#define STATE_LEN                2
#define ZIP_LEN                  9
#define S_DIST_LEN               24
#define S_DATA_LEN               50
#define D_NAME_LEN               10
#define FIRST_NAME_LEN           16
#define MIDDLE_NAME_LEN          2
#define PHONE_LEN                16
#define DATETIME_LEN             30
#define CREDIT_LEN               2
#define C_DATA_LEN               250
#define H_DATA_LEN               24
#define DIST_INFO_LEN            24
#define MAX_OL_NEW_ORDER_ITEMS   15
#define MAX_OL_ORDER_STATUS_ITEMS 15
#define STATUS_LEN               25
#define OL_DIST_INFO_LEN                  24

// TIMESTAMP_STRUCT is provided by the ODBC header file
sqltypes.h, but is not available
// when compiling with dblib, so redefined here.  Note: we are using
the symbol "__SQLTYPES"
// (declared in sqltypes.h) as a way to determine if
TIMESTAMP_STRUCT has been declared.
#ifndef __SQLTYPES
          typedef struct
          {
                    short                         /*
SQLSMALLINT*/    year;
                    unsigned short          /*
SQLUSMALLINT*/ month;
                    unsigned short          /*
SQLUSMALLINT*/ day;
                    unsigned short          /*
SQLUSMALLINT*/ hour;
                    unsigned short          /*
SQLUSMALLINT*/ minute;
                    unsigned short          /*
SQLUSMALLINT*/ second;
```

```
                                unsigned long       /*
SQLUINTEGER */    fraction;
        } TIMESTAMP_STRUCT;
#endif

// possible values for exec_status_code after transaction completes
enum EXEC_STATUS
{
        eOK,                            // 0        "Transaction
commited."
        eInvalidItem,           // 1        "Item number is not
valid."
        eDeliveryFailed         // 2        "Delivery Post Failed."
};

// transaction structures
typedef struct
{
        // input params
        long
ol_supply_w_id;
        long                                    ol_i_id;
        short                                   ol_quantity;

        // output params
        char
ol_i_name[I_NAME_LEN+1];
        char
ol_brand_generic[BRAND_LEN+1];
        double                                  ol_i_price;
        double                                  ol_amount;
        short                                   ol_stock;
} OL_NEW_ORDER_DATA;

typedef struct
{
        // input params
        long            w_id;
        short           d_id;
        long            c_id;
        short           o_ol_cnt;

        // output params
        EXEC_STATUS
exec_status_code;
        char            c_last[LAST_NAME_LEN+1];
        char            c_credit[CREDIT_LEN+1];
        double          c_discount;
        double          w_tax;
        double          d_tax;
        long                    o_id;
        short
o_commit_flag;
        TIMESTAMP_STRUCT        o_entry_d;
        short           o_all_local;
        double          total_amount;
        OL_NEW_ORDER_DATA
OL[MAX_OL_NEW_ORDER_ITEMS];
} NEW_ORDER_DATA, *PNEW_ORDER_DATA;

typedef struct
{       // input params
        long                            w_id;
        short                           d_id;
        long                            c_id;
        short                           c_d_id;
        long                            c_w_id;
        double                          h_amount;
        char                    c_last[LAST_NAME_LEN+1];

        // output params
        EXEC_STATUS
exec_status_code;
        TIMESTAMP_STRUCT        h_date;
        char
w_street_1[ADDRESS_LEN+1];
        char
w_street_2[ADDRESS_LEN+1];
        char
w_city[ADDRESS_LEN+1];
        char
w_state[STATE_LEN+1];
        char                            w_zip[ZIP_LEN+1];
        char
d_street_1[ADDRESS_LEN+1];
        char
d_street_2[ADDRESS_LEN+1];
        char
d_city[ADDRESS_LEN+1];
        char                            d_state[STATE_LEN+1];
        char                    d_zip[ZIP_LEN+1];
        char
c_first[FIRST_NAME_LEN+1];
        char
c_middle[MIDDLE_NAME_LEN + 1];
        char
c_street_1[ADDRESS_LEN+1];
        char
c_street_2[ADDRESS_LEN+1];
        char
c_city[ADDRESS_LEN+1];
        char                            c_state[STATE_LEN+1];
        char                            c_zip[ZIP_LEN+1];
        char
c_phone[PHONE_LEN+1];
        TIMESTAMP_STRUCT        c_since;
        char
c_credit[CREDIT_LEN+1];
        double                          c_credit_lim;
        double                          c_discount;
        double                          c_balance;
        char                            c_data[200+1];
} PAYMENT_DATA, *PPAYMENT_DATA;

typedef struct
{
        long                            ol_i_id;
        long                            ol_supply_w_id;
        short                           ol_quantity;
        double                          ol_amount;
        TIMESTAMP_STRUCT        ol_delivery_d;
} OL_ORDER_STATUS_DATA;

typedef struct
{       // input params
        long            w_id;
        short           d_id;
        long            c_id;
        char            c_last[LAST_NAME_LEN+1];

        // output params
        EXEC_STATUS
exec_status_code;
        char            c_first[FIRST_NAME_LEN+1];
        char            c_middle[MIDDLE_NAME_LEN+1];
        double           c_balance;
```

```
        long            o_id;
        TIMESTAMP_STRUCT        o_entry_d;
        short           o_carrier_id;
        OL_ORDER_STATUS_DATA
OL[MAX_OL_ORDER_STATUS_ITEMS];
        short           o_ol_cnt;
} ORDER_STATUS_DATA, *PORDER_STATUS_DATA;


typedef struct
{       // input params
        long                    w_id;
        short                   o_carrier_id;

        // output params
        EXEC_STATUS
exec_status_code;
        SYSTEMTIME                      queue_time;
        long                                    o_id[10];
// id's of delivered orders for districts 1 to 10
} DELIVERY_DATA, *PDELIVERY_DATA;

//This structure is used for posting delivery transactions and for writing
them to the delivery server.
typedef struct _DELIVERY_TRANSACTION
{
        SYSTEMTIME      queue;
//time delivery transaction queued
        long                    w_id;
//delivery warehouse
        short                   o_carrier_id;           //carrier id
} DELIVERY_TRANSACTION;

typedef struct
{       // input params
        long                                    w_id;
        short                                   d_id;
        short                                   threshold;

        // output params
        EXEC_STATUS
exec_status_code;
        long                                    low_stock;
} STOCK_LEVEL_DATA, *PSTOCK_LEVEL_DATA;
```

txn_base.h

```
/*      FILE:           TXN_BASE.H
 *                                      Microsoft TPC-C Kit Ver.
4.20.000
 *                                      Copyright Microsoft,
1999
 *      All Rights Reserved
 *
 *                                      Version 4.10.000 audited
by Richard Gimarc, Performance Metrics, 3/17/99
 *
 *      PURPOSE:        Header file for TPC-C txn class
implementation.
 *
 *  Change history:
 *              4.20.000 - updated rev number to match kit
 */

#pragma once

// need to declare functions for import, unless define has already been
created
// by the DLL's .cpp module for export.
#ifndef DllDecl
#define DllDecl  __declspec( dllimport )
#endif

class DllDecl CTPCC_BASE
{
        public:
                CTPCC_BASE(void) {};
                virtual ~CTPCC_BASE(void) {};

                virtual PNEW_ORDER_DATA
BuffAddr_NewOrder()             = 0;
                virtual PPAYMENT_DATA
BuffAddr_Payment()      = 0;
                virtual PDELIVERY_DATA
BuffAddr_Delivery()     = 0;
                virtual PSTOCK_LEVEL_DATA
BuffAddr_StockLevel()   = 0;
                virtual PORDER_STATUS_DATA
BuffAddr_OrderStatus()  = 0;
//              virtual void NewOrder                   () =
0;
                virtual void NewOrder
(BOOL fLocal) = 0;
//              virtual void Payment            () = 0;
                virtual void Payment            (BOOL fLocal)
= 0;
                virtual void Delivery           () = 0;
                virtual void StockLevel                 () =
0;
                virtual void OrderStatus        () = 0;
};
```

txnlog.h

```
/*      FILE:           TXNLOG.H
 *                              Microsoft TPC-C Kit Ver.
4.10.000
 *                              not yet audited
 *
 *      PURPOSE:        Header file for txn log class
 *                              Copyright Microsoft,
1999
 *      All Rights Reserved
 *
 */

#pragma once

  typedef struct _TXN_NEWORDER
        {
    BYTE        OL_Count;       //range 0 to 31
    BYTE        OL_Remote_Count;    //range 0 to 31
    WORD        c_id;
    int         o_id;
        } TXN_NEWORDER;

  typedef struct _TXN_PAYMENT
        {
    BYTE        CustByName;
    BYTE        IsRemote;
        } TXN_PAYMENT;
```

```
typedef struct _TXN_ORDERSTATUS
        {
                BYTE      CustByName;
        } TXN_ORDERSTATUS;

        typedef union _TXN_DETAILS
        {
                TXN_NEWORDER   NewOrder;
                TXN_PAYMENT                Payment;
                TXN_ORDERSTATUS            OrderStatus;
        } TXN_DETAILS;


        // Common header for all records in txn log.  The TxnType
field is
        // a switch which identifies the particular variant.
        #define TXN_REC_TYPE_CONTROL                1
//
        #define TXN_REC_TYPE_TPCC
2       // replaces TRANSACTION_TYPE_TPCC
        #define TXN_REC_TYPE_TPCC_DELIV_DEF         3

        typedef struct _TXN_RECORD_HEADER
        {
                JULIAN_TIME        TxnStartT0;
// start of txn
                BYTE      TxnType;                  //
one of TXN_REC_TYPE_*
                BYTE      TxnSubType;
// depends on TxnType
        } TXN_RECORD_HEADER,
*PTXN_RECORD_HEADER;


        typedef struct _TXN_RECORD_CONTROL
        {
                // common header; must exactly match
TXN_RECORD_HEADER
                JULIAN_TIME        TxnStartT0;
// start of txn
                BYTE      TxnType;                  // =
TXN_REC_TYPE_CONTROL
                BYTE      TxnSubType;
// depends on TxnType
                // end of common header

                DWORD   Len;
// number of bytes after this field
        } TXN_RECORD_CONTROL,
*PTXN_RECORD_CONTROL;


        // TPC-C Txn Record Layout:
        //
  //'TxnStartT0' is a Julian timestamp corresponding to the moment
the
  //txn is sent to the SUT, i.e., beginning of response time.  Deltas
  //are in milliseconds.  Note that if RTDelay > 0, then the txn was
  //delayed by this amount.  The delay occurs at the beginning of the
  //response time.  So if RTDelay > 0, then the txn was actually sent
  //at TxnStartT0 + RTDelay.
  //
  //Graphically:
  //
  //  time -->
  //
  //    |--- Menu  ---|-- Keying  --|-- Response --|--- Think  --|
  //     <- DeltaT1 -> <- DeltaT2 -> <- DeltaT4  -> <- DeltaT3 ->
  //                   ^
  //                   ^ TxnStartT0
  //
  //RTDelay is the amount of response time delay included in DeltaT4.
  //RTDelay is recorded per txn because this value can be changed on
  //the fly, and so may vary from txn to txn.
  //
  //TxnStatus is the txn completion code.  It is used to indicate errors.
  //For example, in the New Order txn, 1% of txns abort.  TxnStatus
will
  //reflect this.

        typedef struct _TXN_RECORD_TPCC
        {
                // common header; must exactly match
TXN_RECORD_HEADER
                JULIAN_TIME        TxnStartT0;
// start of txn
                BYTE      TxnType;                  // =
TXN_REC_TYPE_TPCC
                BYTE      TxnSubType;
// depends on TxnType
                // end of common header

                int     DeltaT1;                  // menu time
(ms)
                int     DeltaT2;                  // keying time
(ms)
                int     DeltaT3;                  // think time
(ms)
                int     DeltaT4;                  // response
time (ms)
                int     RTDelay;                  // response
time delay (ms)
                int                TxnError;          //
error code providing more detail for TxnStatus
                int                w_id;
// warehouse ID
                BYTE      d_id;                     //
assigned district ID for this thread
                BYTE      d_id_ThisTxn;             // district ID
chosen for this particular
                BYTE      TxnStatus;                // completion
status for txn to indicate errors
                BYTE      reserved;                 // for word
alignment
                TXN_DETAILS        TxnDetails;       //
        } TXN_RECORD_TPCC, *PTXN_RECORD_TPCC;

        // TPC-C Deferred Delivery Txn Record Layout:
        //
  //Incorporating delivery transaction information into the above
        //structure would increase the size of TXN_DETAILS from
8 to 42 bytes.
  //Hence, we store delivery transaction details in a separate structure.
  //
        typedef struct _TXN_RECORD_TPCC_DELIV_DEF
        {
                // common header; must exactly match
TXN_RECORD_HEADER
                JULIAN_TIME        TxnStartT0;
// start of txn
                BYTE      TxnType;                  // =
TXN_REC_TYPE_TPCC_DELIV_DEF
                BYTE      TxnSubType;
// = 0
                // end of common header
```

```
                int     DeltaT4;                // response
time (ms)
                int             DeltaTxnExec;   //
execution time (ms)
                int             w_id;
// warehouse ID
                BYTE    TxnStatus;              // completion
status for txn to indicate errors
                BYTE    reserved;               // for word
alignment
                short   o_carrier_id;   // carrier id
                long    o_id[10];               // returned
delivery transaction ids
        } TXN_RECORD_TPCC_DELIV_DEF,
*PTXN_RECORD_TPCC_DELIV_DEF;



#define         TXN_LOG_VERSION                 2
#define         TXN_DATA_START          4096    //
offset in log file where log records start
#define         TXN_LOG_EYE_CATCHER     "BC"    //
signature bytes at the start of log file


        ////////////////////////////////////////////////////////////////////////
        // The transaction log has a header as the first 4K block.
        //
        typedef struct _TXN_LOG_HEADER
        {
                char                            EyeCatcher[2];
// signature bytes; should always be "BC"
                int
LogVersion;             // set to TXN_LOG_VERSION
                JULIAN_TIME             BeginTxnTS;
        // timestamp of first (lowest) txn start
                JULIAN_TIME             EndTxnTS;
        // timestamp of last (highest) txn completion time
                int
iRecCount;              // number of records in log file
                BOOL                            bLogSorted;
                int
iFileSize;      // file size in bytes

                // the record map provides a fast way to get close
to a particular timestamp in a sorted log file.
//              struct
//              {
//                      JULIAN_TIME             TS;
                // timestamp of record
//                      int
iPos;           // byte position in file
//              }
RecMap[RecMapSize];
//#define       RecMapSize                      200

        } TXN_LOG_HEADER, *PTXN_LOG_HEADER;



#define READ_BUFFER_SIZE                64*1024
#define WRITE_BUFFER_SIZE                8*1024

#define NUM_READ_BUFFERS                1
#define NUM_WRITE_BUFFERS               2
#define MAX_NUM_BUFFERS                         2
// flags passed in to the constructor
#define TXN_LOG_WRITE           0x01
#define TXN_LOG_READ            0x02
#define TXN_LOG_SORTED          0x04
#define TXN_LOG_CRASHOPEN       0x08            // if
set, invalid headers will be tolerated; used for recovery

#define TXN_LOG_OS_ERROR        1
#define TXN_LOG_NOT_SORTED      2

#define SKIP_CTRL_RECS          1

class CTxnLog
{
        private:
                DWORD           iBufferSize;
        //buffer allocated size
                DWORD           iBytesFreeInBuffer;
//total bytes available for use in buffer
                int                             iNumBuffers;
                //buffers in use
                int                             iActiveBuffer;
                //indicates which buffer is active: 0 or 1
                int                             iIoBuffer;
                //buffer for any pending IO operation
//              int                             iFilePointer;
                //position in file.
                LARGE_INTEGER   lFilePointer;
//position in file.
                int                             iNextRec;
                //when reading, ordinal value of next record

                // A "save point" is remembered each time
GetNextRecord is called with a start time specified.
                // The next time it is called, if start time is after
the save point, we start scanning from the
                // save point.  This is particularly useful in
FindBestInterval, where the log is scanned repeatedly.
                JULIAN_TIME             SavePtTime;
//              int
iSavePtFilePointer;
                LARGE_INTEGER   lSavePtFilePointer;
                int
iSavePtNextRec;

                JULIAN_TIME     lastTS;
                //when writing sorted output, used to verify
records are sorted
                BOOL            bWrite;
                //writing log file
                BOOL            bCrashOpen;
                // tolerate bad headers and consistency checks

                BOOL                            bLogSorted;
                // is log file sorted?  applies to both input and
output
                JULIAN_TIME             BeginTxnTS;
                // timestamp of first (lowest) txn start
                JULIAN_TIME             EndTxnTS;
                // timestamp of last (highest) txn completion
time
                int
iRecCount;                              // number of records in log
file

                BYTE            *pCurrent;
        //ptr to current buffer
```

```
                BYTE
*pBuffer[MAX_NUM_BUFFERS];

                PTXN_RECORD_HEADER      *TxnArray;
        //transaction record pointer array for sort

                DWORD           dwError;
                HANDLE          hTxnFile;
        //handle to log file
                HANDLE          hMapFile;
        //map file used when sorting the log
                HANDLE          hIoComplete;
        //event to signify that there are no pending IOs
                HANDLE          hLogFileIo;
                //event to signal the IO thread to write the
inactive buffer

                Spinlock    Spin;
        //spin lock to protect the txn log file buffers

                int Write(BYTE *ptr, DWORD Size);
                static void LogFileIO(CTxnLog*);

        public:
                CTxnLog::CTxnLog(LPCTSTR szFileName,
DWORD dwOpts);
                ~CTxnLog(void);

                int WriteToLog(PTXN_RECORD_TPCC
pTxnRcrd);
                int
WriteToLog(PTXN_RECORD_TPCC_DELIV_DEF pTxnRcrd);
                int WriteToLog(PTXN_RECORD_CONTROL
pCtrlRec);
                int WriteToLog(PTXN_RECORD_HEADER
pCtrlRec);

                int WriteCtrlRecToLog(BYTE SubType,
LPTSTR lpStr, DWORD dwLen);

                void CloseTransactionLogFile(void);

                PTXN_RECORD_HEADER
GetNextRecord(BOOL bSkipCtrlRecs = FALSE);
                PTXN_RECORD_HEADER
GetNextRecord(JULIAN_TIME SeekTimeT0, BOOL bSkipCtrlRecs =
FALSE);

                int Sort(void);
                PTXN_RECORD_HEADER
GetSortedRecord(int index);

                inline BOOL IsSorted(void) { return
bLogSorted; };
                inline JULIAN_TIME BeginTS(void) { return
BeginTxnTS; };
                inline JULIAN_TIME EndTS(void) { return
EndTxnTS; };
                inline int RecordCount(void) { return
iRecCount; };
};

class CTXNLOG_ERR : public CBaseErr
{
        public:
                enum CTXNLOG_ERRS
                {
                        ERR_BAD_FILE_FORMAT,
// "File format is invalid."
                        ERR_UNKNOWN_LOG_VERSION,
// "Log file version is unknown."
                        ERR_BROKEN_LOG_FILE,
// "Log file is broken."
                        ERR_LOG_NOT_SORTED,
                // "Log file is not sorted"
                        ERR_INVALID_TIME_SEQ,
// "Internal Error: Record Time Sequence invalid."
                };

                CTXNLOG_ERR(int iErr) : CBaseErr(iErr) {};

                int ErrorType() {return
ERR_TYPE_TXNLOG;};

                char *ErrorText()
                {
                        static char *szMsgs[] = {
                                "File format is invalid.",
                                "Log file version is
unknown.",
                                "Log file is broken.",
                                "Log file is not sorted",
                                "Internal Error: Record
Time Sequence invalid.",
                                ""
                        };

                        for(int i = 0; szMsgs[i][0]; i++)
                        {
                                if ( m_idMsg == i )
                                        break;
                        }

                        return(szMsgs[i][0] ? szMsgs[i] :
ERR_UNKNOWN);
                };
};
```

Stored Procedures

delivery.sql

```
-- File:    DELIVERY.SQL
--          Microsoft TPC-C Benchmark Kit Ver. 4.10
--          Copyright Microsoft, 1999
-- Purpose:  Creates delivery transaction stored procedure


set ANSI_DEFAULTS on
set IMPLICIT_TRANSACTIONS off
go

use tpcc
go

if exists (select name from sysobjects where name = 'tpcc_delivery' )
            drop procedure tpcc_delivery
go

create proc tpcc_delivery           @w_id          int,

                                                   @o_carrier_id   smallint
```

```
as

declare @d_id          tinyint,
        @o_id          int,
        @c_id          int,
        @total         numeric(12,2),
        @oid1          int,
        @oid2          int,
        @oid3          int,
        @oid4          int,
        @oid5          int,
        @oid6          int,
        @oid7          int,
        @oid8          int,
        @oid9          int,
        @oid10         int,
            @time      datetime

begin tran d

            select     @d_id = 0,
                       @time = getdate()

            while (@d_id < 10)
            begin

                select @d_id  = @d_id + 1,
                               @total = 0,
                               @o_id  = 0

                       select      top 1
                                   @o_id      = no_o_id
                       from        new_order (serializable updlock)
                       where       no_w_id    = @w_id and
                                   no_d_id    = @d_id
                       order       by no_o_id asc

                if (@@rowcount <> 0)
                       begin

-- claim the order for this district

                                   delete      new_order
                                   where       no_w_id    = @w_id and
                                               no_d_id    = @d_id and
                                               no_o_id    = @o_id

-- set carrier_id on this order (and get customer id)

                                   update      orders
                                   set         o_carrier_id           =
@o_carrier_id,
                                               @c_id                  =
o_c_id
                                   where       o_w_id                 =
@w_id and
                                               o_d_id                 =
@d_id and
                                               o_id                   =
@o_id

-- set date in all lineitems for this order (and sum amounts)

                                   update      order_line
                                   set         ol_delivery_d          =
@time,
                                               @total                 =
@total + ol_amount
                                   where       ol_w_id                =
@w_id and
                                               ol_d_id                =
@d_id and
                                               ol_o_id                =
@o_id

-- accummulate lineitem amounts for this order into customer

                                   update      customer
                                   set         c_balance  = c_balance +
@total,
                                               c_delivery_cnt         =
c_delivery_cnt + 1
                                   where       c_w_id                 =
@w_id and
                                               c_d_id                 =
@d_id and
                                               c_id                   =
@c_id

                           end

                     select @oid1 = case @d_id when  1  then @o_id else
@oid1 end,
                            @oid2 = case @d_id when  2  then @o_id else @oid2 end,
                            @oid3 = case @d_id when  3  then @o_id else @oid3 end,
                            @oid4 = case @d_id when  4  then @o_id else @oid4 end,
                            @oid5 = case @d_id when  5  then @o_id else @oid5 end,
                            @oid6 = case @d_id when  6  then @o_id else @oid6 end,
                            @oid7 = case @d_id when  7  then @o_id else @oid7 end,
                            @oid8 = case @d_id when  8  then @o_id else @oid8 end,
                            @oid9 = case @d_id when  9  then @o_id else @oid9 end,
                            @oid10 = case @d_id when 10 then @o_id else @oid10 end

   end

commit tran d

-- return delivery data to client

select @oid1,
       @oid2,
       @oid3,
       @oid4,
       @oid5,
       @oid6,
       @oid7,
       @oid8,
       @oid9,
       @oid10

go
```

neword.sql

```
-- File:    NEWORD.SQL
--          Microsoft TPC-C Benchmark Kit Ver. 4.30.000
--          Copyright Microsoft, 1999
-- Purpose:  Creates new order transaction stored procedure
--
--            Interface Level: 4.10.000

set ANSI_DEFAULTS on
set IMPLICIT_TRANSACTIONS off
go
```

```
use tpcc
go

if exists ( select name from sysobjects where name = 'tpcc_neworder' )
        drop procedure tpcc_neworder
go

create proc tpcc_neworder
                                                @w_id
int,
                                                @d_id
tinyint,
                                                @c_id
int,
                                                @o_ol_cnt
tinyint,
                                                @o_all_local
tinyint,
                                                @i_id1  int =
0, @s_w_id1  int = 0, @ol_qty1  smallint = 0,
                                                @i_id2  int =
0, @s_w_id2  int = 0, @ol_qty2  smallint = 0,
                                                @i_id3  int =
0, @s_w_id3  int = 0, @ol_qty3  smallint = 0,
                                                @i_id4  int =
0, @s_w_id4  int = 0, @ol_qty4  smallint = 0,
                                                @i_id5  int =
0, @s_w_id5  int = 0, @ol_qty5  smallint = 0,
                                                @i_id6  int =
0, @s_w_id6  int = 0, @ol_qty6  smallint = 0,
                                                @i_id7  int =
0, @s_w_id7  int = 0, @ol_qty7  smallint = 0,
                                                @i_id8  int =
0, @s_w_id8  int = 0, @ol_qty8  smallint = 0,
                                                @i_id9  int =
0, @s_w_id9  int = 0, @ol_qty9  smallint = 0,
                                                @i_id10 int =
0, @s_w_id10 int = 0, @ol_qty10 smallint = 0,
                                                @i_id11 int =
0, @s_w_id11 int = 0, @ol_qty11 smallint = 0,
                                                @i_id12 int =
0, @s_w_id12 int = 0, @ol_qty12 smallint = 0,
                                                @i_id13 int =
0, @s_w_id13 int = 0, @ol_qty13 smallint = 0,
                                                @i_id14 int =
0, @s_w_id14 int = 0, @ol_qty14 smallint = 0,
                                                @i_id15 int =
0, @s_w_id15 int = 0, @ol_qty15 smallint = 0


as
declare     @w_tax          numeric(4,4),
        @d_tax          numeric(4,4),
        @c_last         char(16),
        @c_credit       char(2),
        @c_discount     numeric(4,4),
        @i_price        numeric(5,2),
        @i_name         char(24),
        @i_data         char(50),
        @o_entry_d      datetime,
        @remote_flag    int,
        @s_quantity     smallint,
        @s_data         char(50),
        @s_dist         char(24),
                @li_no          int,
                @o_id                   int,
                @commit_flag    tinyint,
        @li_id          int,
        @li_s_w_id      int,
        @li_qty         smallint,
                @ol_number              int,
                @c_id_local             int

begin

begin transaction n

--  get district tax and next availible order id and update
--  plus initialize local variables

                update      district
                set         @d_tax      = d_tax,
                            @o_id       = d_next_o_id,
                            d_next_o_id  = d_next_o_id + 1,
                            @li_no      = 0,
                            @commit_flag = 1
                where       d_w_id      = @w_id and
                            d_id        = @d_id

--  process orderlines

                while (@li_no < @o_ol_cnt)
                begin

                            select @li_no = @li_no + 1

--  set i_id, s_w_id, and qty for this lineitem

                            select      @li_id = case @li_no
                                                when 1 then @i_id1
                                                when 2 then @i_id2
                                                when 3 then @i_id3
                                                when 4 then @i_id4
                                                when 5 then @i_id5
                                                when 6 then @i_id6
                                                when 7 then @i_id7
                                                when 8 then @i_id8
                                                when 9 then @i_id9
                                                when 10 then @i_id10
                                                when 11 then @i_id11
                                                when 12 then @i_id12
                                                when 13 then @i_id13
                                                when 14 then @i_id14
                                                when 15 then @i_id15
                                                end,

                                        @li_s_w_id = case @li_no
                                                when 1 then @s_w_id1

                                                when 2 then @s_w_id2

                                                when 3 then @s_w_id3

                                                when 4 then @s_w_id4

                                                when 5 then @s_w_id5

                                                when 6 then @s_w_id6

                                                when 7 then @s_w_id7

                                                when 8 then @s_w_id8

                                                when 9 then @s_w_id9
```

```
                                        when 10 then
@s_w_id10
                                        when 11 then
@s_w_id11
                                        when 12 then
@s_w_id12
                                        when 13 then
@s_w_id13
                                        when 14 then
@s_w_id14
                                        when 15 then
@s_w_id15
                                        end,

                        @li_qty = case  @li_no
                                        when 1 then @ol_qty1
                                        when 2 then @ol_qty2
                                        when 3 then @ol_qty3
                                        when 4 then @ol_qty4
                                        when 5 then @ol_qty5
                                        when 6 then @ol_qty6
                                        when 7 then @ol_qty7
                                        when 8 then @ol_qty8
                                        when 9 then @ol_qty9
                                        when 10 then @ol_qty10
                                        when 11 then @ol_qty11
                                        when 12 then @ol_qty12
                                        when 13 then @ol_qty13
                                        when 14 then @ol_qty14
                                        when 15 then @ol_qty15
                                        end

-- get item data (no one updates item)

                select  @i_price = i_price,
                        @i_name  = i_name,
                        @i_data  = i_data
                from    item (tablock repeatableread)
                where   i_id = @li_id

-- update stock values

                update  stock
                set     s_ytd           = s_ytd +
@li_qty,
                        @s_quantity     = s_quantity
= s_quantity - @li_qty +

case when (s_quantity - @li_qty < 10) then 91 else 0 end,
                        s_order_cnt     = s_order_cnt
+ 1,
                        s_remote_cnt    = s_remote_cnt
+ case when (@li_s_w_id = @w_id) then 0 else 1 end,

                        @s_data         = s_data,
                        @s_dist         = case @d_id
                                          when 1  then
s_dist_01
                                          when 2  then
s_dist_02
                                          when 3  then
s_dist_03
                                          when 4  then
s_dist_04
                                          when 5  then
s_dist_05
                                          when 6  then
s_dist_06
                                          when 7  then
s_dist_07
                                          when 8  then
s_dist_08
                                          when 9  then
s_dist_09
                                          when 10 then
s_dist_10
                                          end
                where   s_i_id          = @li_id and
                        s_w_id          = @li_s_w_id

-- if there actually is a stock (and item) with these ids, go to work

                if (@@rowcount > 0)
                begin

-- insert order_line data (using data from item and stock)

                        insert into order_line values(@o_id,


@d_id,

@w_id,

@li_no,

@li_id,

@li_s_w_id,

'dec 31, 1899',

@li_qty,

@i_price * @li_qty,

@s_dist)

-- send line-item data to client

                        select  @i_name,
                                @s_quantity,
                                case when (
(patindex('%ORIGINAL%',@i_data) > 0) and

(patindex('%ORIGINAL%',@s_data) > 0) )
                                   then 'B' else 'G' end,
                                @i_price,
                                @i_price * @li_qty

                end
                else
                begin

-- no item (or stock) found - triggers rollback condition

                        select ",0,",0,0
                        select @commit_flag = 0

                end
        end

-- get customer last name, discount, and credit rating

        select  @c_last = c_last,
```

```
                @c_discount = c_discount,
                @c_credit   = c_credit,
                @c_id_local = c_id,
                @o_entry_d  = getdate()
        from    customer (repeatableread)
        where   c_id                = @c_id and
                c_w_id              = @w_id and
                c_d_id              = @d_id

-- insert fresh row into orders table

        insert into orders values (     @o_id,
                                        @d_id,
                                        @w_id,
                                        @c_id_local,
                                        @o_entry_d,
                                        0,
                                        @o_ol_cnt,
                                        @o_all_local)

-- insert corresponding row into new-order table

        insert into new_order values (  @o_id,
                                        @d_id,
                                        @w_id)

-- select warehouse tax

        select  @w_tax  = w_tax
        from    warehouse (repeatableread)
        where   w_id    = @w_id

        if (@commit_flag = 1)

                commit transaction n
        else

-- all that work for nuthin!!!

                rollback transaction n

-- return order data to client

        select  @w_tax,
                @d_tax,
                @o_id,
                @c_last,
                @c_discount,
                @c_credit,
                @o_entry_d,
                @commit_flag

end

go
```

ordstat.sql

```
-- File:    ORDSTAT.SQL
--          Microsoft TPC-C Benchmark Kit Ver. 4.10
--          Copyright Microsoft, 1999
-- Purpose: Creates order status transaction stored procedure

set ANSI_DEFAULTS on
set IMPLICIT_TRANSACTIONS off
go

use tpcc
go

if exists ( select name from sysobjects where name = 'tpcc_orderstatus'
)
        drop procedure  tpcc_orderstatus
go

create proc tpcc_orderstatus    @w_id   int,
                                @d_id   tinyint,

                                @c_id   int,
                                @c_last char(16) = ''


as

declare @c_balance      numeric(12,2),
    @c_first            char(16),
    @c_middle           char(2),
    @o_id               int,
    @o_entry_d          datetime,
    @o_carrier_id       smallint,
    @cnt                smallint

begin tran o

if (@c_id = 0)
        begin

-- get customer id and info using last name

                select  @cnt    = (count(*)+1)/2
                from    customer (repeatableread)
                where   c_last  = @c_last and
                        c_w_id  = @w_id and
                        c_d_id  = @d_id

                set     rowcount @cnt

                select  @c_id               = c_id,
                        @c_balance          = c_balance,
                          @c_first = c_first,
                          @c_last  = c_last,
                          @c_middle         = c_middle
                from    customer (repeatableread)
                where   c_last              = @c_last and
                        c_w_id              = @w_id and
                        c_d_id              = @d_id
                order   by c_w_id, c_d_id, c_last, c_first

                set     rowcount 0
        end

        else

        begin

-- get customer info if by id

                select  @c_balance          = c_balance,
                        @c_first    = c_first,
                        @c_middle           = c_middle,
                        @c_last             = c_last
                from    customer (repeatableread)
                where   c_id                = @c_id and
                        c_d_id              = @d_id and
                        c_w_id              = @w_id
```

```
                        select      @cnt        = @@rowcount

                end

-- if no such customer

                if (@cnt = 0)
                begin
                        raiserror('Customer not found',18,1)
                        goto custnotfound
                end

-- get order info

                select      @o_id               = o_id,
                            @o_entry_d          = o_entry_d,
                            @o_carrier_id       = o_carrier_id

                from        orders (serializable)
                where       o_c_id              = @c_id and
                            o_d_id              = @d_id and
                            o_w_id              = @w_id
                order       by o_id asc

-- select order lines for the current order

                select      ol_supply_w_id,
                            ol_i_id,
                            ol_quantity,
                            ol_amount,
                            ol_delivery_d
                from        order_line (repeatableread)
                where       ol_o_id = @o_id and
                            ol_d_id = @d_id and
                            ol_w_id = @w_id

custnotfound:

commit tran o

-- return data to client

select      @c_id,
            @c_last,
            @c_first,
            @c_middle,
            @o_entry_d,
            @o_carrier_id,
            @c_balance,
            @o_id

go
```

payment.sql

```
-- File:    PAYMENT.SQL
--          Microsoft TPC-C Benchmark Kit Ver. 4.10
--          Copyright Microsoft, 1999
-- Purpose:  Creates payment transaction stored procedure

set ANSI_DEFAULTS on
set IMPLICIT_TRANSACTIONS off
go

use tpcc
go

if exists (select name from sysobjects where name = 'tpcc_payment' )
            drop procedure tpcc_payment
go

create proc tpcc_payment            @w_id           int,
                                                    @c_w_id         int,
                                                    @h_amount
numeric(6,2),
                                                    @d_id           tinyint,
                                                    @c_d_id         tinyint,
                                                    @c_id           int,
                                                    @c_last         char(16) = ''


as
declare  @w_street_1     char(20),
        @w_street_2      char(20),
        @w_city          char(20),
        @w_state         char(2),
        @w_zip           char(9),
        @w_name          char(10),
        @d_street_1      char(20),
        @d_street_2      char(20),
        @d_city          char(20),
        @d_state         char(2),
        @d_zip           char(9),
        @d_name          char(10),
        @c_first         char(16),
        @c_middle        char(2),
        @c_street_1      char(20),
        @c_street_2      char(20),
        @c_city          char(20),
        @c_state         char(2),
        @c_zip           char(9),
        @c_phone         char(16),
        @c_since         datetime,
        @c_credit        char(2),
        @c_credit_lim    numeric(12,2),
        @c_balance       numeric(12,2),
        @c_discount      numeric(4,4),
        @data            char(500),
        @c_data          char(500),
        @datetime        datetime,
        @w_ytd           numeric(12,2),
        @d_ytd           numeric(12,2),
        @cnt             smallint,
        @val             smallint,
        @screen_data     char(200),
                @d_id_local             tinyint,
                @w_id_local             int,
                @c_id_local             int

select @screen_data = ''

begin tran p

-- get payment date

                select      @datetime = getdate()

                if (@c_id = 0)
                begin

-- get customer id and info using last name
```

```
                select top 1 @c_id = c_id
                from (
                        select top 50 percent c_id, c_first
                        from    customer (repeatableread)
                        where   c_last      = @c_last and
                                c_w_id      = @c_w_id
and
                                c_d_id      = @c_d_id
                        order by c_first
                ) top_fifty
                order by c_first desc
        end

-- get customer info and update balances

        update  customer
        set     @c_balance          = c_balance = c_balance -
@h_amount,
                c_payment_cnt       = c_payment_cnt + 1,
                c_ytd_payment       = c_ytd_payment +
@h_amount,
                @c_first    = c_first,
                @c_middle           = c_middle,
                @c_last             = c_last,
                @c_street_1         = c_street_1,
                @c_street_2         = c_street_2,
                @c_city             = c_city,
                @c_state    = c_state,
                @c_zip              = c_zip,
                @c_phone    = c_phone,
                @c_credit   = c_credit,
                @c_credit_lim       = c_credit_lim,
                @c_discount         = c_discount,
                @c_since    = c_since,
                @data               = c_data,
                @c_id_local         = c_id
        where   c_id                = @c_id and
                c_w_id              = @c_w_id and
                c_d_id              = @c_d_id


-- if customer has bad credit get some more info

        if (@c_credit = 'BC')
        begin

--      compute new info

                select @c_data      = convert(char(5),@c_id)
+

convert(char(4),@c_d_id) +

convert(char(5),@c_w_id) +
                                        convert(char(4),@d_id)
+
                                        convert(char(5),@w_id)
+

convert(char(19),@h_amount) +
                                        substring(@data, 1, 458)


-- update customer info

                update  customer
                set     c_data      = @c_data
                where   c_id        = @c_id and
                        c_w_id      = @c_w_id and
                        c_d_id      = @c_d_id

                select  @screen_data = substring
(@c_data,1,200)
        end

-- get district data and update year-to-date

        update  district
        set     d_ytd               = d_ytd + @h_amount,
                @d_street_1         = d_street_1,
                @d_street_2         = d_street_2,
                @d_city             = d_city,
                @d_state    = d_state,
                @d_zip              = d_zip,
                @d_name             = d_name,
                @d_id_local         = d_id
        where   d_w_id              = @w_id and
                d_id                = @d_id

-- get warehouse data and update year-to-date

        update  warehouse
        set     w_ytd               = w_ytd + @h_amount,
                @w_street_1         = w_street_1,
                @w_street_2         = w_street_2,
                @w_city             = w_city,
                @w_state    = w_state,
                @w_zip              = w_zip,
                @w_name             = w_name,
                @w_id_local         = w_id
        where   w_id                = @w_id

-- create history record

        insert into history values (    @c_id_local,
                                        @c_d_id,
                                        @c_w_id,

                                        @d_id_local,
                                        @w_id_local,
                                        @datetime,
                                        @h_amount,
                                        @w_name + '
 ' + @d_name)
commit tran p

-- return data to client

select  @c_id,
        @c_last,
        @datetime,
        @w_street_1,
        @w_street_2,
        @w_city,
        @w_state,
        @w_zip,
        @d_street_1,
        @d_street_2,
        @d_city,
        @d_state,
        @d_zip,
        @c_first,
        @c_middle,
        @c_street_1,
        @c_street_2,
```

```
        @c_city,
        @c_state,
        @c_zip,
        @c_phone,
        @c_since,
        @c_credit,
        @c_credit_lim,
        @c_discount,
        @c_balance,
        @screen_data

go
```

stocklev.sql

```
-- File:    STOCKLEV.SQL
--          Microsoft TPC-C Benchmark Kit Ver. 4.10
--          Copyright Microsoft, 1999
-- Purpose:  Creates stock level transaction stored procedure


set ANSI_DEFAULTS on
set IMPLICIT_TRANSACTIONS off
go

use tpcc
go

if exists (select name from sysobjects where name = 'tpcc_stocklevel' )
        drop procedure tpcc_stocklevel
go

create proc tpcc_stocklevel     @w_id           int,
                                @d_id
tinyint,
                                @threshhold
smallint
as

declare     @o_id_low int,
            @o_id_high int

select      @o_id_low       = (d_next_o_id - 20),
            @o_id_high      = (d_next_o_id - 1)
from        district
where       d_w_id          = @w_id and
            d_id            = @d_id

select      count(distinct(s_i_id))
from        stock, order_line
where       ol_w_id         =  @w_id and
            ol_d_id         =  @d_id and
            ol_o_id           between @o_id_low and
                              @o_id_high and
            s_w_id          =  ol_w_id and
            s_i_id          =  ol_i_id and
            s_quantity <  @threshhold
option (order group)

go
```

Appendix B: Database Design

Database Build

4x2492

1	sgnode01	1	2492
2	sgnode02	2493	4984
3	sgnode03	4985	7476
4	sgnode04	7477	9968

add_constraints_t1.sql

```
--file 1_to_2492\add_constraints_t.sql

set ansi_warnings on
set ansi_nulls on
go

use tpcc
go

-- Drop any existing partitioning constraints
--

alter table t_warehouse drop constraint cnst_w_id
go

alter table t_district drop constraint cnst_d_w_id
go

alter table t_customer drop constraint cnst_c_w_id
go

alter table t_history drop constraint cnst_h_w_id
go

alter table t_stock drop constraint cnst_s_w_id
go

alter table t_orders drop constraint cnst_o_w_id
go

alter table t_order_line drop constraint cnst_ol_w_id
go

alter table t_new_order drop constraint cnst_no_w_id
go

-- Add partitioning constraints between 1 and 2492
--

alter table t_warehouse add constraint cnst_w_id check (w_id <=
convert(int,2492))
go

alter table t_district add constraint cnst_d_w_id check (d_w_id <=
convert(int,2492))
go

alter table t_customer add constraint cnst_c_w_id check (c_w_id <=
convert(int,2492))
go

alter table t_history add constraint cnst_h_w_id check (h_w_id <=
convert(int,2492))
go

alter table t_stock add constraint cnst_s_w_id check (s_w_id <=
convert(int,2492))
go

alter table t_orders add constraint cnst_o_w_id check (o_w_id <=
convert(int,2492))
go

alter table t_order_line add constraint cnst_ol_w_id check (ol_w_id <=
convert(int,2492))
go

alter table t_new_order add constraint cnst_no_w_id check (no_w_id
<= convert(int,2492))
go
```

add_constraints_t2.sql

```
--file 2493_to_4984\add_constraints_t.sql

set ansi_warnings on
set ansi_nulls on
go

use tpcc
go

-- Drop any existing partitioning constraints
--

alter table t_warehouse drop constraint cnst_w_id
go

alter table t_district drop constraint cnst_d_w_id
go

alter table t_customer drop constraint cnst_c_w_id
go

alter table t_history drop constraint cnst_h_w_id
go

alter table t_stock drop constraint cnst_s_w_id
go

alter table t_orders drop constraint cnst_o_w_id
go

alter table t_order_line drop constraint cnst_ol_w_id
go

alter table t_new_order drop constraint cnst_no_w_id
go

-- Add partitioning constraints between 2493 and 4984
--

alter table t_warehouse add constraint cnst_w_id check (w_id between
convert(int,2493) and convert(int,4984))
go
```

```
alter table t_district add constraint cnst_d_w_id check (d_w_id
between convert(int,2493) and convert(int,4984))
go

alter table t_customer add constraint cnst_c_w_id check (c_w_id
between convert(int,2493) and convert(int,4984))
go

alter table t_history add constraint cnst_h_w_id check (h_w_id
between convert(int,2493) and convert(int,4984))
go

alter table t_stock add constraint cnst_s_w_id check (s_w_id between
convert(int,2493) and convert(int,4984))
go

alter table t_orders add constraint cnst_o_w_id check (o_w_id between
convert(int,2493) and convert(int,4984))
go

alter table t_order_line add constraint cnst_ol_w_id check (ol_w_id
between convert(int,2493) and convert(int,4984))
go

alter table t_new_order add constraint cnst_no_w_id check (no_w_id
between convert(int,2493) and convert(int,4984))
go
```

add_constraints_t3.sql

```
--file 2493_to_4984\add_constraints_t.sql

set ansi_warnings on
set ansi_nulls on
go

use tpcc
go

-- Drop any existing partitioning constraints
--

alter table t_warehouse drop constraint cnst_w_id
go

alter table t_district drop constraint cnst_d_w_id
go

alter table t_customer drop constraint cnst_c_w_id
go

alter table t_history drop constraint cnst_h_w_id
go

alter table t_stock drop constraint cnst_s_w_id
go

alter table t_orders drop constraint cnst_o_w_id
go

alter table t_order_line drop constraint cnst_ol_w_id
go

alter table t_new_order drop constraint cnst_no_w_id
go

-- Add partitioning constraints between 2493 and 4984
--

alter table t_warehouse add constraint cnst_w_id check (w_id between
convert(int,2493) and convert(int,4984))
go

alter table t_district add constraint cnst_d_w_id check (d_w_id
between convert(int,2493) and convert(int,4984))
go

alter table t_customer add constraint cnst_c_w_id check (c_w_id
between convert(int,2493) and convert(int,4984))
go

alter table t_history add constraint cnst_h_w_id check (h_w_id
between convert(int,2493) and convert(int,4984))
go

alter table t_stock add constraint cnst_s_w_id check (s_w_id between
convert(int,2493) and convert(int,4984))
go

alter table t_orders add constraint cnst_o_w_id check (o_w_id between
convert(int,2493) and convert(int,4984))
go

alter table t_order_line add constraint cnst_ol_w_id check (ol_w_id
between convert(int,2493) and convert(int,4984))
go

alter table t_new_order add constraint cnst_no_w_id check (no_w_id
between convert(int,2493) and convert(int,4984))
go
```

add_constraints_t4.sql

```
--file 7477_to_9968\add_constraints_t.sql

set ansi_warnings on
set ansi_nulls on
go

use tpcc
go

-- Drop any existing partitioning constraints
--

alter table t_warehouse drop constraint cnst_w_id
go

alter table t_district drop constraint cnst_d_w_id
go

alter table t_customer drop constraint cnst_c_w_id
go

alter table t_history drop constraint cnst_h_w_id
go

alter table t_stock drop constraint cnst_s_w_id
go

alter table t_orders drop constraint cnst_o_w_id
go
```

```
alter table t_order_line drop constraint cnst_ol_w_id
go

alter table t_new_order drop constraint cnst_no_w_id
go

-- Add partitioning constraints between 7477 and 9968
--

alter table t_warehouse add constraint cnst_w_id check (w_id >=
convert(int,7477))
go

alter table t_district add constraint cnst_d_w_id check (d_w_id >=
convert(int,7477))
go

alter table t_customer add constraint cnst_c_w_id check (c_w_id >=
convert(int,7477))
go

alter table t_history add constraint cnst_h_w_id check (h_w_id >=
convert(int,7477))
go

alter table t_stock add constraint cnst_s_w_id check (s_w_id >=
convert(int,7477))
go

alter table t_orders add constraint cnst_o_w_id check (o_w_id >=
convert(int,7477))
go

alter table t_order_line add constraint cnst_ol_w_id check (ol_w_id >=
convert(int,7477))
go

alter table t_new_order add constraint cnst_no_w_id check (no_w_id
>= convert(int,7477))
go
```

add_views1.sql

```
-- file 1_to_2492\add_views.sql

set ansi_warnings on
set ansi_nulls on
go

use tpcc
go

-- drop any existing views
if object_id('warehouse') is not null drop view warehouse
if object_id('district') is not null drop view district
if object_id('customer') is not null drop view customer
if object_id('history') is not null drop view history
if object_id('stock') is not null drop view stock
if object_id('orders') is not null drop view orders
if object_id('order_line') is not null drop view order_line
if object_id('new_order') is not null drop view new_order
if object_id('item') is not null drop view item
go

--add views for partition 1
create view warehouse as
 select * from /*rmt1.tpcc.dbo.*/t_warehouse
  union all
 select * from rmt2.tpcc.dbo.t_warehouse
  union all
 select * from rmt3.tpcc.dbo.t_warehouse
  union all
 select * from rmt4.tpcc.dbo.t_warehouse
go

create view district as
 select * from /*rmt1.tpcc.dbo.*/t_district
  union all
 select * from rmt2.tpcc.dbo.t_district
  union all
 select * from rmt3.tpcc.dbo.t_district
  union all
 select * from rmt4.tpcc.dbo.t_district
go

create view customer as
 select * from /*rmt1.tpcc.dbo.*/t_customer
  union all
 select * from rmt2.tpcc.dbo.t_customer
  union all
 select * from rmt3.tpcc.dbo.t_customer
  union all
 select * from rmt4.tpcc.dbo.t_customer
go

create view history as
 select * from /*rmt1.tpcc.dbo.*/t_history
  union all
 select * from rmt2.tpcc.dbo.t_history
  union all
 select * from rmt3.tpcc.dbo.t_history
  union all
 select * from rmt4.tpcc.dbo.t_history
go

create view stock as
 select * from /*rmt1.tpcc.dbo.*/t_stock
  union all
 select * from rmt2.tpcc.dbo.t_stock
  union all
 select * from rmt3.tpcc.dbo.t_stock
  union all
 select * from rmt4.tpcc.dbo.t_stock
go

create view orders as
 select * from /*rmt1.tpcc.dbo.*/t_orders
  union all
 select * from rmt2.tpcc.dbo.t_orders
  union all
 select * from rmt3.tpcc.dbo.t_orders
  union all
 select * from rmt4.tpcc.dbo.t_orders
go

create view order_line as
 select * from /*rmt1.tpcc.dbo.*/t_order_line
  union all
 select * from rmt2.tpcc.dbo.t_order_line
  union all
 select * from rmt3.tpcc.dbo.t_order_line
  union all
 select * from rmt4.tpcc.dbo.t_order_line
go
```

```
create view new_order as
 select * from /*rmt1.tpcc.dbo.*/t_new_order
  union all
 select * from rmt2.tpcc.dbo.t_new_order
  union all
 select * from rmt3.tpcc.dbo.t_new_order
  union all
 select * from rmt4.tpcc.dbo.t_new_order
go

create view item as
 select * from t_item
go
```

add_views2.sql

```
-- file 2493_to_4984\add_views.sql

set ansi_warnings on
set ansi_nulls on
go

use tpcc
go

-- drop any existing views
if object_id('warehouse') is not null drop view warehouse
if object_id('district') is not null drop view district
if object_id('customer') is not null drop view customer
if object_id('history') is not null drop view history
if object_id('stock') is not null drop view stock
if object_id('orders') is not null drop view orders
if object_id('order_line') is not null drop view order_line
if object_id('new_order') is not null drop view new_order
if object_id('item') is not null drop view item
go

--add views for partition 2
create view warehouse as
 select * from /*rmt2.tpcc.dbo.*/t_warehouse
  union all
 select * from rmt1.tpcc.dbo.t_warehouse
  union all
 select * from rmt3.tpcc.dbo.t_warehouse
  union all
 select * from rmt4.tpcc.dbo.t_warehouse
go

create view district as
 select * from /*rmt2.tpcc.dbo.*/t_district
  union all
 select * from rmt1.tpcc.dbo.t_district
  union all
 select * from rmt3.tpcc.dbo.t_district
  union all
 select * from rmt4.tpcc.dbo.t_district
go

create view customer as
 select * from /*rmt2.tpcc.dbo.*/t_customer
  union all
 select * from rmt1.tpcc.dbo.t_customer
  union all
 select * from rmt3.tpcc.dbo.t_customer
  union all
 select * from rmt4.tpcc.dbo.t_customer
go

create view history as
 select * from /*rmt2.tpcc.dbo.*/t_history
  union all
 select * from rmt1.tpcc.dbo.t_history
  union all
 select * from rmt3.tpcc.dbo.t_history
  union all
 select * from rmt4.tpcc.dbo.t_history
go

create view stock as
 select * from /*rmt2.tpcc.dbo.*/t_stock
  union all
 select * from rmt1.tpcc.dbo.t_stock
  union all
 select * from rmt3.tpcc.dbo.t_stock
  union all
 select * from rmt4.tpcc.dbo.t_stock
go

create view orders as
 select * from /*rmt2.tpcc.dbo.*/t_orders
  union all
 select * from rmt1.tpcc.dbo.t_orders
  union all
 select * from rmt3.tpcc.dbo.t_orders
  union all
 select * from rmt4.tpcc.dbo.t_orders
go

create view order_line as
 select * from /*rmt2.tpcc.dbo.*/t_order_line
  union all
 select * from rmt1.tpcc.dbo.t_order_line
  union all
 select * from rmt3.tpcc.dbo.t_order_line
  union all
 select * from rmt4.tpcc.dbo.t_order_line
go

create view new_order as
 select * from /*rmt2.tpcc.dbo.*/t_new_order
  union all
 select * from rmt1.tpcc.dbo.t_new_order
  union all
 select * from rmt3.tpcc.dbo.t_new_order
  union all
 select * from rmt4.tpcc.dbo.t_new_order
go

create view item as
 select * from t_item
go
```

add_views3.sql

```
-- file 2493_to_4984\add_views.sql


set ansi_warnings on

set ansi_nulls on

go
```

```
use tpcc
go

-- drop any existing views
if object_id('warehouse') is not null drop view warehouse
if object_id('district') is not null drop view district
if object_id('customer') is not null drop view customer
if object_id('history') is not null drop view history
if object_id('stock') is not null drop view stock
if object_id('orders') is not null drop view orders
if object_id('order_line') is not null drop view order_line
if object_id('new_order') is not null drop view new_order
if object_id('item') is not null drop view item
go

--add views for partition 2
create view warehouse as
 select * from /*rmt2.tpcc.dbo.*/t_warehouse
  union all
 select * from rmt1.tpcc.dbo.t_warehouse
  union all
 select * from rmt3.tpcc.dbo.t_warehouse
  union all
 select * from rmt4.tpcc.dbo.t_warehouse
go

create view district as
 select * from /*rmt2.tpcc.dbo.*/t_district
  union all
 select * from rmt1.tpcc.dbo.t_district
  union all
 select * from rmt3.tpcc.dbo.t_district
  union all
 select * from rmt4.tpcc.dbo.t_district
go

create view customer as
 select * from /*rmt2.tpcc.dbo.*/t_customer
  union all
 select * from rmt1.tpcc.dbo.t_customer
  union all
 select * from rmt3.tpcc.dbo.t_customer
  union all
 select * from rmt4.tpcc.dbo.t_customer
go

create view history as
 select * from /*rmt2.tpcc.dbo.*/t_history
  union all
 select * from rmt1.tpcc.dbo.t_history
  union all
 select * from rmt3.tpcc.dbo.t_history
  union all
 select * from rmt4.tpcc.dbo.t_history
go

create view stock as
 select * from /*rmt2.tpcc.dbo.*/t_stock
  union all
 select * from rmt1.tpcc.dbo.t_stock
  union all
 select * from rmt3.tpcc.dbo.t_stock
  union all
 select * from rmt4.tpcc.dbo.t_stock
go

create view orders as
 select * from /*rmt2.tpcc.dbo.*/t_orders
  union all
 select * from rmt1.tpcc.dbo.t_orders
  union all
 select * from rmt3.tpcc.dbo.t_orders
  union all
 select * from rmt4.tpcc.dbo.t_orders
go

create view order_line as
 select * from /*rmt2.tpcc.dbo.*/t_order_line
  union all
 select * from rmt1.tpcc.dbo.t_order_line
  union all
 select * from rmt3.tpcc.dbo.t_order_line
  union all
 select * from rmt4.tpcc.dbo.t_order_line
go

create view new_order as
 select * from /*rmt2.tpcc.dbo.*/t_new_order
  union all
 select * from rmt1.tpcc.dbo.t_new_order
  union all
 select * from rmt3.tpcc.dbo.t_new_order
  union all
 select * from rmt4.tpcc.dbo.t_new_order
go

create view item as
 select * from t_item
```

```
go
```

add_views4.sql

```
-- file 7477_to_9968\add_views.sql

set ansi_warnings on
set ansi_nulls on
go

use tpcc
go

-- drop any existing views
if object_id('warehouse') is not null drop view warehouse
if object_id('district') is not null drop view district
if object_id('customer') is not null drop view customer
if object_id('history') is not null drop view history
if object_id('stock') is not null drop view stock
if object_id('orders') is not null drop view orders
if object_id('order_line') is not null drop view order_line
if object_id('new_order') is not null drop view new_order
if object_id('item') is not null drop view item
go

--add views for partition 4
create view warehouse as
 select * from /*rmt4.tpcc.dbo.*/t_warehouse
  union all
 select * from rmt1.tpcc.dbo.t_warehouse
  union all
 select * from rmt2.tpcc.dbo.t_warehouse
  union all
 select * from rmt3.tpcc.dbo.t_warehouse
go

create view district as
 select * from /*rmt4.tpcc.dbo.*/t_district
  union all
 select * from rmt1.tpcc.dbo.t_district
  union all
 select * from rmt2.tpcc.dbo.t_district
  union all
 select * from rmt3.tpcc.dbo.t_district
go

create view customer as
 select * from /*rmt4.tpcc.dbo.*/t_customer
  union all
 select * from rmt1.tpcc.dbo.t_customer
  union all
 select * from rmt2.tpcc.dbo.t_customer
  union all
 select * from rmt3.tpcc.dbo.t_customer
go

create view history as
 select * from /*rmt4.tpcc.dbo.*/t_history
  union all
 select * from rmt1.tpcc.dbo.t_history
  union all
 select * from rmt2.tpcc.dbo.t_history
  union all
 select * from rmt3.tpcc.dbo.t_history
go

create view stock as
 select * from /*rmt4.tpcc.dbo.*/t_stock
  union all
 select * from rmt1.tpcc.dbo.t_stock
  union all
 select * from rmt2.tpcc.dbo.t_stock
  union all
 select * from rmt3.tpcc.dbo.t_stock
go

create view orders as
 select * from /*rmt4.tpcc.dbo.*/t_orders
  union all
 select * from rmt1.tpcc.dbo.t_orders
  union all
 select * from rmt2.tpcc.dbo.t_orders
  union all
 select * from rmt3.tpcc.dbo.t_orders
go

create view order_line as
 select * from /*rmt4.tpcc.dbo.*/t_order_line
  union all
 select * from rmt1.tpcc.dbo.t_order_line
  union all
 select * from rmt2.tpcc.dbo.t_order_line
  union all
 select * from rmt3.tpcc.dbo.t_order_line
go

create view new_order as
 select * from /*rmt4.tpcc.dbo.*/t_new_order
  union all
 select * from rmt1.tpcc.dbo.t_new_order
  union all
 select * from rmt2.tpcc.dbo.t_new_order
  union all
 select * from rmt3.tpcc.dbo.t_new_order
go

create view item as
 select * from t_item
go
```

item_iot1.sql

```
-- file 1_to_2492\item_iot.sql

--add item instead-of-trigger for partition 1

set ANSI_DEFAULTS on
set IMPLICIT_TRANSACTIONS off
go

use tpcc
go

drop trigger iot_item
go

create trigger iot_item on item instead of update, insert, delete as
begin

--
-- local node (parition 1)
DELETE A FROM t_item A, DELETED D WHERE A.i_id = D.i_id
```

```
INSERT t_item SELECT * FROM INSERTED

--
-- remote node, partition 2
DELETE A FROM rmt2.tpcc.dbo.t_item A, DELETED D WHERE
A.i_id = D.i_id
INSERT rmt2.tpcc.dbo.t_item SELECT * FROM INSERTED

--
-- remote node, partition 3
DELETE A FROM rmt3.tpcc.dbo.t_item A, DELETED D WHERE
A.i_id = D.i_id
INSERT rmt3.tpcc.dbo.t_item SELECT * FROM INSERTED

--
-- remote node, partition 4
DELETE A FROM rmt4.tpcc.dbo.t_item A, DELETED D WHERE
A.i_id = D.i_id
INSERT rmt4.tpcc.dbo.t_item SELECT * FROM INSERTED

end
```

item_iot2.sql

```
-- file 2493_to_4984\item_iot.sql

--add item instead-of-trigger for partition 2

set ANSI_DEFAULTS on
set IMPLICIT_TRANSACTIONS off
go

use tpcc
go

drop trigger iot_item
go

create trigger iot_item on item instead of update, insert, delete as
begin

--
-- remote node, partition 1
DELETE A FROM rmt1.tpcc.dbo.t_item A, DELETED D WHERE
A.i_id = D.i_id
INSERT rmt1.tpcc.dbo.t_item SELECT * FROM INSERTED

--
-- local node (parition 2)
DELETE A FROM t_item A, DELETED D WHERE A.i_id = D.i_id
INSERT t_item SELECT * FROM INSERTED

--
-- remote node, partition 3
DELETE A FROM rmt3.tpcc.dbo.t_item A, DELETED D WHERE
A.i_id = D.i_id
INSERT rmt3.tpcc.dbo.t_item SELECT * FROM INSERTED

--
-- remote node, partition 4
DELETE A FROM rmt4.tpcc.dbo.t_item A, DELETED D WHERE
A.i_id = D.i_id
INSERT rmt4.tpcc.dbo.t_item SELECT * FROM INSERTED

end
```

item_iot3.sql

```
-- file 2493_to_4984\item_iot.sql

--add item instead-of-trigger for partition 2

set ANSI_DEFAULTS on
set IMPLICIT_TRANSACTIONS off
go

use tpcc
go

drop trigger iot_item
go

create trigger iot_item on item instead of update, insert, delete as
begin

--
-- remote node, partition 1
DELETE A FROM rmt1.tpcc.dbo.t_item A, DELETED D WHERE
A.i_id = D.i_id
INSERT rmt1.tpcc.dbo.t_item SELECT * FROM INSERTED

--
-- local node (parition 2)
DELETE A FROM t_item A, DELETED D WHERE A.i_id = D.i_id
INSERT t_item SELECT * FROM INSERTED

--
-- remote node, partition 3
DELETE A FROM rmt3.tpcc.dbo.t_item A, DELETED D WHERE
A.i_id = D.i_id
INSERT rmt3.tpcc.dbo.t_item SELECT * FROM INSERTED

--
-- remote node, partition 4
DELETE A FROM rmt4.tpcc.dbo.t_item A, DELETED D WHERE
A.i_id = D.i_id
INSERT rmt4.tpcc.dbo.t_item SELECT * FROM INSERTED

end
```

item_iot4.sql

```
-- file 7477_to_9968\item_iot.sql

--add item instead-of-trigger for partition 4

set ANSI_DEFAULTS on
set IMPLICIT_TRANSACTIONS off
go

use tpcc
go

drop trigger iot_item
go

create trigger iot_item on item instead of update, insert, delete as
begin

--
-- remote node, partition 1
```

```
DELETE A FROM rmt1.tpcc.dbo.t_item A, DELETED D WHERE
A.i_id = D.i_id
INSERT rmt1.tpcc.dbo.t_item SELECT * FROM INSERTED

--
-- remote node, partition 2
DELETE A FROM rmt2.tpcc.dbo.t_item A, DELETED D WHERE
A.i_id = D.i_id
INSERT rmt2.tpcc.dbo.t_item SELECT * FROM INSERTED

--
-- remote node, partition 3
DELETE A FROM rmt3.tpcc.dbo.t_item A, DELETED D WHERE
A.i_id = D.i_id
INSERT rmt3.tpcc.dbo.t_item SELECT * FROM INSERTED

--
-- local node (parition 4)
DELETE A FROM t_item A, DELETED D WHERE A.i_id = D.i_id
INSERT t_item SELECT * FROM INSERTED

end
```

backup.sql

```
-- File:    BACKUP.SQL
--          Microsoft TPC-C Benchmark Kit Ver. 4.30
--          Copyright Microsoft, 2000
-- Purpose:  Creates backup of tpcc database


declare @startdate datetime
declare @enddate datetime
select @startdate = getdate()
select 'Start date:', convert(varchar(30),@startdate,9)

dump database tpcc to tpccback1, tpccback2, tpccback3, tpccback4
with init, stats = 1, blocksize = 4096

select @enddate = getdate()
select 'End date: ', convert(varchar(30),@enddate,9)
select 'Elapsed time (in seconds): ', datediff(second, @startdate,
@enddate)

go
```

backupdev.sql

```
-- File:    BACKUPDEVB.SQL
--          Microsoft TPC-C Benchmark Kit Ver. 4.30
--          Copyright Microsoft, 2000
-- Purpose:  Creates tpcc database Backup Devices


use master
go

-- create backup devices

exec sp_addumpdevice 'disk','tpccback1','s:\tpccback1.dmp'
exec sp_addumpdevice 'disk','tpccback2','s:\tpccback2.dmp'
exec sp_addumpdevice 'disk','tpccback3','t:\tpccback3.dmp'
exec sp_addumpdevice 'disk','tpccback4','t:\tpccback4.dmp'
go
```

createdb.sql

```
-- File:    CREATEDB.SQL
--          Microsoft TPC-C Benchmark Kit Ver. 4.30
--          Copyright Microsoft, 2000
-- Purpose:  Creates tpcc database and backup files for 10 warehouses


use master
go

--          Create temporary table for timing

if exists ( select name from sysobjects where name = 'tpcc_timer' )
          drop table tpcc_timer
go

create table tpcc_timer
(
          start_date                                        char(30),
          end_date                                          char(30)
)

insert    into tpcc_timer values (0,0)
go

--          Store starting time

update    tpcc_timer
set       start_date  = (select convert(char(30), getdate(),9))
go

--  create main database files

CREATE DATABASE tpcc
ON PRIMARY
(         NAME              = MSSQL80_tpcc_root,
          FILENAME          = "C:\MSSQL80_tpcc_root.mdf",
          SIZE              = 8MB,
          FILEGROWTH        = 0),
FILEGROUP         misc_fg
(         NAME              = MSSQL80_tpcc_misc_1,
          FILENAME          = "H:",
          SIZE              = 12000MB,
          FILEGROWTH        = 0),
(         NAME              = MSSQL80_tpcc_misc_2,
          FILENAME          = "J:",
          SIZE              = 12000MB,
          FILEGROWTH        = 0),
(         NAME              = MSSQL80_tpcc_misc_3,
          FILENAME          = "L:",
          SIZE              = 12000MB,
          FILEGROWTH        = 0),
(         NAME              = MSSQL80_tpcc_misc_4,
          FILENAME          = "N:",
          SIZE              = 12000MB,
          FILEGROWTH        = 0),
(         NAME              = MSSQL80_tpcc_misc_5,
          FILENAME          = "P:",
          SIZE              = 12000MB,
          FILEGROWTH        = 0),
(         NAME              = MSSQL80_tpcc_misc_6,
          FILENAME          = "R:",
          SIZE              = 12000MB,
          FILEGROWTH        = 0),
FILEGROUP         big_fg
(         NAME              = MSSQL80_tpcc_big_1,
```

```
        FILENAME        = "G:",
        SIZE            = 23800MB,
        FILEGROWTH      = 0),
(       NAME            = MSSQL80_tpcc_big_2,
        FILENAME        = "I:",
        SIZE            = 23800MB,
        FILEGROWTH      = 0),
(       NAME            = MSSQL80_tpcc_big_3,
        FILENAME        = "K:",
        SIZE            = 23800MB,
        FILEGROWTH      = 0),
(       NAME            = MSSQL80_tpcc_big_4,
        FILENAME        = "M:",
        SIZE            = 23800MB,
        FILEGROWTH      = 0),
(       NAME            = MSSQL80_tpcc_big_5,
        FILENAME        = "O:",
        SIZE            = 23800MB,
        FILEGROWTH      = 0),
(       NAME            = MSSQL80_tpcc_big_6,
        FILENAME        = "Q:",
        SIZE            = 23800MB,
        FILEGROWTH      = 0)
LOG ON
(       NAME            = MSSQL80_tpcc_log,
        FILENAME        = "F:",
        SIZE            = 80000MB,
        FILEGROWTH      = 0)
go

-- Store ending time
update  tpcc_timer
set     end_date   = (select convert(char(30), getdate(),9))
go

select "Elapsed time (in seconds): ", datediff(second,(select start_date
from tpcc_timer),(select end_date from tpcc_timer))

--      remove temporary table

if exists ( select name from sysobjects where name = 'tpcc_timer' )
        drop table tpcc_timer
go
```

dbopt1.sql

```
-- File:    DBOPT1.SQL
--          Microsoft TPC-C Benchmark Kit Ver. 4.30
--          Copyright Microsoft, 2000
-- Purpose:  Sets database options for data load


use master
go

exec sp_dboption tpcc,'select into/bulkcopy',true
exec sp_dboption tpcc,'trunc. log on chkpt.',true
exec sp_dboption tpcc,'torn page detection',false
go

use tpcc
go

checkpoint
go
```

dbopt2.sql

```
-- File:    DBOPT2_SHILOH.SQL
--          Microsoft TPC-C Benchmark Kit Ver. 4.30
--          Copyright Microsoft, 2000
-- Purpose:  Resets database options after data load


use master
go

sp_dboption tpcc,'select ',false
go

sp_dboption tpcc,'trunc. ',false
go

use tpcc
go

checkpoint
go

sp_configure allow,1
go

reconfigure with override
go

/*                                      */
/* Set option values for user-defined indexes */
/*                                      */

sp_indexoption  't_customer',   'DisAllowPageLocks',    TRUE
go
sp_indexoption          't_district', 'DisAllowPageLocks',TRUE
go
sp_indexoption          't_warehouse',          'DisAllowPageLocks',
TRUE
go
sp_indexoption          't_stock',    'DisAllowPageLocks',TRUE
go
sp_indexoption          't_order_line',         'DisAllowRowLocks',
TRUE
go
sp_indexoption          't_orders',   'DisAllowRowLocks', TRUE
go
sp_indexoption          't_new_order',          'DisAllowRowLocks',
TRUE
go
sp_indexoption          't_item',     'DisAllowRowLocks', TRUE
go
sp_indexoption          't_item',     'DisAllowPageLocks',TRUE
go

Print ' '
Print '********************'
Print 'Pre-specified Locking Hierarchy:'
Print '   Lockflag = 0 ==> No pre-specified hierarchy'
Print '   Lockflag = 1 ==> Lock at Page-level then Table-level'
Print '   Lockflag = 2 ==> Lock at Row-level then Table-level'
Print '   Lockflag = 3 ==> Lock at Table-level'
Print ' '

select      name,lockflags
from        sysindexes
where       object_id("t_warehouse")        = id or
```

```
            object_id("t_district")         = id or
            object_id("t_customer")                 = id or
            object_id("t_stock")            = id or
            object_id("t_orders")           = id or
            object_id("t_order_line")       = id or
            object_id("t_history")          = id or
            object_id("t_new_order")        = id or
            object_id("t_item")             = id
order       by lockflags asc
go

sp_configure allow,0
go

reconfigure with override
go

exec sp_dboption tpcc,          'auto update statistics',
FALSE
exec sp_dboption tpcc,          'auto create statistics', FALSE
go

exec sp_tableoption   "t_district",          "pintable",true
exec sp_tableoption   "t_warehouse",         "pintable",true
exec sp_tableoption   "t_new_order",         "pintable",true
exec sp_tableoption   "t_item",   "pintable",true
go
```

idxcuscl.sql

```
-- File:    IDXCUSCL.SQL
--          Microsoft TPC-C Benchmark Kit Ver. 4.30
--          Copyright Microsoft, 2000
-- Purpose:  Creates clustered index on customer table

set ANSI_DEFAULTS on
set IMPLICIT_TRANSACTIONS off
set QUOTED_IDENTIFIER off
go

use tpcc
go

declare @startdate datetime
declare @enddate datetime
select @startdate = getdate()
select "Start date:", convert(varchar(30),@startdate,9)

if exists (select o.name from sysconstraints c, sysobjects o
where c.id = object_id('t_customer') and c.constid = o.id and o.name =
'customer_c1PK' )
   alter table t_customer drop constraint customer_c1PK

alter table t_customer add constraint customer_c1PK primary key
clustered (c_w_id, c_d_id, c_id)
              on big_fg

select @enddate = getdate()
select "End date: ", convert(varchar(30),@enddate,9)
select "Elapsed time (in seconds): ", datediff(second, @startdate,
@enddate)

go
```

idxcusnc.sql

```
-- File:    IDXCUSNC.SQL
--          Microsoft TPC-C Benchmark Kit Ver. 4.30
--          Copyright Microsoft, 2000
-- Purpose:  Creates non-clustered index on customer table

set ANSI_DEFAULTS on
set IMPLICIT_TRANSACTIONS off
set QUOTED_IDENTIFIER off
go

use tpcc
go

declare @startdate datetime
declare @enddate datetime
select @startdate = getdate()
select "Start date:", convert(varchar(30),@startdate,9)

if exists ( select name from sysindexes where  name = 'customer_nc1' )
              drop index t_customer.customer_nc1

create unique nonclustered index customer_nc1 on t_customer(c_w_id,
c_d_id, c_last, c_first, c_id)
              on big_fg

select @enddate = getdate()
select "End date: ", convert(varchar(30),@enddate,9)
select "Elapsed time (in seconds): ", datediff(second, @startdate,
@enddate)

go
```

idxdiscl.sql

```
-- File:    IDXDISCL.SQL
--          Microsoft TPC-C Benchmark Kit Ver. 4.20
--          Copyright Microsoft, 2000
-- Purpose:  Creates clustered index on district table

set ANSI_DEFAULTS on
set IMPLICIT_TRANSACTIONS off
set QUOTED_IDENTIFIER off
go

use tpcc
go

declare @startdate datetime
declare @enddate datetime
select @startdate = getdate()
select "Start date:", convert(varchar(30),@startdate,9)

if exists (select o.name from sysconstraints c, sysobjects o
where c.id = object_id('t_district') and c.constid = o.id and o.name =
'district_c1PK' )
   alter table t_district drop constraint district_c1PK

alter table t_district add constraint district_c1PK primary key clustered
(d_w_id, d_id)
              with fillfactor=100
              on misc_fg

select @enddate = getdate()
select "End date: ", convert(varchar(30),@enddate,9)
select "Elapsed time (in seconds): ", datediff(second, @startdate,
@enddate)
```

```
go
```

idxitmcl.sql

```
-- File:    IDXITMCL.SQL
--          Microsoft TPC-C Benchmark Kit Ver. 4.30
--          Copyright Microsoft, 2000
-- Purpose:  Creates clustered index on item table

set ANSI_DEFAULTS on
set IMPLICIT_TRANSACTIONS off
set QUOTED_IDENTIFIER off
go

use tpcc
go

declare @startdate datetime
declare @enddate datetime
select @startdate = getdate()
select "Start date:", convert(varchar(30),@startdate,9)

if exists ( select name from sysindexes where  name = 'item_c1' )
              drop index t_item.item_c1

create unique clustered index item_c1 on t_item(i_id)
              on misc_fg

select @enddate = getdate()
select "End date: ", convert(varchar(30),@enddate,9)
select "Elapsed time (in seconds): ", datediff(second, @startdate,
@enddate)

go
```

idxnodcl.sql

```
-- File:    IDXNODCL.SQL
--          Microsoft TPC-C Benchmark Kit Ver. 4.30
--          Copyright Microsoft, 2000
-- Purpose:  Creates clustered index on new_order table

set ANSI_DEFAULTS on
set IMPLICIT_TRANSACTIONS off
set QUOTED_IDENTIFIER off
go

use tpcc
go

declare @startdate datetime
declare @enddate datetime
select @startdate = getdate()
select "Start date:", convert(varchar(30),@startdate,9)

if exists (select o.name from sysconstraints c, sysobjects o
where c.id = object_id('t_new_order') and c.constid = o.id and o.name
= 't_new_order_c1PK' )
   alter table t_new_order drop constraint new_order_c1PK

alter table t_new_order add constraint new_order_c1PK primary key
clustered (no_w_id, no_d_id, no_o_id)
              on misc_fg

select @enddate = getdate()
select "End date: ", convert(varchar(30),@enddate,9)
select "Elapsed time (in seconds): ", datediff(second, @startdate,
@enddate)

go
```

idxodlcl.sql

```
-- File:    IDXODLCL.SQL
--          Microsoft TPC-C Benchmark Kit Ver. 4.30
--          Copyright Microsoft, 2000
-- Purpose:  Creates clustered index on order_line table

set ANSI_DEFAULTS on
set IMPLICIT_TRANSACTIONS off
set QUOTED_IDENTIFIER off
go

use tpcc
go

declare @startdate datetime
declare @enddate datetime
select @startdate = getdate()
select "Start date:", convert(varchar(30),@startdate,9)

if exists (select o.name from sysconstraints c, sysobjects o
where c.id = object_id('t_order_line') and c.constid = o.id and o.name
= 'order_line_c1PK' )
   alter table t_order_line drop constraint order_line_c1PK

alter table t_order_line add constraint order_line_c1PK primary key
clustered (ol_w_id, ol_d_id, ol_o_id, ol_number)
              on misc_fg

select @enddate = getdate()
select "End date: ", convert(varchar(30),@enddate,9)
select "Elapsed time (in seconds): ", datediff(second, @startdate,
@enddate)

go
```

idxordcl.sql

```
-- File:    IDXORDCL.SQL
--          Microsoft TPC-C Benchmark Kit Ver. 4.30
--          Copyright Microsoft, 2000
-- Purpose:  Creates clustered index on orders table

set ANSI_DEFAULTS on
set IMPLICIT_TRANSACTIONS off
set QUOTED_IDENTIFIER off
go

use tpcc
go

declare @startdate datetime
declare @enddate datetime
select @startdate = getdate()
select "Start date:", convert(varchar(30),@startdate,9)

if exists (select o.name from sysconstraints c, sysobjects o
where c.id = object_id('t_orders') and c.constid = o.id and o.name =
'orders_c1PK' )
   alter table t_orders drop constraint orders_c1PK
```

```
alter table t_orders add constraint orders_c1PK primary key clustered
(o_w_id, o_d_id, o_id)
        on misc_fg

select @enddate = getdate()
select "End date: ", convert(varchar(30),@enddate,9)
select "Elapsed time (in seconds): ", datediff(second, @startdate,
@enddate)

go
```

idxordnc.sql

```
-- File:    IDXORDNC.SQL
--          Microsoft TPC-C Benchmark Kit Ver. 4.30
--          Copyright Microsoft, 2000
-- Purpose:  Creates non-clustered index on orders table

set ANSI_DEFAULTS on
set IMPLICIT_TRANSACTIONS off
set QUOTED_IDENTIFIER off
go

use tpcc
go

declare @startdate datetime
declare @enddate datetime
select @startdate = getdate()
select "Start date:", convert(varchar(30),@startdate,9)

if exists ( select name from sysindexes where  name = 'orders_nc1' )
        drop index t_orders.orders_nc1

create index orders_nc1 on t_orders(o_w_id, o_d_id, o_c_id, o_id)
        on misc_fg

select @enddate = getdate()
select "End date: ", convert(varchar(30),@enddate,9)
select "Elapsed time (in seconds): ", datediff(second, @startdate,
@enddate)

go
```

idxstkcl.sql

```
-- File:    IDXSTKCL.SQL
--          Microsoft TPC-C Benchmark Kit Ver. 4.30
--          Copyright Microsoft, 2000
-- Purpose:  Creates clustered index on stock table

set ANSI_DEFAULTS on
set IMPLICIT_TRANSACTIONS off
set QUOTED_IDENTIFIER off
go

use tpcc
go

declare @startdate datetime
declare @enddate datetime
select @startdate = getdate()
select "Start date:", convert(varchar(30),@startdate,9)

if exists (select o.name from sysconstraints c, sysobjects o
where c.id = object_id('t_stock') and c.constid = o.id and o.name =
'stock_c1PK' )
   alter table t_stock drop constraint stock_c1PK

alter table t_stock add constraint stock_c1PK primary key clustered
(s_i_id, s_w_id)
        on big_fg

select @enddate = getdate()
select "End date: ", convert(varchar(30),@enddate,9)
select "Elapsed time (in seconds): ", datediff(second, @startdate,
@enddate)

go
```

idxwarcl.sql

```
-- File:    IDXWARCL.SQL
--          Microsoft TPC-C Benchmark Kit Ver. 4.30
--          Copyright Microsoft, 2000
-- Purpose:  Creates clustered index on warehouse table

set ANSI_DEFAULTS on
set IMPLICIT_TRANSACTIONS off
set QUOTED_IDENTIFIER off
go

use tpcc
go

declare @startdate datetime
declare @enddate datetime
select @startdate = getdate()
select "Start date:", convert(varchar(30),@startdate,9)

if exists (select o.name from sysconstraints c, sysobjects o
where c.id = object_id('t_warehouse') and c.constid = o.id and o.name
= 'warehouse_c1PK' )
   alter table t_warehouse drop constraint warehouse_c1PK

alter table t_warehouse add constraint warehouse_c1PK primary key
clustered (w_id)
        with fillfactor=100
        on misc_fg

select @enddate = getdate()
select "End date: ", convert(varchar(30),@enddate,9)
select "Elapsed time (in seconds): ", datediff(second, @startdate,
@enddate)

go
```

tables.sql

```
-- File:    TABLES.SQL
--          Microsoft TPC-C Benchmark Kit Ver. 4.30
--          Copyright Microsoft, 2000
-- Purpose:  Creates TPC-C tables


set ANSI_DEFAULTS on
set IMPLICIT_TRANSACTIONS off
set QUOTED_IDENTIFIER off
```

```
SET ANSI_NULL_DFLT_ONoff



go



use tpcc
go

--
--  Remove all existing TPC-C tables, views, etc.
--

if objectproperty(object_id('warehouse'), 'IsView') is not null
        drop view warehouse
go
if objectproperty(object_id('district'), 'IsView') is not null
        drop view district
go
if objectproperty(object_id('customer'), 'IsView') is not null
        drop view customer
go
if objectproperty(object_id('history'), 'IsView') is not null
        drop view history
go
if objectproperty(object_id('stock'), 'IsView') is not null
        drop view stock
go
if objectproperty(object_id('orders'), 'IsView') is not null
        drop view orders
go
if objectproperty(object_id('order_line'), 'IsView') is not null
        drop view order_line
go
if objectproperty(object_id('new_order'), 'IsView') is not null
        drop view new_order
go
if objectproperty(object_id('item'), 'IsView') is not null
        drop view item
go




if objectproperty(object_id('t_warehouse'), 'IsTable') is not null
        drop table t_warehouse
go
if objectproperty(object_id('t_district'), 'IsTable') is not null
        drop table t_district
go
if objectproperty(object_id('t_customer'), 'IsTable') is not null
        drop table t_customer
go
if objectproperty(object_id('t_history'), 'IsTable') is not null
        drop table t_history
go
if objectproperty(object_id('t_new_order'), 'IsTable') is not null
        drop table t_new_order
go
if objectproperty(object_id('t_orders'), 'IsTable') is not null
        drop table t_orders
go
if objectproperty(object_id('t_order_line'), 'IsTable') is not null
        drop table t_order_line
go
if objectproperty(object_id('t_item'), 'IsTable') is not null
        drop table t_item
go
if objectproperty(object_id('t_stock'), 'IsTable') is not null
        drop table t_stock
go



--
--  Create new tables
--

create table t_warehouse
(
        w_id                            int,
        w_name                          char(10),
        w_street_1              char(20),
        w_street_2              char(20),
        w_city                          char(20),
        w_state                         char(2),
        w_zip                           char(9),
        w_tax                           numeric(4,4),
        w_ytd                           numeric(12,2)
) on misc_fg
go
```

```
create table t_district
(
        d_id                    tinyint,
        d_w_id                  int,
        d_name                  char(10),
        d_street_1      char(20),
        d_street_2      char(20),
        d_city                  char(20),
        d_state                 char(2),
        d_zip                   char(9),
        d_tax                   numeric(4,4),
        d_ytd                   numeric(12,2),
        d_next_o_id             int
) on misc_fg
go

create table t_customer
(
        c_id                    int,
        c_d_id                  tinyint,
        c_w_id                  int,
        c_first                 char(16),
        c_middle        char(2),
        c_last                  char(16),
        c_street_1      char(20),
        c_street_2      char(20),
        c_city                  char(20),
        c_state                 char(2),
        c_zip                   char(9),
        c_phone                 char(16),
        c_since                 datetime,
        c_credit        char(2),
        c_credit_lim            numeric(12,2),
        c_discount      numeric(4,4),
        c_balance       numeric(12,2),
        c_ytd_payment           numeric(12,2),
        c_payment_cnt           smallint,
        c_delivery_cnt          smallint,
        c_data                  char(500)
) on big_fg
go

create table t_history
(
        h_c_id                  int,
        h_c_d_id                tinyint,
        h_c_w_id                int,
        h_d_id                  tinyint,
        h_w_id                  int,
        h_date                  datetime,
        h_amount        numeric(6,2),
        h_data                  char(24),
        constraint history_c1PK primary key clustered (h_w_id,
h_d_id, h_c_id, h_date)
) on misc_fg
go

create table t_new_order
(
        no_o_id                 int,
        no_d_id                 tinyint,
        no_w_id                 int
) on misc_fg
go

create table t_orders
(
        o_id                    int,
        o_d_id                  tinyint,
        o_w_id                  int,
        o_c_id                  int,
        o_entry_d       datetime,
        o_carrier_id            tinyint,
        o_ol_cnt        tinyint,
        o_all_local     tinyint
) on misc_fg
go

create table t_order_line
(
        ol_o_id                 int,
        ol_d_id                 tinyint,
        ol_w_id                 int,
        ol_number       tinyint,
        ol_i_id                 int,
        ol_supply_w_id          int,
        ol_delivery_d           datetime,
        ol_quantity             smallint,
        ol_amount       numeric(6,2),
        ol_dist_info            char(24)
) on misc_fg
```

```
go


create table t_item
(
        i_id                            int,
        i_im_id                         int,
        i_name                          char(24),
        i_price                         numeric(5,2),
        i_data                          char(50)
) on misc_fg
go


create table t_stock
(
        s_i_id                          int,
        s_w_id                          int,
        s_quantity              smallint,
        s_dist_01               char(24),
        s_dist_02               char(24),
        s_dist_03               char(24),
        s_dist_04               char(24),
        s_dist_05               char(24),
        s_dist_06               char(24),
        s_dist_07               char(24),
        s_dist_08               char(24),
        s_dist_09               char(24),
        s_dist_10               char(24),
        s_ytd                           int,
        s_order_cnt                     smallint,
        s_remote_cnt                    smallint,
        s_data                          char(50)
) on big_fg
go
```

restore.sql

```
-- File:    RESTORE.SQL
--          Microsoft TPC-C Benchmark Kit Ver. 4.30
--          Copyright Microsoft, 2000
-- Purpose:  Loads database backup from backup files


declare @startdate datetime
declare @enddate datetime
select @startdate = getdate()
select 'Start date:', convert(varchar(30),@startdate,9)

load database tpcc from tpccback1, tpccback2, tpccback3, tpccback4
with stats = 1, replace

select @enddate = getdate()
select 'End date: ', convert(varchar(30),@enddate,9)
select 'Elapsed time (in seconds): ', datediff(second, @startdate,
@enddate)

go
```

removedb.sql

```
-- File:    REMOVEDB.SQL
--          Microsoft TPC-C Benchmark Kit Ver. 4.30
--          Copyright Microsoft, 2000
-- Purpose:  Removes tpcc database and backup files


use master
go

-- remove any existing database and backup files

exec sp_dbremove tpcc, dropdev
go

exec sp_dropdevice 'tpccback1'
exec sp_dropdevice 'tpccback2'
exec sp_dropdevice 'tpccback3'
exec sp_dropdevice 'tpccback4'
go
```

version.sql

```
-- File:    VERSION.SQL
--          Microsoft TPC-C Benchmark Kit Ver. 4.10
--          Copyright Microsoft, 1999
-- Purpose:  Returns version level of TPC-C stored procs
-- Note:    Always update the return value of this proc for
--          any interface changes or 'must have' bug fixes.



set ANSI_DEFAULTS on
set IMPLICIT_TRANSACTIONS off
go


use tpcc
go


if exists ( select name from sysobjects where name = 'tpcc_version' )
            drop procedure tpcc_version
go


create proc tpcc_version
as
declare     @version   char(8)
```

```
begin
        select @version = '4.10.000'
        select @version as 'Version'
end

go
```

Load Source Code

getargs.c

```
//      File:           GETARGS.C
//                              Microsoft TPC-C Kit Ver. 4.30
//                              Copyright Microsoft, 1996, 1997, 1998, 1999, 2000
//      Purpose:    Source file for command line processing


// Includes
#include "tpcc.h"

//==============================================================================
//
// Function name: GetArgsLoader
//
//==============================================================================

void GetArgsLoader(int argc, char **argv, TPCCLDR_ARGS *pargs)
{
   int          i;
   char     *ptr;

#ifdef DEBUG
   printf("[%ld]DBG: Entering GetArgsLoader()\n", (int) GetCurrentThreadId());
#endif

   /* init args struct with some useful values */
   pargs->server                = SERVER;
   pargs->user          = USER;
   pargs->password              = PASSWORD;
   pargs->database              = DATABASE;
   pargs->batch                 = BATCH;
   pargs->num_warehouses        = UNDEF;
        pargs->tables_all               = TRUE;
        pargs->table_item               = FALSE;
        pargs->table_warehouse          = FALSE;
        pargs->table_customer           = FALSE;
        pargs->table_orders             = FALSE;
        pargs->loader_res_file          = LOADER_RES_FILE;
        pargs->pack_size        = DEFLDPACKSIZE;
        pargs->starting_warehouse       = DEF_STARTING_WAREHOUSE;
        pargs->build_index              = BUILD_INDEX;
        pargs->index_order              = INDEX_ORDER;
        pargs->index_script_path        = INDEX_SCRIPT_PATH;
        pargs->scale_down               = SCALE_DOWN;

   /* check for zero command line args */
   if ( argc == 1 )
                GetArgsLoaderUsage();

   for (i = 1; i < argc; ++i)
   {
                if (argv[i][0] != '-' && argv[i][0] != '/')
                {
                printf("\nUnrecognized command");
                GetArgsLoaderUsage();
                exit(1);
                }

                ptr = argv[i];

                switch (ptr[1])
                {
                case 'h':    /* Fall throught */
                case 'H':
                                GetArgsLoaderUsage();
                                break;

                case 'D':
                                pargs->database = ptr+2;
                                break;

                case 'P':
                                pargs->password = ptr+2;
                                break;

                case 'S':
                                pargs->server = ptr+2;
                                break;

                case 'U':
                                pargs->user = ptr+2;
                                break;

                case 'b':
                                pargs->batch = atol(ptr+2);
                                break;

                case 'W':
                                pargs->num_warehouses = atol(ptr+2);
                                break;

                case 's':
                                pargs->starting_warehouse = atol(ptr+2);
                                break;

                case 't':
                                {
                                pargs->tables_all = FALSE;
                                if (strcmp(ptr+2,"item") == 0)
                                pargs->table_item = TRUE;
                                else if (strcmp(ptr+2,"warehouse") == 0)
```

```
pargs->table_warehouse = TRUE;
                                        else if
(strcmp(ptr+2,"customer") == 0)

pargs->table_customer = TRUE;
                                        else if
(strcmp(ptr+2,"orders") == 0)

pargs->table_orders = TRUE;
                                        else
                                        {

printf("\nUnrecognized command");

GetArgsLoaderUsage();
                                        exit(1);
                                        }

                                        break;
                                }

                        case 'f':
                                pargs->loader_res_file =
ptr+2;
                                break;

                        case 'p':
                                pargs->pack_size =
atol(ptr+2);
                                break;

                        case 'i':
                                pargs->build_index =
atol(ptr+2);
                                break;

                        case 'o':
                                pargs->index_order =
atol(ptr+2);
                                break;

                        case 'c':
                                pargs->scale_down =
atol(ptr+2);
                                break;

                case 'd':
                                pargs->index_script_path
= ptr+2;
                                break;

                default:
                        GetArgsLoaderUsage();
                        exit(-1);
                        break;
                }
    }

    /* check for required args */
    if (pargs->num_warehouses == UNDEF )
    {
                printf("Number of Warehouses is required\n");
                exit(-2);
    }

    return;
}
```

```
//==============================================
=====================
//
// Function name: GetArgsLoaderUsage
//
//==============================================
=====================

void GetArgsLoaderUsage()
{

#ifdef DEBUG
    printf("[%ld]DBG: Entering GetArgsLoaderUsage()\n",(int)
GetCurrentThreadId());
#endif


    printf("TPCCLDR:\n\n");
                printf("Parameter                                   Default\n");


printf("-------------------------------------------------------------\n");
    printf("-W Number of Warehouses to Load                 Required
\n");
    printf("-S Server                                  %s\n", SERVER);
    printf("-U Username                                  %s\n", USER);
    printf("-P Password                                 %s\n",
PASSWORD);
    printf("-D Database                                  %s\n", DATABASE);
                printf("-b Batch Size                                %ld\n",
(long) BATCH);
                printf("-p TDS packet size                           %ld\n",
(long) DEFLDPACKSIZE);
                printf("-f Loader Results Output Filename
%s\n", LOADER_RES_FILE);
                printf("-s Starting Warehouse                        %ld\n",
(long) DEF_STARTING_WAREHOUSE);
                printf("-i Build Option (data = 0, data and index = 1)
%ld\n", (long) BUILD_INDEX);
                printf("-o Cluster Index Build Order (before = 1, after = 0)
%ld\n", (long) INDEX_ORDER);
                printf("-c Build Scaled Database (normal = 0, tiny = 1)
%ld\n", (long) SCALE_DOWN);
                printf("-d Index Script Path                         %s\n",
INDEX_SCRIPT_PATH);
                printf("-t Table to Load                             all tables
\n");
    printf("   [item|warehouse|customer|orders]\n");
    printf("   Notes: \n");
    printf("     - the '-t' parameter may be included multiple times to \n");

    printf("       specify multiple tables to be loaded \n");
    printf("     - 'item' loads ITEM table \n");
    printf("     - 'warehouse' loads WAREHOUSE, DISTRICT, and
STOCK tables \n");
    printf("     - 'customer' loads CUSTOMER and HISTORY tables
\n");
    printf("     - 'orders' load NEW-ORDER, ORDERS, ORDER-LINE
tables \n");

                printf("\nNote:  Command line switches are case
sensitive.\n");

    exit(0);
}
```

random.c

```
//          File:                    RANDOM.C
//                                                  Microsoft TPC-C Kit Ver.
4.30
//                                                  Copyright Microsoft,
1996, 1997, 1998, 1999, 2000
//          Purpose:    Random number generation routines for
database loader


// Includes
#include "tpcc.h"
#include "math.h"

// Defines
#define A          16807
#define M      2147483647
#define Q         127773      /* M div A */
#define R           2836      /* M mod A */
#define Thread          __declspec(thread)

// Globals
long        Thread Seed = 0;      /* thread local seed */

/*********************************************************
********************
*                                                       *
* random -                                                *
*      Implements a GOOD pseudo random number generator.  This
generator    *
*      will/should? run the complete period before repeating.          *
*                                                       *
* Copied from:                                            *
*      Random Numbers Generators: Good Ones Are Hard to Find.
     *
*      Communications of the ACM - October 1988 Volume 31
Number 10        *
*                                                       *
* Machine Dependencies:                                     *
*      long must be 2 ^ 31 - 1 or greater.                    *
*                                                       *
*********************************************************
********************/

/*********************************************************
********************
* seed - load the Seed value used in irand and drand.  Should be used
before  *
*      first call to irand or drand.                        *
*********************************************************
********************/

void seed(long val)
{

#ifdef DEBUG
   printf("[%ld]DBG: Entering seed()...\n", (int)
GetCurrentThreadId());
            printf("Old Seed %ld New Seed %ld\n",Seed, val);
#endif

   if ( val < 0 )
               val = abs(val);
   Seed = val;

}


/*********************************************************
********************
*                                                       *
* irand - returns a 32 bit integer pseudo random number with a period
of    *
*      1 to 2 ^ 32 - 1.                                    *
*                                                       *
* parameters:                                              *
*      none.                                              *
*                                                       *
* returns:                                                 *
*      32 bit integer - defined as long ( see above ).          *
*                                                       *
* side effects:                                            *
*      seed get recomputed.                                  *
*********************************************************
*******************/

long irand()
{
   register long    s;     /* copy of seed */
   register long    test;   /* test flag */
   register long    hi;     /* tmp value for speed */
   register long    lo;     /* tmp value for speed */

#ifdef DEBUG
   printf("[%ld]DBG: Entering irand()...\n", (int)
GetCurrentThreadId());
#endif

   s = Seed;
   hi = s / Q;
   lo = s % Q;

   test = A * lo - R * hi;
   if ( test > 0 )
                        Seed = test;
   else
                        Seed = test + M;

   return( Seed );
}


/*********************************************************
********************
*                                                       *
* drand - returns a double pseudo random number between 0.0 and 1.0.
     *
*      See irand.                                         *
*********************************************************
*******************/
double drand()
{

#ifdef DEBUG
   printf("[%ld]DBG: Entering drand()...\n", (int)
GetCurrentThreadId());
#endif

   return( (double)irand() / 2147483647.0);
}
```

```
//==================================================
=====================
// Function   : RandomNumber
//
// Description:
//==================================================
=====================
long RandomNumber(long lower, long upper)
{
   long rand_num;

#ifdef DEBUG
   printf("[%ld]DBG: Entering RandomNumber()...\n", (int)
GetCurrentThreadId());
#endif

            if ( upper == lower )   /* pgd 08-13-96 perf enhancement */
                        return lower;

            upper++;

   if ( upper <= lower )
                        rand_num = upper;
   else
                        rand_num = lower + irand() % (upper - lower);
/* pgd 08-13-96 perf enhancement */


#ifdef DEBUG
   printf("[%ld]DBG: RandomNumber between %ld & %ld ==>
%ld\n",
                                                (int)
GetCurrentThreadId(), lower, upper, rand_num);
#endif


   return rand_num;
}


#if 0

//Orginal code pgd 08/13/96

long RandomNumber(long lower,
                                                long upper)
{
   long rand_num;

#ifdef DEBUG
   printf("[%ld]DBG: Entering RandomNumber()...\n", (int)
GetCurrentThreadId());
#endif

            upper++;

   if ((upper <= lower))
                        rand_num = upper;
   else
                        rand_num = lower + irand() % ((upper > lower)
? upper - lower : upper);


#ifdef DEBUG
   printf("[%ld]DBG: RandomNumber between %ld & %ld ==>
%ld\n",
                                                (int)
GetCurrentThreadId(), lower, upper, rand_num);
#endif


   return rand_num;
}
#endif

//==================================================
=====================
// Function   : NURand
//
// Description:
//==================================================
=====================
long NURand(int iConst,
                long x,
                long y,
                long C)
{
   long rand_num;

#ifdef DEBUG
   printf("[%ld]DBG: Entering NURand()...\n", (int)
GetCurrentThreadId());
#endif

   rand_num = (((RandomNumber(0,iConst) | RandomNumber(x,y)) +
C) % (y-x+1))+x;

#ifdef DEBUG
   printf("[%ld]DBG: NURand: num = %d\n", (int)
GetCurrentThreadId(), rand_num);
#endif

   return rand_num;
}
```

strings.c

```
//          File:                   STRINGS.C
//                                          Microsoft TPC-C Kit Ver.
4.30
//                                          Copyright Microsoft,
1996, 1997, 1998, 1999, 2000
//          Purpose:    Source file for database loader string functions


// Includes
#include "tpcc.h"
#include <string.h>
#include <ctype.h>

//==================================================
=====================
//
// Function name: MakeAddress
//
//==================================================
=====================

void MakeAddress(char *street_1,
                                            char *street_2,
                                            char *city,
                                            char *state,
```

```
                                        char *zip)
{

#ifdef DEBUG
   printf("[%ld]DBG: Entering MakeAddress()\n", (int)
GetCurrentThreadId());
#endif

   MakeAlphaString (10, 20, ADDRESS_LEN, street_1);
   MakeAlphaString (10, 20, ADDRESS_LEN, street_2);
   MakeAlphaString (10, 20, ADDRESS_LEN, city);
   MakeAlphaString ( 2,  2, STATE_LEN, state);
   MakeZipNumberString( 9,  9, ZIP_LEN, zip);

#ifdef DEBUG
   printf("[%ld]DBG: MakeAddress: street_1: %s, street_2: %s, city:
%s, state: %s, zip: %s\n",
                        (int) GetCurrentThreadId(), street_1,
street_2, city, state, zip);
#endif

   return;

}


//================================================
=====================
//
// Function name: LastName
//
//================================================
=====================

void LastName(int  num,
                  char *name)
{
   static char *n[] =
   {
                  "BAR" , "OUGHT", "ABLE" , "PRI"  , "PRES",
                  "ESE" , "ANTI" , "CALLY", "ATION", "EING"
   };

#ifdef DEBUG
   printf("[%ld]DBG: Entering LastName()\n", (int)
GetCurrentThreadId());
#endif

   if ((num >= 0) && (num < 1000))
   {
                  strcpy(name, n[(num/100)%10]);
                  strcat(name, n[(num/10)%10]);
                  strcat(name, n[(num/1)%10]);

                  if (strlen(name) < LAST_NAME_LEN)
                  {
                        PaddString(LAST_NAME_LEN,
name);
                  }

   }
   else
   {
                  printf("\nError in LastName()... num <%ld> out
of range (0,999)\n", num);
                  exit(-1);
   }

#ifdef DEBUG
   printf("[%ld]DBG: LastName: num = [%d] ==> [%d][%d][%d]\n",
                        (int) GetCurrentThreadId(), num,
num/100, (num/10)%10, num%10);
            printf("[%ld]DBG: LastName: String = %s\n", (int)
GetCurrentThreadId(), name);
#endif

   return;

}


//================================================
=====================
//
// Function name: MakeAlphaString
//
//================================================
=====================

//philipdu 08/13/96 Changed MakeAlphaString to use A-Z, a-z, and
0-9 in
//accordance with spec see below:
//The spec says:
//4.3.2.2     The notation random a-string [x .. y]
//(respectively, n-string [x .. y]) represents a string of random
alphanumeric
//(respectively, numeric) characters of a random length of minimum x,
maximum y,
//and mean (y+x)/2. Alphanumerics are A..Z, a..z, and 0..9.  The only
other
//requirement is that the character set used "must be able to represent a
minimum
//of 128 different characters".  We are using 8-bit chars, so this is a non
issue.
//It is completely unreasonable to stuff non-printing chars into the text
fields.
//-CLevine 08/13/96

int MakeAlphaString( int  x, int  y, int  z, char *str)
{
            int                  len;
            int                  i;
   char    cc = 'a';
            static      char chArray[] =
"0123456789ABCDEFGHIJKLMNOPQRSTUVWXYZabcdefghijklm
nopqrstuvwxyz";
            static      int         chArrayMax = 61;

#ifdef DEBUG
   printf("[%ld]DBG: Entering MakeAlphaString()\n", (int)
GetCurrentThreadId());
#endif

            len= RandomNumber(x, y);

            for (i=0; i<len; i++)
            {
                  cc = chArray[RandomNumber(0, chArrayMax)];
      str[i] = cc;
   }
            if ( len < z )
                  memset(str+len, ' ', z - len);
            str[z] = 0;

   return len;
```

```
}


//================================================
=====================
//
// Function name: MakeOriginalAlphaString
//
//================================================
=====================

int MakeOriginalAlphaString(int  x,

int  y,

int  z,

char *str,
                                                        int
percent)
{
   int                  len;
   int                  val;
   int                  start;

#ifdef DEBUG
   printf("[%ld]DBG: Entering MakeOriginalAlphaString()\n", (int)
GetCurrentThreadId());
#endif

   // verify prercentage is valid
   if ((percent < 0) || (percent > 100))
   {
                        printf("MakeOrigianlAlphaString: Invalid
percentage: %d\n", percent);
                        exit(-1);
   }

   // verify string is at least 8 chars in length
   if ((x + y) <= 8)
   {
                        printf("MakeOriginalAlphaString: string length
must be >= 8\n");
                        exit(-1);
   }

   // Make Alpha String
   len = MakeAlphaString(x,y, z, str);

   val = RandomNumber(1,100);
   if (val <= percent)
   {
                        start = RandomNumber(0, len - 8);
                        strncpy(str + start, "ORIGINAL", 8);
   }


#ifdef DEBUG
   printf("[%ld]DBG: MakeOriginalAlphaString: : %s\n",
                                (int) GetCurrentThreadId(), str);
#endif

   return strlen(str);
}


//================================================
=====================
//
// Function name: MakeNumberString
//
//================================================
=====================
int MakeNumberString(int  x, int  y, int  z, char *str)
{
                char tmp[16];

                //MakeNumberString is always called
MakeZipNumberString(16, 16, 16, string)

                memset(str, '0', 16);
                itoa(RandomNumber(0, 99999999), tmp, 10);
                memcpy(str, tmp, strlen(tmp));

                itoa(RandomNumber(0, 99999999), tmp, 10);
                memcpy(str+8, tmp, strlen(tmp));

                str[16] = 0;

   return 16;
}


//================================================
=====================
//
// Function name: MakeZipNumberString
//
//================================================
=====================
int MakeZipNumberString(int  x, int  y, int  z, char *str)
{
                char tmp[16];

                //MakeZipNumberString is always called
MakeZipNumberString(9, 9, 9, string)

                strcpy(str, "000011111");

                itoa(RandomNumber(0, 9999), tmp, 10);
                memcpy(str, tmp, strlen(tmp));

   return 9;
}


//================================================
=====================
//
// Function name: InitString
//
//================================================
=====================
void InitString(char *str, int len)
{
#ifdef DEBUG
   printf("[%ld]DBG: Entering InitString()\n", (int)
GetCurrentThreadId());
#endif

                memset(str, ' ', len);
   str[len] = 0;
}
```

```
//==============================================================
// Function name: InitAddress
//
// Description:
//
//==============================================================

void InitAddress(char *street_1, char *street_2, char *city, char *state,
char *zip)
{
        memset(street_1, ' ', ADDRESS_LEN+1);
        memset(street_2, ' ', ADDRESS_LEN+1);
        memset(city, ' ', ADDRESS_LEN+1);

   street_1[ADDRESS_LEN+1] = 0;
   street_2[ADDRESS_LEN+1] = 0;
   city[ADDRESS_LEN+1]     = 0;

        memset(state, ' ', STATE_LEN+1);
   state[STATE_LEN+1] = 0;

        memset(zip, ' ', ZIP_LEN+1);
   zip[ZIP_LEN+1] = 0;
}


//==============================================================
//
// Function name: PaddString
//
//==============================================================

void PaddString(int max, char *name)
{
        int             len;

        len = strlen(name);
        if ( len < max )
                memset(name+len, ' ', max - len);
        name[max] = 0;

        return;
}
```

time.c

```
//      File:           TIME.C
//                                      Microsoft TPC-C Kit Ver.
4.30
//                                      Copyright Microsoft,
1996, 1997, 1998, 1999,2000
//      Purpose:    Source file for time functions


// Includes
#include "tpcc.h"

// Globals
static long start_sec;

//==============================================================
//
// Function name: TimeNow
//
//==============================================================

long TimeNow()
{
  long          time_now;
  struct    _timeb el_time;

#ifdef DEBUG
   printf("[%ld]DBG: Entering TimeNow()\n", (int)
GetCurrentThreadId());
#endif

  _ftime(&el_time);

  time_now = ((el_time.time - start_sec) * 1000) + el_time.millitm;

  return time_now;
}
```

tpcc.h

```
//      File:           TPCC.H
//                                      Microsoft TPC-C Kit Ver.
4.30
//                                      Copyright Microsoft,
1996, 1997, 1998, 1999, 2000
//      Purpose:    Header file for TPC-C database loader


// Build number of TPC Benchmark Kit
#define TPCKIT_VER      "4.30"

// General headers
#include <windows.h>
#include <winbase.h>
#include <stdlib.h>
#include <stdio.h>
#include <process.h>
#include <stddef.h>
#include <stdarg.h>
#include <string.h>
#include <time.h>
#include <sys\timeb.h>
#include <sys\types.h>

// ODBC headers
#include <sql.h>
#include <sqlext.h>
#include <odbcss.h>

// General constants
#define MILLI           1000
#define FALSE                   0
#define TRUE                    1
#define UNDEF                           -1
#define MINPRINTASCII           32
#define MAXPRINTASCII           126

// Default environment constants
#define SERVER                  ""
```

```
#define DATABASE                                "tpcc"
#define USER                                    "sa"
#define PASSWORD                                ""

// Default loader arguments
#define BATCH                                   10000
#define DEFLDPACKSIZE                           32768
#define LOADER_RES_FILE                         "logs\\load.out"
#define LOADER_NURAND_C                         123
#define DEF_STARTING_WAREHOUSE                  1
#define BUILD_INDEX
1       // build both data and indexes
#define INDEX_ORDER
1       // build indexes before load
#define SCALE_DOWN
0   // build a normal scale database
#define INDEX_SCRIPT_PATH"scripts"

typedef struct
{
   char                                    *server;
   char                                    *database;
   char                                    *user;
   char                                    *password;
        BOOL                                    tables_all;
        // set if loading all tables
        BOOL                                    table_item;
                // set if loading ITEM table specifically
        BOOL
table_warehouse;    // set if loading WAREHOUSE, DISTRICT, and
STOCK
        BOOL
table_customer;             // set if loading CUSTOMER and
HISTORY
        BOOL                                    table_orders;
        // set if loading NEW-ORDER, ORDERS, ORDER-LINE
   long                                    num_warehouses;
   long                                    batch;
   long                                    verbose;
        long                                    pack_size;
        char
*loader_res_file;
        char
*synch_servername;
        long
case_sensitivity;
        long
starting_warehouse;
        long                                    build_index;
        long                                    index_order;
        long                                    scale_down;
        char
*index_script_path;
} TPCCLDR_ARGS;

// String length constants
        #define SERVER_NAME_LEN         20
        #define DATABASE_NAME_LEN       20
        #define USER_NAME_LEN           20
        #define PASSWORD_LEN            20
        #define TABLE_NAME_LEN          20
        #define I_DATA_LEN              50
        #define I_NAME_LEN              24
        #define BRAND_LEN               1
        #define LAST_NAME_LEN           16
        #define W_NAME_LEN              10
        #define ADDRESS_LEN             20
        #define STATE_LEN               2
        #define ZIP_LEN                 9
        #define S_DIST_LEN              24
        #define S_DATA_LEN              50
        #define D_NAME_LEN              10
        #define FIRST_NAME_LEN          16
        #define MIDDLE_NAME_LEN         2
        #define PHONE_LEN               16
        #define CREDIT_LEN              2
        #define C_DATA_LEN              500
        #define H_DATA_LEN              24
        #define DIST_INFO_LEN           24
        #define MAX_OL_NEW_ORDER_ITEMS  15
        #define MAX_OL_ORDER_STATUS_ITEMS 15
        #define STATUS_LEN              25
        #define OL_DIST_INFO_LEN        24
        #define C_SINCE_LEN
 23
        #define H_DATE_LEN
 23
        #define OL_DELIVERY_D_LEN       23
        #define O_ENTRY_D_LEN           23


// Functions in random.c
void    seed();
long    irand();
double  drand();
void    WUCreate();
short   WURand();
long    RandomNumber(long lower, long upper);

// Functions in getargs.c;
void    GetArgsLoader();
void    GetArgsLoaderUsage();

// Functions in time.c
long    TimeNow();

// Functions in strings.c
void    MakeAddress();
void    LastName();
int     MakeAlphaString();
int     MakeOriginalAlphaString();
int     MakeNumberString();
int     MakeZipNumberString();
void    InitString();
void    InitAddress();
void    PaddString();
```

tpccldr.c

```
//      File:           TPCCLDR.C
//                              Microsoft TPC-C Kit Ver.
4.30
//                              Copyright Microsoft,
1996, 1997, 1998, 1999, 2000
//      Purpose:  Source file for TPC-C database loader


// Includes
#include "tpcc.h"
#include "search.h"

// Defines
#define MAXITEMS            100000
#define MAXITEMS_SCALE_DOWN         100
#define CUSTOMERS_PER_DISTRICT 3000
```

```
#define CUSTOMERS_SCALE_DOWN     30
#define DISTRICT_PER_WAREHOUSE 10
#define ORDERS_PER_DISTRICT     3000
#define ORDERS_SCALE_DOWN       30
#define MAX_CUSTOMER_THREADS    2
#define MAX_ORDER_THREADS       3
#define MAX_MAIN_THREADS        4

// Functions declarations

void HandleErrorDBC (SQLHDBC  hdbc1);

void CheckSQL();
void CheckDataBase();

long NURand();
void LoadItem();
void LoadWarehouse();

void Stock();
void District();

void LoadCustomer();
void CustomerBufInit();
void CustomerBufLoad();
void LoadCustomerTable();
void LoadHistoryTable();

void LoadOrders();
void OrdersBufInit();
void OrdersBufLoad();
void LoadOrdersTable();
void LoadNewOrderTable();
void LoadOrderLineTable();
void GetPermutation();
void CheckForCommit();
void OpenConnections();
void BuildIndex();
void FormatDate ();

// Shared memory structures

typedef struct
{
   long             ol;
   long             ol_i_id;
   long             ol_supply_w_id;
   short            ol_quantity;
   double             ol_amount;
   char             ol_dist_info[DIST_INFO_LEN+1];
            char
ol_delivery_d[OL_DELIVERY_D_LEN+1];
} ORDER_LINE_STRUCT;

typedef struct
{
   long             o_id;
   short            o_d_id;
   long             o_w_id;
   long             o_c_id;
   short            o_carrier_id;
   short            o_ol_cnt;
   short            o_all_local;
            ORDER_LINE_STRUCT   o_ol[15];
} ORDERS_STRUCT;

typedef struct
{
   long                                    c_id;
   short                                   c_d_id;
   long                                    c_w_id;
            char
c_first[FIRST_NAME_LEN+1];
   char
c_middle[MIDDLE_NAME_LEN+1];
   char
c_last[LAST_NAME_LEN+1];
   char
c_street_1[ADDRESS_LEN+1];
   char
c_street_2[ADDRESS_LEN+1];
   char
c_city[ADDRESS_LEN+1];
   char                                    c_state[STATE_LEN+1];
   char                                    c_zip[ZIP_LEN+1];
   char
c_phone[PHONE_LEN+1];
   char
c_credit[CREDIT_LEN+1];
   double                                  c_credit_lim;
   double                                  c_discount;
//  fix to avoid ODBC float to numeric conversion problem.
//  double                                  c_balance;
            char                                    c_balance[6];

   double                                  c_ytd_payment;
            short
c_payment_cnt;
            short                                   c_delivery_cnt;
            char
c_data[C_DATA_LEN+1];
            double                                  h_amount;
   char
h_data[H_DATA_LEN+1];
} CUSTOMER_STRUCT;

typedef struct
{
            char
c_last[LAST_NAME_LEN+1];
            char
c_first[FIRST_NAME_LEN+1];
   long                                    c_id;
} CUSTOMER_SORT_STRUCT;

typedef struct
{
   long             time_start;
} LOADER_TIME_STRUCT;


// Global variables

char        szLastError[300];

HENV        henv;

HDBC        v_hdbc;
// for SQL Server version verification
HDBC        i_hdbc1;                                        //
for ITEM table
HDBC        w_hdbc1;                                        //
for WAREHOUSE, DISTRICT, STOCK
HDBC        c_hdbc1;                                        //
for CUSTOMER
```

```
HDBC      c_hdbc2;                                              //
for HISTORY
HDBC      o_hdbc1;                                              //
for ORDERS
HDBC      o_hdbc2;                                              //
for NEW-ORDER
HDBC      o_hdbc3;                                              //
for ORDER-LINE

HSTMT     v_hstmt;                                              //
for SQL Server version verification
HSTMT     i_hstmt1;
HSTMT     w_hstmt1;
HSTMT     c_hstmt1, c_hstmt2;
HSTMT     o_hstmt1, o_hstmt2, o_hstmt3;

ORDERS_STRUCT   orders_buf[ORDERS_PER_DISTRICT];
CUSTOMER_STRUCT
customer_buf[CUSTOMERS_PER_DISTRICT];
long          orders_rows_loaded;
long          new_order_rows_loaded;
long          order_line_rows_loaded;
long          history_rows_loaded;
long          customer_rows_loaded;
long          stock_rows_loaded;
long          district_rows_loaded;
long          item_rows_loaded;
long          warehouse_rows_loaded;
long          main_time_start;
long          main_time_end;
long                                max_items;
long                                customers_per_district;
long                                orders_per_district;
long                                first_new_order;
long                                last_new_order;

TPCCLDR_ARGS    *aptr, args;

// support for log directory determined by environment
#define                             LOGBASE_MAXLEN
128
int                                       UseAltLogDir = 0;
char                                LogBase[LOGBASE_MAXLEN];
char                                LogFile[2*LOGBASE_MAXLEN];
#define                             LOGFILE_CREATE(name)
\
                                          strcpy(LogFile, LogBase);
\
                                          strcat(LogFile, name);


//================================================
======================
//
// Function name: main
//
//================================================
======================

int main(int  argc, char **argv)
{

            DWORD         dwThreadID[MAX_MAIN_THREADS];
            HANDLE        hThread[MAX_MAIN_THREADS];
            FILE          *fLoader;
            char          buffer[255];
            int                                       i;

            for (i=0; i<MAX_MAIN_THREADS; i++)
                        hThread[i] = NULL;


printf("\n*************************************************
*");
            printf("\n*                                     *");
            printf("\n*  Microsoft SQL Server                     *");
            printf("\n*                                     *");
            printf("\n*  TPC-C BENCHMARK KIT:  Database loader
    *");
            printf("\n*  Version %s                          *",
TPCKIT_VER);
            printf("\n*                                     *");

printf("\n*************************************************
*\n\n");

   // process command line arguments

   aptr = &args;
   GetArgsLoader(argc, argv, aptr);

            // process environment variables
            if ( GetEnvironmentVariable("LOGBASE", LogBase,
LOGBASE_MAXLEN))
            {
                        UseAltLogDir = 1;
                        strcat(LogBase, "\\logs");
                        printf("Will use %s for log files\n", LogBase);
            }
            else
                        strcpy(LogBase, "logs");

            // verify database and tables exist before attempting to load

            CheckDataBase();

            printf("Build interface is ODBC.\n");

            if (aptr->build_index == 0)
                        printf("Data load only - no index creation.\n");
            else
                        printf("Data load and index creation.\n");

            if (aptr->index_order == 0)
                        printf("Clustered indexes will be created after
bulk load.\n");
            else
                        printf("Clustered indexes will be created before
bulk load.\n");

            // set database scale values
            if (aptr->scale_down == 1)
            {
                        printf("*** Scaled Down Database ***\n");
                        max_items = MAXITEMS_SCALE_DOWN;
                        customers_per_district =
CUSTOMERS_SCALE_DOWN;
                        orders_per_district =
ORDERS_SCALE_DOWN;
                        first_new_order = 0;
                        last_new_order  = 30;
            }
            else
            {
                        max_items = MAXITEMS;
```

```
                customers_per_district =
CUSTOMERS_PER_DISTRICT;
                orders_per_district =
ORDERS_PER_DISTRICT;
                first_new_order = 2100;
                last_new_order  = 3000;
        }


        // open connections to SQL Server

        OpenConnections();

        // open file for loader results
   fLoader = fopen(aptr->loader_res_file, "w");

   if (fLoader == NULL)
        {
                printf("Error, loader result file open failed.");
                exit(-1);
        }

   // start loading data

   sprintf(buffer,"TPC-C load started for %ld
warehouses.\n",aptr->num_warehouses);

        printf("%s",buffer);
        fprintf(fLoader,"%s",buffer);

        main_time_start = (TimeNow() / MILLI);

        // start parallel load threads


        if (aptr->tables_all || aptr->table_item)
        {
                fprintf(fLoader, "\nStarting loader threads for:
item\n");

                hThread[0] = CreateThread(NULL,

         0,

         (LPTHREAD_START_ROUTINE)LoadItem,

         NULL,

         0,

         &dwThreadID[0]);

                if (hThread[0] == NULL)
                {
                        printf("Error, failed in creating
creating thread = 0.\n");
                        exit(-1);
                }
        }

        if (aptr->tables_all || aptr->table_warehouse)
        {
                fprintf(fLoader, "Starting loader threads for:
warehouse\n");

                hThread[1] = CreateThread(NULL,

         0,

         (LPTHREAD_START_ROUTINE)LoadWarehouse,

         NULL,

         0,

         &dwThreadID[1]);

                if (hThread[1] == NULL)
                {
                        printf("Error, failed in creating
creating thread = 1.\n");
                        exit(-1);
                }
        }

        if (aptr->tables_all || aptr->table_customer)
        {
                fprintf(fLoader, "Starting loader threads for:
customer\n");

                hThread[2] = CreateThread(NULL,

         0,

         (LPTHREAD_START_ROUTINE)LoadCustomer,

         NULL,

         0,

         &dwThreadID[2]);

                if (hThread[2] == NULL)
                {
                        printf("Error, failed in creating
creating main thread = 2.\n");
                        exit(-1);
                }
        }

        if (aptr->tables_all || aptr->table_orders)
        {
                fprintf(fLoader, "Starting loader threads for:
orders\n");

                hThread[3] = CreateThread(NULL,

         0,

         (LPTHREAD_START_ROUTINE)LoadOrders,

         NULL,

         0,

         &dwThreadID[3]);

                if (hThread[3] == NULL)
                {
                        printf("Error, failed in creating
creating main thread = 3.\n");
                        exit(-1);
                }
        }

        // Wait for threads to finish...
```

```
        for (i=0; i<MAX_MAIN_THREADS; i++)
        {
                if (hThread[i] != NULL)
                {
                        WaitForSingleObject( hThread[i],
INFINITE );
                        CloseHandle(hThread[i]);
                        hThread[i] = NULL;
                }
        }

        main_time_end = (TimeNow() / MILLI);

   sprintf(buffer,"\nTPC-C load completed successfully in %ld
minutes.\n",
                        (main_time_end -
main_time_start)/60);

        printf("%s",buffer);
        fprintf(fLoader, "%s", buffer);

        fclose(fLoader);

        SQLFreeEnv(henv);

   exit(0);

        return 0;
}


//================================================
=====================
//
// Function name: LoadItem
//
//================================================
=====================

void LoadItem()
{
   long         i_id;
        long            i_im_id;
   char         i_name[I_NAME_LEN+1];
   double       i_price;
   char         i_data[I_DATA_LEN+1];
        char            name[20];
        long            time_start;
        RETCODE                 rc;
        DBINT           rcint;
        char            bcphint[128];

        // Seed with unique number
        seed(1);

        printf("Loading item table...\n");

        // if build index before load
        if ((aptr->build_index == 1) && (aptr->index_order == 1))
                BuildIndex("idxitmcl");

        InitString(i_name, I_NAME_LEN+1);
        InitString(i_data, I_DATA_LEN+1);

        sprintf(name, "%s..%s", aptr->database, "t_item");

        LOGFILE_CREATE("\\item.err")
        rc = bcp_init(i_hdbc1, name, NULL, LogFile, DB_IN);
        if (rc != SUCCEED)
                HandleErrorDBC(i_hdbc1);

        if ((aptr->build_index == 1) && (aptr->index_order == 1))
        {
                sprintf(bcphint, "tablock, order (i_id),
ROWS_PER_BATCH = 100000, CHECK_CONSTRAINTS");
                rc = bcp_control(i_hdbc1, BCPHINTS, (void*)
bcphint);
                if (rc != SUCCEED)
                        HandleErrorDBC(i_hdbc1);
        }

        rc = bcp_bind(i_hdbc1, (BYTE *) &i_id, 0,
SQL_VARLEN_DATA, NULL, 0, SQLINT4, 1);
        if (rc != SUCCEED)
                HandleErrorDBC(i_hdbc1);

        rc = bcp_bind(i_hdbc1, (BYTE *) &i_im_id, 0,
SQL_VARLEN_DATA, NULL, 0, SQLINT4, 2);
        if (rc != SUCCEED)
                HandleErrorDBC(i_hdbc1);

        rc = bcp_bind(i_hdbc1, (BYTE *) i_name, 0,
I_NAME_LEN, NULL, 0, 0, 3);
        if (rc != SUCCEED)
                HandleErrorDBC(i_hdbc1);

        rc = bcp_bind(i_hdbc1, (BYTE *) &i_price, 0,
SQL_VARLEN_DATA, NULL, 0, SQLFLT8, 4);
        if (rc != SUCCEED)
                HandleErrorDBC(i_hdbc1);

        rc = bcp_bind(i_hdbc1, (BYTE *) i_data, 0, I_DATA_LEN,
NULL, 0, 0, 5);
        if (rc != SUCCEED)
                HandleErrorDBC(i_hdbc1);

        time_start = (TimeNow() / MILLI);

        item_rows_loaded = 0;

        for (i_id = 1; i_id <= max_items; i_id++)
        {
                i_im_id = RandomNumber(1L, 10000L);

                MakeAlphaString(14, 24, I_NAME_LEN,
i_name);

                i_price = ((float) RandomNumber(100L,
10000L))/100.0;

                MakeOriginalAlphaString(26, 50,
I_DATA_LEN, i_data, 10);

                rc = bcp_sendrow(i_hdbc1);
                if (rc != SUCCEED)
                        HandleErrorDBC(i_hdbc1);

                item_rows_loaded++;
                CheckForCommit(i_hdbc1, i_hstmt1,
item_rows_loaded, "item", &time_start);
        }

        rcint = bcp_done(i_hdbc1);
        if (rcint < 0)
                HandleErrorDBC(i_hdbc1);
```

```
        printf("Finished loading item table.\n");

        SQLFreeStmt(i_hstmt1, SQL_DROP);
        SQLDisconnect(i_hdbc1);
        SQLFreeConnect(i_hdbc1);

        // if build index after load
        if ((aptr->build_index == 1) && (aptr->index_order == 0))
                BuildIndex("idxitmcl");

}


//================================================
============================
//
// Function   : LoadWarehouse
//
// Loads WAREHOUSE table and loads Stock and District as
Warehouses are created
//
//================================================
============================

void LoadWarehouse()
{
   long     w_id;
   char     w_name[W_NAME_LEN+1];
   char     w_street_1[ADDRESS_LEN+1];
   char     w_street_2[ADDRESS_LEN+1];
   char     w_city[ADDRESS_LEN+1];
   char     w_state[STATE_LEN+1];
   char     w_zip[ZIP_LEN+1];
   double   w_tax;
   double   w_ytd;
        char        name[20];
        long        time_start;
        RETCODE             rc;
        DBINT    rcint;
        char        bcphint[128];


        // Seed with unique number
        seed(aptr->starting_warehouse + 1);

        printf("Loading warehouse table...\n");

        // if build index before load...
        if ((aptr->build_index == 1) && (aptr->index_order == 1))
                BuildIndex("idxwarcl");

        InitString(w_name, W_NAME_LEN+1);
        InitAddress(w_street_1, w_street_2, w_city, w_state,
w_zip);

        sprintf(name, "%s..%s", aptr->database, "t_warehouse");

        LOGFILE_CREATE("\\whouse.err")
        rc = bcp_init(w_hdbc1, name, NULL, LogFile, DB_IN);

        if (rc != SUCCEED)
                HandleErrorDBC(w_hdbc1);

        if ((aptr->build_index == 1) && (aptr->index_order == 1))
        {
                sprintf(bcphint, "tablock, order (w_id),
ROWS_PER_BATCH = %d, CHECK_CONSTRAINTS",
aptr->num_warehouses);
                rc = bcp_control(w_hdbc1, BCPHINTS, (void*)
bcphint);
                if (rc != SUCCEED)
                        HandleErrorDBC(w_hdbc1);
        }

        rc = bcp_bind(w_hdbc1, (BYTE *) &w_id, 0,
SQL_VARLEN_DATA, NULL, 0, SQLINT4, 1);
        if (rc != SUCCEED)
                HandleErrorDBC(w_hdbc1);

        rc = bcp_bind(w_hdbc1, (BYTE *) w_name, 0,
W_NAME_LEN, NULL, 0, 0, 2);
        if (rc != SUCCEED)
                HandleErrorDBC(w_hdbc1);

        rc = bcp_bind(w_hdbc1, (BYTE *) w_street_1, 0,
ADDRESS_LEN, NULL, 0, 0, 3);
        if (rc != SUCCEED)
                HandleErrorDBC(w_hdbc1);

        rc = bcp_bind(w_hdbc1, (BYTE *) w_street_2, 0,
ADDRESS_LEN, NULL, 0, 0, 4);
        if (rc != SUCCEED)
                HandleErrorDBC(w_hdbc1);

        rc = bcp_bind(w_hdbc1, (BYTE *) w_city, 0,
ADDRESS_LEN, NULL, 0, 0, 5);
        if (rc != SUCCEED)
                HandleErrorDBC(w_hdbc1);

        rc = bcp_bind(w_hdbc1, (BYTE *) w_state, 0,
STATE_LEN, NULL, 0, 0, 6);
        if (rc != SUCCEED)
                HandleErrorDBC(w_hdbc1);

        rc = bcp_bind(w_hdbc1, (BYTE *) w_zip, 0, ZIP_LEN,
NULL, 0, 0, 7);
        if (rc != SUCCEED)
                HandleErrorDBC(w_hdbc1);

        rc = bcp_bind(w_hdbc1, (BYTE *) &w_tax, 0,
SQL_VARLEN_DATA, NULL, 0, SQLFLT8, 8);
        if (rc != SUCCEED)
                HandleErrorDBC(w_hdbc1);

        rc = bcp_bind(w_hdbc1, (BYTE *) &w_ytd, 0,
SQL_VARLEN_DATA, NULL, 0, SQLFLT8, 9);
        if (rc != SUCCEED)
                HandleErrorDBC(w_hdbc1);

        time_start = (TimeNow() / MILLI);

        warehouse_rows_loaded = 0;

        for (w_id = (long)aptr->starting_warehouse; w_id <=
aptr->num_warehouses; w_id++)
        {
                MakeAlphaString(6,10, W_NAME_LEN,
w_name);

                MakeAddress(w_street_1, w_street_2, w_city,
w_state, w_zip);
```

```
                        w_tax = ((float)
RandomNumber(0L,2000L))/10000.00;

                        w_ytd = 300000.00;

                        rc = bcp_sendrow(w_hdbc1);
                        if (rc != SUCCEED)
                                HandleErrorDBC(w_hdbc1);

                        warehouse_rows_loaded++;
                        CheckForCommit(w_hdbc1, i_hstmt1,
warehouse_rows_loaded, "warehouse", &time_start);
                }

                rcint = bcp_done(w_hdbc1);
                if (rcint < 0)
                        HandleErrorDBC(w_hdbc1);

                printf("Finished loading warehouse table.\n");

                // if build index after load...
                if ((aptr->build_index == 1) && (aptr->index_order == 0))
                        BuildIndex("idxwarcl");

                stock_rows_loaded = 0;
                district_rows_loaded = 0;

                District();
                Stock();

}


//================================================
=====================
//
// Function   : District
//
//================================================
=====================

void District()
{
   short     d_id;
   long      d_w_id;
   char      d_name[D_NAME_LEN+1];
   char      d_street_1[ADDRESS_LEN+1];
   char      d_street_2[ADDRESS_LEN+1];
   char      d_city[ADDRESS_LEN+1];
   char      d_state[STATE_LEN+1];
   char      d_zip[ZIP_LEN+1];
   double    d_tax;
   double    d_ytd;
             char          name[20];
   long      d_next_o_id;
             long          time_start;
             int                   w_id;
             RETCODE               rc;
             DBINT     rcint;
             char          bcphint[128];

             // Seed with unique number
             seed(aptr->starting_warehouse + 2);

             printf("Loading district table...\n");

             // build index before load
             if ((aptr->build_index == 1) && (aptr->index_order == 1))
                        BuildIndex("idxdiscl");

             InitString(d_name, D_NAME_LEN+1);
             InitAddress(d_street_1, d_street_2, d_city, d_state, d_zip);

             sprintf(name, "%s..%s", aptr->database, "t_district");

             LOGFILE_CREATE("\\district.err")
             rc = bcp_init(w_hdbc1, name, NULL, LogFile, DB_IN);

             if (rc != SUCCEED)
                        HandleErrorDBC(w_hdbc1);

             if ((aptr->build_index == 1) && (aptr->index_order == 1))
             {
                        sprintf(bcphint, "tablock, order (d_w_id, d_id),
ROWS_PER_BATCH = %u, CHECK_CONSTRAINTS",
(aptr->num_warehouses * 10));
                        rc = bcp_control(w_hdbc1, BCPHINTS, (void*)
bcphint);
                        if (rc != SUCCEED)
                                   HandleErrorDBC(w_hdbc1);
             }

             rc = bcp_bind(w_hdbc1, (BYTE *) &d_id, 0,
SQL_VARLEN_DATA, NULL, 0, SQLINT2, 1);
             if (rc != SUCCEED)
                        HandleErrorDBC(w_hdbc1);

             rc = bcp_bind(w_hdbc1, (BYTE *) &d_w_id, 0,
SQL_VARLEN_DATA, NULL, 0, SQLINT4, 2);
             if (rc != SUCCEED)
                        HandleErrorDBC(w_hdbc1);

             rc = bcp_bind(w_hdbc1, (BYTE *) d_name, 0,
D_NAME_LEN, NULL, 0, 0, 3);
             if (rc != SUCCEED)
                        HandleErrorDBC(w_hdbc1);

             rc = bcp_bind(w_hdbc1, (BYTE *) d_street_1, 0,
ADDRESS_LEN, NULL, 0, 0, 4);
             if (rc != SUCCEED)
                        HandleErrorDBC(w_hdbc1);

             rc = bcp_bind(w_hdbc1, (BYTE *) d_street_2, 0,
ADDRESS_LEN, NULL, 0, 0, 5);
             if (rc != SUCCEED)
                        HandleErrorDBC(w_hdbc1);

             rc = bcp_bind(w_hdbc1, (BYTE *) d_city, 0,
ADDRESS_LEN, NULL, 0, 0, 6);
             if (rc != SUCCEED)
                        HandleErrorDBC(w_hdbc1);

             rc = bcp_bind(w_hdbc1, (BYTE *) d_state, 0,
STATE_LEN, NULL, 0, 0, 7);
             if (rc != SUCCEED)
                        HandleErrorDBC(w_hdbc1);

             rc = bcp_bind(w_hdbc1, (BYTE *) d_zip, 0, ZIP_LEN,
NULL, 0, 0, 8);
             if (rc != SUCCEED)
                        HandleErrorDBC(w_hdbc1);

             rc = bcp_bind(w_hdbc1, (BYTE *) &d_tax, 0,
SQL_VARLEN_DATA, NULL, 0, SQLFLT8, 9);
             if (rc != SUCCEED)
                        HandleErrorDBC(w_hdbc1);
```

```
        rc = bcp_bind(w_hdbc1, (BYTE *) &d_ytd, 0,
SQL_VARLEN_DATA, NULL, 0, SQLFLT8, 10);
        if (rc != SUCCEED)
                HandleErrorDBC(w_hdbc1);

        rc = bcp_bind(w_hdbc1, (BYTE *) &d_next_o_id, 0,
SQL_VARLEN_DATA, NULL, 0, SQLINT4, 11);
        if (rc != SUCCEED)
                HandleErrorDBC(w_hdbc1);

        d_ytd  = 30000.0;

        d_next_o_id = orders_per_district+1;

        time_start = (TimeNow() / MILLI);

        for (w_id = aptr->starting_warehouse; w_id <=
aptr->num_warehouses; w_id++)
        {
                d_w_id = w_id;

                for (d_id = 1; d_id <=
DISTRICT_PER_WAREHOUSE; d_id++)
                {

MakeAlphaString(6,10,D_NAME_LEN, d_name);

                        MakeAddress(d_street_1, d_street_2,
d_city, d_state, d_zip);

                        d_tax = ((float)
RandomNumber(0L,2000L))/10000.00;

                        rc = bcp_sendrow(w_hdbc1);
                        if (rc != SUCCEED)

HandleErrorDBC(w_hdbc1);

                        district_rows_loaded++;
                        CheckForCommit(w_hdbc1,
w_hstmt1, district_rows_loaded, "district", &time_start);
                }
   }

        rcint = bcp_done(w_hdbc1);
        if (rcint < 0)
                HandleErrorDBC(w_hdbc1);

        printf("Finished loading district table.\n");

        // if build index after load...
        if ((aptr->build_index == 1) && (aptr->index_order == 0))
                BuildIndex("idxdiscl");

   return;
}


//==============================================
====================
//
// Function   : Stock
//
//==============================================
====================

void Stock()
{
   long     s_i_id;
   long     s_w_id;
   short    s_quantity;
   char     s_dist_01[S_DIST_LEN+1];
   char     s_dist_02[S_DIST_LEN+1];
   char     s_dist_03[S_DIST_LEN+1];
   char     s_dist_04[S_DIST_LEN+1];
   char     s_dist_05[S_DIST_LEN+1];
   char     s_dist_06[S_DIST_LEN+1];
   char     s_dist_07[S_DIST_LEN+1];
   char     s_dist_08[S_DIST_LEN+1];
   char     s_dist_09[S_DIST_LEN+1];
   char     s_dist_10[S_DIST_LEN+1];
   long     s_ytd;
   short    s_order_cnt;
   short    s_remote_cnt;
   char     s_data[S_DATA_LEN+1];
   short    len;
        char        name[20];
        long        time_start;
        RETCODE             rc;
        DBINT       rcint;
        char        bcphint[128];

        // Seed with unique number
        seed(aptr->starting_warehouse + 3);

        // if build index before load...
        if ((aptr->build_index == 1) && (aptr->index_order == 1))
                BuildIndex("idxstkcl");

        sprintf(name, "%s..%s", aptr->database, "t_stock");

        LOGFILE_CREATE("\\stock.err")
        rc = bcp_init(w_hdbc1, name, NULL, LogFile, DB_IN);
        if (rc != SUCCEED)
                HandleErrorDBC(w_hdbc1);

        if ((aptr->build_index == 1) && (aptr->index_order == 1))
        {
                sprintf(bcphint, "tablock, order (s_i_id, s_w_id),
ROWS_PER_BATCH = %u, CHECK_CONSTRAINTS",
(aptr->num_warehouses * 100000));
                rc = bcp_control(w_hdbc1, BCPHINTS, (void*)
bcphint);
                if (rc != SUCCEED)
                        HandleErrorDBC(w_hdbc1);
        }

        rc = bcp_bind(w_hdbc1, (BYTE *) &s_i_id, 0,
SQL_VARLEN_DATA, NULL, 0, SQLINT4, 1);
        if (rc != SUCCEED)
                HandleErrorDBC(w_hdbc1);

        bcp_bind(w_hdbc1, (BYTE *) &s_w_id, 0,
SQL_VARLEN_DATA, NULL, 0, SQLINT4, 2);
        if (rc != SUCCEED)
                HandleErrorDBC(w_hdbc1);

        rc = bcp_bind(w_hdbc1, (BYTE *) &s_quantity, 0,
SQL_VARLEN_DATA, NULL, 0, SQLINT2, 3);
        if (rc != SUCCEED)
                HandleErrorDBC(w_hdbc1);

        rc = bcp_bind(w_hdbc1, (BYTE *) s_dist_01, 0,
S_DIST_LEN, NULL, 0, 0, 4);
        if (rc != SUCCEED)
```

```
                HandleErrorDBC(w_hdbc1);

        rc = bcp_bind(w_hdbc1, (BYTE *) s_dist_02, 0,
S_DIST_LEN, NULL, 0, 0, 5);
        if (rc != SUCCEED)
                HandleErrorDBC(w_hdbc1);

        rc = bcp_bind(w_hdbc1, (BYTE *) s_dist_03, 0,
S_DIST_LEN, NULL, 0, 0, 6);
        if (rc != SUCCEED)
                HandleErrorDBC(w_hdbc1);

        rc = bcp_bind(w_hdbc1, (BYTE *) s_dist_04, 0,
S_DIST_LEN, NULL, 0, 0, 7);
        if (rc != SUCCEED)
                HandleErrorDBC(w_hdbc1);

        rc = bcp_bind(w_hdbc1, (BYTE *) s_dist_05, 0,
S_DIST_LEN, NULL, 0, 0, 8);
        if (rc != SUCCEED)
                HandleErrorDBC(w_hdbc1);

        rc = bcp_bind(w_hdbc1, (BYTE *) s_dist_06, 0,
S_DIST_LEN, NULL, 0, 0, 9);
        if (rc != SUCCEED)
                HandleErrorDBC(w_hdbc1);

        rc = bcp_bind(w_hdbc1, (BYTE *) s_dist_07, 0,
S_DIST_LEN, NULL, 0, 0, 10);
        if (rc != SUCCEED)
                HandleErrorDBC(w_hdbc1);

        rc = bcp_bind(w_hdbc1, (BYTE *) s_dist_08, 0,
S_DIST_LEN, NULL, 0, 0, 11);
        if (rc != SUCCEED)
                HandleErrorDBC(w_hdbc1);

        rc = bcp_bind(w_hdbc1, (BYTE *) s_dist_09, 0,
S_DIST_LEN, NULL, 0, 0, 12);
        if (rc != SUCCEED)
                HandleErrorDBC(w_hdbc1);

        rc = bcp_bind(w_hdbc1, (BYTE *) s_dist_10, 0,
S_DIST_LEN, NULL, 0, 0, 13);
        if (rc != SUCCEED)
                HandleErrorDBC(w_hdbc1);

        rc = bcp_bind(w_hdbc1, (BYTE *) &s_ytd, 0,
SQL_VARLEN_DATA, NULL, 0, SQLINT4, 14);
        if (rc != SUCCEED)
                HandleErrorDBC(w_hdbc1);

        rc = bcp_bind(w_hdbc1, (BYTE *) &s_order_cnt, 0,
SQL_VARLEN_DATA, NULL, 0, SQLINT2, 15);
        if (rc != SUCCEED)
                HandleErrorDBC(w_hdbc1);

        rc = bcp_bind(w_hdbc1, (BYTE *) &s_remote_cnt, 0,
SQL_VARLEN_DATA, NULL, 0, SQLINT2, 16);
        if (rc != SUCCEED)
                HandleErrorDBC(w_hdbc1);

        rc = bcp_bind(w_hdbc1, (BYTE *) s_data, 0,
S_DATA_LEN, NULL, 0, 0, 17);
        if (rc != SUCCEED)
                HandleErrorDBC(w_hdbc1);

        s_ytd = s_order_cnt = s_remote_cnt = 0;

        time_start = (TimeNow() / MILLI);

        printf("...Loading stock table\n");

        for (s_i_id=1; s_i_id <= max_items; s_i_id++)
        {

                for (s_w_id = (long)aptr->starting_warehouse;
s_w_id <= aptr->num_warehouses; s_w_id++)
                {

                        s_quantity =
(short)RandomNumber(10L,100L);
                        len =
MakeAlphaString(24,24,S_DIST_LEN, s_dist_01);
                        len =
MakeAlphaString(24,24,S_DIST_LEN, s_dist_02);
                        len =
MakeAlphaString(24,24,S_DIST_LEN, s_dist_03);
                        len =
MakeAlphaString(24,24,S_DIST_LEN, s_dist_04);
                        len =
MakeAlphaString(24,24,S_DIST_LEN, s_dist_05);
                        len =
MakeAlphaString(24,24,S_DIST_LEN, s_dist_06);
                        len =
MakeAlphaString(24,24,S_DIST_LEN, s_dist_07);
                        len =
MakeAlphaString(24,24,S_DIST_LEN, s_dist_08);
                        len =
MakeAlphaString(24,24,S_DIST_LEN, s_dist_09);
                        len =
MakeAlphaString(24,24,S_DIST_LEN, s_dist_10);

                        len =
MakeOriginalAlphaString(26,50, S_DATA_LEN, s_data,10);

                        rc = bcp_sendrow(w_hdbc1);
                        if (rc != SUCCEED)

HandleErrorDBC(w_hdbc1);

                        stock_rows_loaded++;
                        CheckForCommit(w_hdbc1,
w_hstmt1, stock_rows_loaded, "stock", &time_start);

                }
        }

        rcint = bcp_done(w_hdbc1);
        if (rcint < 0)
                HandleErrorDBC(w_hdbc1);

        printf("Finished loading stock table.\n");

        SQLFreeStmt(w_hstmt1, SQL_DROP);
        SQLDisconnect(w_hdbc1);
        SQLFreeConnect(w_hdbc1);

        // if build index after load...
        if ((aptr->build_index == 1) && (aptr->index_order == 0))
                BuildIndex("idxstkcl");

        return;
}
```

```
//================================================================
//
// Function   : LoadCustomer
//
//================================================================

void LoadCustomer()
{
        LOADER_TIME_STRUCT     customer_time_start;
        LOADER_TIME_STRUCT     history_time_start;
        long                   w_id;
  short         d_id;
        DWORD
dwThreadID[MAX_CUSTOMER_THREADS];
        HANDLE
hThread[MAX_CUSTOMER_THREADS];
        char                   name[20];
        RETCODE
rc;
        DBINT
rcint;
        char
bcphint[128];
        char
cmd[256];
        // SQLRETURN
rc_1;
        // SQLSMALLINT
recnum, MsgLen;
        // SQLCHAR
SqlState[6], Msg[SQL_MAX_MESSAGE_LENGTH];
        // SQLINTEGER
NativeError;

        // Seed with unique number
        seed(aptr->starting_warehouse + 4);

        printf("Loading customer and history tables...\n");

        // if build index before load...
        if ((aptr->build_index == 1) && (aptr->index_order == 1))
                BuildIndex("idxcuscl");

        // Initialize bulk copy
        sprintf(name, "%s..%s", aptr->database, "t_customer");

        LOGFILE_CREATE("\\customer.err")
        rc = bcp_init(c_hdbc1, name, NULL, LogFile, DB_IN);
        if (rc != SUCCEED)
                HandleErrorDBC(c_hdbc1);

        if ((aptr->build_index == 1) && (aptr->index_order == 1))
        {
                sprintf(bcphint, "tablock, order (c_w_id, c_d_id,
c_id), ROWS_PER_BATCH = %u, CHECK_CONSTRAINTS",
(aptr->num_warehouses * 30000));
                rc = bcp_control(c_hdbc1, BCPHINTS, (void*)
bcphint);
                if (rc != SUCCEED)
                        HandleErrorDBC(c_hdbc1);
        }

        sprintf(name, "%s..%s", aptr->database, "t_history");

        LOGFILE_CREATE("\\history.err")
        rc = bcp_init(c_hdbc2, name, NULL, LogFile, DB_IN);
        if (rc != SUCCEED)
                HandleErrorDBC(c_hdbc2);

        sprintf(bcphint, "tablock, order (h_w_id, h_d_id, h_c_id,
h_date), ROWS_PER_BATCH = %u, CHECK_CONSTRAINTS",
(aptr->num_warehouses * 30000));
        rc = bcp_control(c_hdbc2, BCPHINTS, (void*) bcphint);
        if (rc != SUCCEED)
                HandleErrorDBC(c_hdbc2);

        customer_rows_loaded    = 0;
        history_rows_loaded     = 0;

        CustomerBufInit();

        customer_time_start.time_start = (TimeNow() / MILLI);
        history_time_start.time_start = (TimeNow() / MILLI);

        for (w_id = (long)aptr->starting_warehouse; w_id <=
aptr->num_warehouses; w_id++)
        {
                for (d_id = 1; d_id <=
DISTRICT_PER_WAREHOUSE; d_id++)
                {

                        CustomerBufLoad(d_id, w_id);


                        // Start parallel loading threads here...

                        // Start customer table thread

                        printf("...Loading customer table for:
d_id = %d, w_id = %d\n", d_id, w_id);

                        hThread[0] = CreateThread(NULL,

                0,

                (LPTHREAD_START_ROUTINE)
LoadCustomerTable,

                &customer_time_start,

                0,

                &dwThreadID[0]);

                        if (hThread[0] == NULL)
                        {
                                printf("Error, failed in
creating creating thread = 0.\n");
                                exit(-1);
                        }

                        // Start History table thread

                        printf("...Loading history table for:
d_id = %d, w_id = %d\n", d_id, w_id);

                        hThread[1] = CreateThread(NULL,

                0,

                (LPTHREAD_START_ROUTINE)
LoadHistoryTable,

                &history_time_start,
```

```
                        0,

                        &dwThreadID[1]);

                                if (hThread[1] == NULL)
                                {
                                        printf("Error, failed in
creating creating thread = 1.\n");
                                        exit(-1);
                                }

                                WaitForSingleObject( hThread[0],
INFINITE );
                                WaitForSingleObject( hThread[1],
INFINITE );

                                if (CloseHandle(hThread[0]) ==
FALSE)
                                {
                                        printf("Error, failed in
closing customer thread handle with errno: %d\n", GetLastError());
                                }

                                if (CloseHandle(hThread[1]) ==
FALSE)
                                {
                                        printf("Error, failed in
closing history thread handle with errno: %d\n", GetLastError());
                                }



                        }

        }

        // flush the bulk connection
        rcint = bcp_done(c_hdbc1);
        if (rcint < 0)
                HandleErrorDBC(c_hdbc1);

        rcint = bcp_done(c_hdbc2);
        if (rcint < 0)
                HandleErrorDBC(c_hdbc2);

        printf("Finished loading customer table.\n");

        // if build index after load...
        if ((aptr->build_index == 1) && (aptr->index_order == 0))
                BuildIndex("idxcuscl");

        // build non-clustered index
        if (aptr->build_index == 1)
                BuildIndex("idxcusnc");

        // Output the NURAND used for the loader into C_FIRST
for C_ID = 1,
        // C_W_ID = 1, and C_D_ID = 1
        sprintf(cmd, "isql -S%s -U%s -P%s -d%s -e -Q\"update
t_customer set c_first = 'C_LOAD = %d' where c_id = 1 and c_w_id =
1 and c_d_id = 1\" > %s\\nurand_load.log",
                                        aptr->server,
                                        aptr->user,
                                        aptr->password,
                                        aptr->database,
                                        LOADER_NURAND_C,
                                        LogBase);
        system(cmd);

        SQLFreeStmt(c_hstmt1, SQL_DROP);
        SQLDisconnect(c_hdbc1);
        SQLFreeConnect(c_hdbc1);

        SQLFreeStmt(c_hstmt2, SQL_DROP);
        SQLDisconnect(c_hdbc2);
        SQLFreeConnect(c_hdbc2);


  return;

}


//================================================
======================
//
// Function   : CustomerBufInit
//
//================================================
======================

void CustomerBufInit()
{
        int     i;

        for (i=0;i<customers_per_district;i++)
        {
                customer_buf[i].c_id = 0;
                customer_buf[i].c_d_id = 0;
                customer_buf[i].c_w_id = 0;

                strcpy(customer_buf[i].c_first,"");
                strcpy(customer_buf[i].c_middle,"");
                strcpy(customer_buf[i].c_last,"");
                strcpy(customer_buf[i].c_street_1,"");
                strcpy(customer_buf[i].c_street_2,"");
                strcpy(customer_buf[i].c_city,"");
                strcpy(customer_buf[i].c_state,"");
                strcpy(customer_buf[i].c_zip,"");
                strcpy(customer_buf[i].c_phone,"");
                strcpy(customer_buf[i].c_credit,"");

                customer_buf[i].c_credit_lim = 0;
                customer_buf[i].c_discount = (float) 0;

                //  fix to avoid ODBC float to numeric
conversion problem.
                //              customer_buf[i].c_balance = 0;
                strcpy(customer_buf[i].c_balance,"");

                customer_buf[i].c_ytd_payment = 0;
                customer_buf[i].c_payment_cnt = 0;
                customer_buf[i].c_delivery_cnt = 0;

                strcpy(customer_buf[i].c_data,"");

                customer_buf[i].h_amount = 0;

                strcpy(customer_buf[i].h_data,"");

        }


}
```

```
//==============================================================
//
// Function   : CustomerBufLoad
//
// Fills shared buffer for HISTORY and CUSTOMER
//==============================================================

void CustomerBufLoad(int d_id, int w_id)
{
        long                                    i;
   CUSTOMER_SORT_STRUCT
c[CUSTOMERS_PER_DISTRICT];


        for (i=0;i<customers_per_district;i++)
        {
                if (i < 1000)
                        LastName(i, c[i].c_last);
                else

LastName(NURand(255,0,999,LOADER_NURAND_C), c[i].c_last);

                MakeAlphaString(8,16,FIRST_NAME_LEN,
c[i].c_first);

                c[i].c_id = i+1;

        }

        printf("...Loading customer buffer for: d_id = %d, w_id =
%d\n",
                        d_id, w_id);

        for (i=0;i<customers_per_district;i++)
        {

                customer_buf[i].c_d_id = d_id;
                customer_buf[i].c_w_id = w_id;
                customer_buf[i].h_amount = 10.0;

                customer_buf[i].c_ytd_payment  = 10.0;

                customer_buf[i].c_payment_cnt  = 1;
                customer_buf[i].c_delivery_cnt = 0;

                // Generate CUSTOMER and HISTORY data

                customer_buf[i].c_id = c[i].c_id;

                strcpy(customer_buf[i].c_first, c[i].c_first);
                strcpy(customer_buf[i].c_last, c[i].c_last);

                customer_buf[i].c_middle[0] = 'O';
                customer_buf[i].c_middle[1] = 'E';

                MakeAddress(customer_buf[i].c_street_1,

customer_buf[i].c_street_2,
                                        customer_buf[i].c_city,

customer_buf[i].c_state,
                                        customer_buf[i].c_zip);

                MakeNumberString(16, 16, PHONE_LEN,
customer_buf[i].c_phone);

                if (RandomNumber(1L, 100L) > 10)
                        customer_buf[i].c_credit[0] = 'G';
                else
                        customer_buf[i].c_credit[0] = 'B';
                customer_buf[i].c_credit[1] = 'C';

                customer_buf[i].c_credit_lim = 50000.0;
                customer_buf[i].c_discount = ((float)
RandomNumber(0L, 5000L)) / 10000.0;

                //  fix to avoid ODBC float to numeric
conversion problem.
                //  customer_buf[i].c_balance = -10.0;
                strcpy(customer_buf[i].c_balance,"-10.0");

                MakeAlphaString(300, 500, C_DATA_LEN,
customer_buf[i].c_data);

                // Generate HISTORY data
                MakeAlphaString(12, 24, H_DATA_LEN,
customer_buf[i].h_data);

        }
}

//==============================================================
//
// Function   : LoadCustomerTable
//
//==============================================================

void LoadCustomerTable(LOADER_TIME_STRUCT
*customer_time_start)
{
        int     i;
   long     c_id;
   short    c_d_id;
   long     c_w_id;
   char     c_first[FIRST_NAME_LEN+1];
   char     c_middle[MIDDLE_NAME_LEN+1];
   char     c_last[LAST_NAME_LEN+1];
   char     c_street_1[ADDRESS_LEN+1];
   char     c_street_2[ADDRESS_LEN+1];
   char     c_city[ADDRESS_LEN+1];
   char     c_state[STATE_LEN+1];
   char     c_zip[ZIP_LEN+1];
   char     c_phone[PHONE_LEN+1];
   char     c_credit[CREDIT_LEN+1];
   double    c_credit_lim;
   double    c_discount;

        //  fix to avoid ODBC float to numeric conversion problem.

        //  double          c_balance;
        char            c_balance[6];

   double    c_ytd_payment;
   short    c_payment_cnt;
   short    c_delivery_cnt;
   char     c_data[C_DATA_LEN+1];
        char            c_since[C_SINCE_LEN+1];
        RETCODE                 rc;

   rc = bcp_bind(c_hdbc1, (BYTE *) &c_id, 0,
SQL_VARLEN_DATA, NULL, 0, SQLINT4, 1);
```

```
            if (rc != SUCCEED)
                        HandleErrorDBC(c_hdbc1);

   rc = bcp_bind(c_hdbc1, (BYTE *) &c_d_id, 0,
SQL_VARLEN_DATA, NULL, 0, SQLINT2, 2);
            if (rc != SUCCEED)
                        HandleErrorDBC(c_hdbc1);

            rc = bcp_bind(c_hdbc1, (BYTE *) &c_w_id, 0,
SQL_VARLEN_DATA, NULL, 0, SQLINT4, 3);
            if (rc != SUCCEED)
                        HandleErrorDBC(c_hdbc1);

   rc = bcp_bind(c_hdbc1, (BYTE *) c_first, 0, FIRST_NAME_LEN,
NULL, 0, 0, 4);
            if (rc != SUCCEED)
                        HandleErrorDBC(c_hdbc1);

   rc = bcp_bind(c_hdbc1, (BYTE *) c_middle, 0,
MIDDLE_NAME_LEN,NULL,0, 0, 5);
            if (rc != SUCCEED)
                        HandleErrorDBC(c_hdbc1);

   rc = bcp_bind(c_hdbc1, (BYTE *) c_last, 0, LAST_NAME_LEN,
NULL, 0, 0, 6);
            if (rc != SUCCEED)
                        HandleErrorDBC(c_hdbc1);

   rc = bcp_bind(c_hdbc1, (BYTE *) c_street_1, 0, ADDRESS_LEN,
NULL, 0, 0, 7);
            if (rc != SUCCEED)
                        HandleErrorDBC(c_hdbc1);

   rc = bcp_bind(c_hdbc1, (BYTE *) c_street_2, 0, ADDRESS_LEN,
NULL,0,0, 8);
            if (rc != SUCCEED)
                        HandleErrorDBC(c_hdbc1);

   rc = bcp_bind(c_hdbc1, (BYTE *) c_city, 0, ADDRESS_LEN,
NULL, 0, 0, 9);
            if (rc != SUCCEED)
                        HandleErrorDBC(c_hdbc1);

   rc = bcp_bind(c_hdbc1, (BYTE *) c_state, 0, STATE_LEN, NULL,
0, 0, 10);
            if (rc != SUCCEED)
                        HandleErrorDBC(c_hdbc1);

   rc = bcp_bind(c_hdbc1, (BYTE *) c_zip, 0, ZIP_LEN, NULL, 0, 0,
11);
            if (rc != SUCCEED)
                        HandleErrorDBC(c_hdbc1);

   rc = bcp_bind(c_hdbc1, (BYTE *) c_phone, 0, PHONE_LEN,
NULL, 0, 0, 12);
            if (rc != SUCCEED)
                        HandleErrorDBC(c_hdbc1);

            rc = bcp_bind(c_hdbc1, (BYTE *) &c_since, 0,
C_SINCE_LEN, NULL, 0, SQLCHARACTER, 13);
            if (rc != SUCCEED)
                        HandleErrorDBC(c_hdbc1);

   rc = bcp_bind(c_hdbc1, (BYTE *) c_credit, 0, CREDIT_LEN,
NULL, 0, 0, 14);
            if (rc != SUCCEED)
                        HandleErrorDBC(c_hdbc1);

   rc = bcp_bind(c_hdbc1, (BYTE *) &c_credit_lim, 0,
SQL_VARLEN_DATA, NULL, 0, SQLFLT8, 15);
            if (rc != SUCCEED)
                        HandleErrorDBC(c_hdbc1);

   rc = bcp_bind(c_hdbc1, (BYTE *) &c_discount, 0,
SQL_VARLEN_DATA, NULL, 0, SQLFLT8, 16);
            if (rc != SUCCEED)
                        HandleErrorDBC(c_hdbc1);


            // fix to avoid ODBC float to numeric conversion problem.

   // rc = bcp_bind(c_hdbc1, (BYTE *) &c_balance, 0,
SQL_VARLEN_DATA, NULL, 0, SQLFLT8, 17);
            // if (rc != SUCCEED)
            //          HandleErrorDBC(c_hdbc1);
   rc = bcp_bind(c_hdbc1, (BYTE *) c_balance, 0, 5, NULL, 0,
SQLCHARACTER, 17);
            if (rc != SUCCEED)
                        HandleErrorDBC(c_hdbc1);


   rc = bcp_bind(c_hdbc1, (BYTE *) &c_ytd_payment, 0,
SQL_VARLEN_DATA, NULL, 0, SQLFLT8, 18);
            if (rc != SUCCEED)
                        HandleErrorDBC(c_hdbc1);

   rc = bcp_bind(c_hdbc1, (BYTE *) &c_payment_cnt, 0,
SQL_VARLEN_DATA, NULL, 0, SQLINT2, 19);
            if (rc != SUCCEED)
                        HandleErrorDBC(c_hdbc1);

   rc = bcp_bind(c_hdbc1, (BYTE *) &c_delivery_cnt,0,
SQL_VARLEN_DATA, NULL, 0, SQLINT2, 20);
            if (rc != SUCCEED)
                        HandleErrorDBC(c_hdbc1);

   rc = bcp_bind(c_hdbc1, (BYTE *) c_data, 0, 500, NULL, 0, 0, 21);
            if (rc != SUCCEED)
                        HandleErrorDBC(c_hdbc1);

   for (i = 0; i < customers_per_district; i++)
   {
                        c_id = customer_buf[i].c_id;
                        c_d_id = customer_buf[i].c_d_id;
                        c_w_id = customer_buf[i].c_w_id;

                        strcpy(c_first, customer_buf[i].c_first);
                        strcpy(c_middle, customer_buf[i].c_middle);
                        strcpy(c_last, customer_buf[i].c_last);
                        strcpy(c_street_1, customer_buf[i].c_street_1);
                        strcpy(c_street_2, customer_buf[i].c_street_2);
                        strcpy(c_city, customer_buf[i].c_city);
                        strcpy(c_state, customer_buf[i].c_state);
                        strcpy(c_zip, customer_buf[i].c_zip);
                        strcpy(c_phone, customer_buf[i].c_phone);
                        strcpy(c_credit, customer_buf[i].c_credit);

                        FormatDate(&c_since);


                        c_credit_lim = customer_buf[i].c_credit_lim;
                        c_discount = customer_buf[i].c_discount;

                        // fix to avoid ODBC float to numeric
conversion problem.
                        // c_balance = customer_buf[i].c_balance;
```

```
                        strcpy(c_balance, customer_buf[i].c_balance);

                        c_ytd_payment =
customer_buf[i].c_ytd_payment;
                        c_payment_cnt =
customer_buf[i].c_payment_cnt;
                        c_delivery_cnt =
customer_buf[i].c_delivery_cnt;

                        strcpy(c_data, customer_buf[i].c_data);

                        // Send data to server
                        rc = bcp_sendrow(c_hdbc1);
                        if (rc != SUCCEED)
                                HandleErrorDBC(c_hdbc1);

                        customer_rows_loaded++;
                        CheckForCommit(c_hdbc1, c_hstmt1,
customer_rows_loaded, "customer",
&customer_time_start->time_start);
   }

}


//================================================
======================
//
// Function   : LoadHistoryTable
//
//================================================
======================

void LoadHistoryTable(LOADER_TIME_STRUCT
*history_time_start)
{
        int     i;
   long     c_id;
   short    c_d_id;
   long     c_w_id;
        double  h_amount;
   char     h_data[H_DATA_LEN+1];
        char            h_date[H_DATE_LEN+1];
        RETCODE                 rc;

   rc = bcp_bind(c_hdbc2, (BYTE *) &c_id, 0,
SQL_VARLEN_DATA, NULL, 0, SQLINT4, 1);
        if (rc != SUCCEED)
                HandleErrorDBC(c_hdbc2);

   rc = bcp_bind(c_hdbc2, (BYTE *) &c_d_id, 0,
SQL_VARLEN_DATA, NULL, 0, SQLINT2, 2);
        if (rc != SUCCEED)
                HandleErrorDBC(c_hdbc2);

   rc = bcp_bind(c_hdbc2, (BYTE *) &c_w_id, 0,
SQL_VARLEN_DATA, NULL, 0, SQLINT4, 3);
        if (rc != SUCCEED)
                HandleErrorDBC(c_hdbc2);

   rc = bcp_bind(c_hdbc2, (BYTE *) &c_d_id, 0,
SQL_VARLEN_DATA, NULL, 0, SQLINT2, 4);
        if (rc != SUCCEED)
                HandleErrorDBC(c_hdbc2);

   rc = bcp_bind(c_hdbc2, (BYTE *) &c_w_id, 0,
SQL_VARLEN_DATA, NULL, 0, SQLINT4, 5);
        if (rc != SUCCEED)
                HandleErrorDBC(c_hdbc2);

        rc = bcp_bind(c_hdbc2, (BYTE *) &h_date, 0,
H_DATE_LEN, NULL, 0, SQLCHARACTER, 6);
        if (rc != SUCCEED)
                HandleErrorDBC(c_hdbc2);

   rc = bcp_bind(c_hdbc2, (BYTE *) &h_amount, 0,
SQL_VARLEN_DATA, NULL, 0, SQLFLT8, 7);
        if (rc != SUCCEED)
                HandleErrorDBC(c_hdbc2);

   rc = bcp_bind(c_hdbc2, (BYTE *) h_data, 0, H_DATA_LEN,
NULL, 0, 0, 8);
        if (rc != SUCCEED)
                HandleErrorDBC(c_hdbc2);

   for (i = 0; i < customers_per_district; i++)
   {
                        c_id = customer_buf[i].c_id;
                        c_d_id = customer_buf[i].c_d_id;
                        c_w_id = customer_buf[i].c_w_id;
                        h_amount = customer_buf[i].h_amount;
                        strcpy(h_data, customer_buf[i].h_data);

                        FormatDate(&h_date);

                        // send to server
                        rc = bcp_sendrow(c_hdbc2);
                        if (rc != SUCCEED)
                                HandleErrorDBC(c_hdbc2);

                        history_rows_loaded++;
                        CheckForCommit(c_hdbc2, c_hstmt2,
history_rows_loaded, "history", &history_time_start->time_start);
   }

}


//================================================
==========-==========
//
// Function   : LoadOrders
//
//================================================
==========================

void LoadOrders()
{
        LOADER_TIME_STRUCT      orders_time_start;
        LOADER_TIME_STRUCT      new_order_time_start;
        LOADER_TIME_STRUCT      order_line_time_start;
        long                      w_id;
   short        d_id;
        DWORD
dwThreadID[MAX_ORDER_THREADS];
        HANDLE
hThread[MAX_ORDER_THREADS];
        char                      name[20];
        RETCODE
rc;
        char
bcphint[128];

        // seed with unique number
        seed(aptr->starting_warehouse + 5);
```

```
        printf("Loading orders...\n");

        // if build index before load...
        if ((aptr->build_index == 1) && (aptr->index_order == 1))
        {
                        BuildIndex("idxordcl");
                        BuildIndex("idxnodcl");
                        BuildIndex("idxodlcl");
        }

        // initialize bulk copy
        sprintf(name, "%s..%s", aptr->database, "t_orders");

        LOGFILE_CREATE("\\orders.err")
        rc = bcp_init(o_hdbc1, name, NULL, LogFile, DB_IN);
        if (rc != SUCCEED)
                HandleErrorDBC(o_hdbc1);

        if ((aptr->build_index == 1) && (aptr->index_order == 1))
        {
                sprintf(bcphint, "tablock, order (o_w_id, o_d_id,
o_id), ROWS_PER_BATCH = %u, CHECK_CONSTRAINTS",
(aptr->num_warehouses * 30000));
                rc = bcp_control(o_hdbc1, BCPHINTS, (void*)
bcphint);
                if (rc != SUCCEED)
                        HandleErrorDBC(o_hdbc1);
        }

        sprintf(name, "%s..%s", aptr->database, "t_new_order");

        LOGFILE_CREATE("\\neword.err")
        rc = bcp_init(o_hdbc2, name, NULL, LogFile, DB_IN);
        if (rc != SUCCEED)
                HandleErrorDBC(o_hdbc2);

        if ((aptr->build_index == 1) && (aptr->index_order == 1))
        {
                sprintf(bcphint, "tablock, order (no_w_id,
no_d_id, no_o_id), ROWS_PER_BATCH = %u,
CHECK_CONSTRAINTS", (aptr->num_warehouses * 9000));
                rc = bcp_control(o_hdbc2, BCPHINTS, (void*)
bcphint);
                if (rc != SUCCEED)
                        HandleErrorDBC(o_hdbc2);
        }

        sprintf(name, "%s..%s", aptr->database, "t_order_line");

        LOGFILE_CREATE("\\ordline.err")
        rc = bcp_init(o_hdbc3, name, NULL, LogFile, DB_IN);
        if (rc != SUCCEED)
                HandleErrorDBC(o_hdbc3);

   if ((aptr->build_index == 1) && (aptr->index_order == 1))
        {
                sprintf(bcphint, "tablock, order (ol_w_id,
ol_d_id, ol_o_id, ol_number), ROWS_PER_BATCH = %u,
CHECK_CONSTRAINTS", (aptr->num_warehouses * 300000));
                rc = bcp_control(o_hdbc3, BCPHINTS, (void*)
bcphint);
                if (rc != SUCCEED)
                        HandleErrorDBC(o_hdbc3);
        }

        orders_rows_loaded     = 0;
        new_order_rows_loaded  = 0;
        order_line_rows_loaded = 0;

        OrdersBufInit();

        orders_time_start.time_start = (TimeNow() / MILLI);
        new_order_time_start.time_start = (TimeNow() / MILLI);
        order_line_time_start.time_start = (TimeNow() / MILLI);

        for (w_id = (long)aptr->starting_warehouse; w_id <=
aptr->num_warehouses; w_id++)
        {
                for (d_id = 1; d_id <=
DISTRICT_PER_WAREHOUSE; d_id++)
                {
                        OrdersBufLoad(d_id, w_id);

                        // start parallel loading threads here...

                        // start Orders table thread

                        printf("...Loading Order Table for:
d_id = %d, w_id = %d\n", d_id, w_id);

                        hThread[0] = CreateThread(NULL,

                0,

                (LPTHREAD_START_ROUTINE)
LoadOrdersTable,

                &orders_time_start,

                0,

                &dwThreadID[0]);

                        if (hThread[0] == NULL)
                        {
                                printf("Error, failed in
creating creating thread = 0.\n");
                                exit(-1);
                        }

                        // start NewOrder table thread

                        printf("...Loading New-Order Table
for: d_id = %d, w_id = %d\n", d_id, w_id);

                        hThread[1] = CreateThread(NULL,

                0,

                (LPTHREAD_START_ROUTINE)
LoadNewOrderTable,

                &new_order_time_start,

                0,

                &dwThreadID[1]);

                        if (hThread[1] == NULL)
                        {
                                printf("Error, failed in
creating creating thread = 1.\n");
                                exit(-1);
                        }
```

```
                                        // start Order-Line table thread

                                        printf("...Loading Order-Line Table
for: d_id = %d, w_id = %d\n", d_id, w_id);

                                        hThread[2] = CreateThread(NULL,

                        0,

                        (LPTHREAD_START_ROUTINE)
LoadOrderLineTable,

                        &order_line_time_start,

                        0,

                        &dwThreadID[2]);

                                        if (hThread[2] == NULL)
                                        {
                                                printf("Error, failed in
creating creating thread = 2.\n");
                                                exit(-1);
                                        }

                                        WaitForSingleObject( hThread[0],
INFINITE );
                                        WaitForSingleObject( hThread[1],
INFINITE );
                                        WaitForSingleObject( hThread[2],
INFINITE );

                                        if (CloseHandle(hThread[0]) ==
FALSE)
                                        {
                                                printf("Error, failed in
closing Orders thread handle with errno: %d\n", GetLastError());
                                        }

                                        if (CloseHandle(hThread[1]) ==
FALSE)
                                        {
                                                printf("Error, failed in
closing NewOrder thread handle with errno: %d\n", GetLastError());
                                        }

                                        if (CloseHandle(hThread[2]) ==
FALSE)
                                        {
                                                printf("Error, failed in
closing OrderLine thread handle with errno: %d\n", GetLastError());
                                        }

                                }
                        }

                        printf("Finished loading orders.\n");


   return;
}


//================================================
=====================
//
// Function   : OrdersBufInit
//
// Clears shared buffer for ORDERS, NEWORDER, and ORDERLINE
//
//================================================
=====================

void OrdersBufInit()
{
        int     i;
        int                     j;

        for (i=0;i<orders_per_district;i++)
        {
                orders_buf[i].o_id = 0;
                orders_buf[i].o_d_id = 0;
                orders_buf[i].o_w_id = 0;
                orders_buf[i].o_c_id = 0;
                orders_buf[i].o_carrier_id = 0;
                orders_buf[i].o_ol_cnt = 0;
                orders_buf[i].o_all_local = 0;

                for (j=0;j<=14;j++)
                {
                        orders_buf[i].o_ol[j].ol = 0;
                        orders_buf[i].o_ol[j].ol_i_id = 0;

                        orders_buf[i].o_ol[j].ol_supply_w_id
= 0;
                        orders_buf[i].o_ol[j].ol_quantity = 0;
                        orders_buf[i].o_ol[j].ol_amount = 0;

strcpy(orders_buf[i].o_ol[j].ol_dist_info,"");
                        }
        }


}


//================================================
=====================
//
// Function   : OrdersBufLoad
//
// Fills shared buffer for ORDERS, NEWORDER, and ORDERLINE
//
//================================================
=====================

void OrdersBufLoad(int d_id, int w_id)
{

        int     cust[ORDERS_PER_DISTRICT+1];
        long    o_id;
        short   ol;

        printf("...Loading Order Buffer for: d_id = %d, w_id =
%d\n",
                                d_id, w_id);

        GetPermutation(cust, orders_per_district);

        for (o_id=0;o_id<orders_per_district;o_id++)
        {

                // Generate ORDER and NEW-ORDER data

                orders_buf[o_id].o_d_id = d_id;
                orders_buf[o_id].o_w_id = w_id;
```

```
                        orders_buf[o_id].o_id = o_id+1;
                        orders_buf[o_id].o_c_id = cust[o_id+1];
                        orders_buf[o_id].o_ol_cnt =
(short)RandomNumber(5L, 15L);

                        if (o_id < first_new_order)
                        {
                                orders_buf[o_id].o_carrier_id =
(short)RandomNumber(1L, 10L);
                                orders_buf[o_id].o_all_local  = 1;
                        }
                        else
                        {
                                orders_buf[o_id].o_carrier_id = 0;
                                orders_buf[o_id].o_all_local  = 1;
                        }

                        for (ol=0; ol<orders_buf[o_id].o_ol_cnt; ol++)
                        {

                                orders_buf[o_id].o_ol[ol].ol = ol+1;
                                orders_buf[o_id].o_ol[ol].ol_i_id =
RandomNumber(1L, max_items);

orders_buf[o_id].o_ol[ol].ol_supply_w_id = w_id;
                                orders_buf[o_id].o_ol[ol].ol_quantity
= 5;
                                MakeAlphaString(24, 24,
OL_DIST_INFO_LEN,&orders_buf[o_id].o_ol[ol].ol_dist_info);

                                // Generate ORDER-LINE data
                                if (o_id < first_new_order)
                                {


orders_buf[o_id].o_ol[ol].ol_amount = 0;
                                                // Added to insure
ol_delivery_d set properly during load


FormatDate(&orders_buf[o_id].o_ol[ol].ol_delivery_d);

                                }
                                else
                                {


orders_buf[o_id].o_ol[ol].ol_amount =
RandomNumber(1,999999)/100.0;
                                                // Added to insure
ol_delivery_d set properly during load

                                                // odbc datetime format

strcpy(orders_buf[o_id].o_ol[ol].ol_delivery_d,"1899-12-31
00:00:00.000");

                                }
                        }
                }
}


//================================================
=====================
//
// Function   : LoadOrdersTable
//
//================================================
=====================

void LoadOrdersTable(LOADER_TIME_STRUCT*orders_time_start)
{
                int        i;
   long         o_id;
                short         o_d_id;
                long          o_w_id;
   long         o_c_id;
   short        o_carrier_id;
   short        o_ol_cnt;
   short        o_all_local;
                char                    o_entry_d[O_ENTRY_D_LEN+1];
                RETCODE                         rc;
                DBINT                   rcint;

                // bind ORDER data
   rc = bcp_bind(o_hdbc1, (BYTE *) &o_id, 0,
SQL_VARLEN_DATA, NULL, 0, SQLINT4, 1);
                if (rc != SUCCEED)
                        HandleErrorDBC(o_hdbc1);

   rc = bcp_bind(o_hdbc1, (BYTE *) &o_d_id, 0,
SQL_VARLEN_DATA, NULL, 0, SQLINT2, 2);
                if (rc != SUCCEED)
                        HandleErrorDBC(o_hdbc1);

   rc = bcp_bind(o_hdbc1, (BYTE *) &o_w_id, 0,
SQL_VARLEN_DATA, NULL, 0, SQLINT4, 3);
                if (rc != SUCCEED)
                        HandleErrorDBC(o_hdbc1);

   rc = bcp_bind(o_hdbc1, (BYTE *) &o_c_id, 0,
SQL_VARLEN_DATA, NULL, 0, SQLINT4, 4);
                if (rc != SUCCEED)
                        HandleErrorDBC(o_hdbc1);

                rc = bcp_bind(o_hdbc1, (BYTE *) &o_entry_d, 0,
O_ENTRY_D_LEN, NULL, 0, SQLCHARACTER, 5);
                if (rc != SUCCEED)
                        HandleErrorDBC(o_hdbc1);

   rc = bcp_bind(o_hdbc1, (BYTE *) &o_carrier_id, 0,
SQL_VARLEN_DATA, NULL, 0, SQLINT2, 6);
                if (rc != SUCCEED)
                        HandleErrorDBC(o_hdbc1);

   rc = bcp_bind(o_hdbc1, (BYTE *) &o_ol_cnt, 0,
SQL_VARLEN_DATA, NULL, 0, SQLINT2, 7);
                if (rc != SUCCEED)
                        HandleErrorDBC(o_hdbc1);

   rc = bcp_bind(o_hdbc1, (BYTE *) &o_all_local, 0,
SQL_VARLEN_DATA, NULL, 0, SQLINT2, 8);
                if (rc != SUCCEED)
                        HandleErrorDBC(o_hdbc1);

   for (i = 0; i < orders_per_district; i++)
   {
                        o_id         = orders_buf[i].o_id;
                        o_d_id       = orders_buf[i].o_d_id;
                        o_w_id       = orders_buf[i].o_w_id;
                        o_c_id       = orders_buf[i].o_c_id;
                        o_carrier_id = orders_buf[i].o_carrier_id;
                        o_ol_cnt     = orders_buf[i].o_ol_cnt;
                        o_all_local  = orders_buf[i].o_all_local;
```

```
                        FormatDate(&o_entry_d);

                        // send data to server
                        rc = bcp_sendrow(o_hdbc1);
                        if (rc != SUCCEED)
                                HandleErrorDBC(o_hdbc1);

                        orders_rows_loaded++;
                        CheckForCommit(o_hdbc1, o_hstmt1,
orders_rows_loaded, "orders", &orders_time_start->time_start);
   }

        // rcint = bcp_batch(o_hdbc1);
        // if (rcint < 0)
        //      HandleErrorDBC(o_hdbc1);

        if ((o_w_id == aptr->num_warehouses) && (o_d_id ==
10))
        {
                rcint = bcp_done(o_hdbc1);
                if (rcint < 0)
                        HandleErrorDBC(o_hdbc1);

                SQLFreeStmt(o_hstmt1, SQL_DROP);
                SQLDisconnect(o_hdbc1);
                SQLFreeConnect(o_hdbc1);

                // if build index after load...
                if ((aptr->build_index == 1) &&
(aptr->index_order == 0))
                        BuildIndex("idxordcl");

                // build non-clustered index
                if (aptr->build_index == 1)
                        BuildIndex("idxordnc");
        }

}


//================================================
=====================
//
// Function   : LoadNewOrderTable
//
//================================================
=====================

void LoadNewOrderTable(LOADER_TIME_STRUCT
*new_order_time_start)
{
   int      i;
   long     o_id;
   short    o_d_id;
   long     o_w_id;
        RETCODE                 rc;
        DBINT           rcint;

        // Bind NEW-ORDER data

   rc = bcp_bind(o_hdbc2, (BYTE *) &o_id, 0,
SQL_VARLEN_DATA, NULL, 0, SQLINT4, 1);
        if (rc != SUCCEED)
                HandleErrorDBC(o_hdbc2);

   rc = bcp_bind(o_hdbc2, (BYTE *) &o_d_id, 0,
SQL_VARLEN_DATA, NULL, 0, SQLINT2, 2);
        if (rc != SUCCEED)
                HandleErrorDBC(o_hdbc2);

   rc = bcp_bind(o_hdbc2, (BYTE *) &o_w_id, 0,
SQL_VARLEN_DATA, NULL, 0, SQLINT4, 3);
        if (rc != SUCCEED)
                HandleErrorDBC(o_hdbc2);

        for (i = first_new_order; i < last_new_order; i++)
        {
                o_id    = orders_buf[i].o_id;
                o_d_id  = orders_buf[i].o_d_id;
                o_w_id  = orders_buf[i].o_w_id;

                rc = bcp_sendrow(o_hdbc2);
                if (rc != SUCCEED)
                        HandleErrorDBC(o_hdbc2);

                new_order_rows_loaded++;

                CheckForCommit(o_hdbc2, o_hstmt2,
new_order_rows_loaded, "new_order",
&new_order_time_start->time_start);
        }

        // rcint = bcp_batch(o_hdbc2);
        // if (rcint < 0)
        //      HandleErrorDBC(o_hdbc2);

        if ((o_w_id == aptr->num_warehouses) && (o_d_id ==
10))
        {
                rcint = bcp_done(o_hdbc2);
                if (rcint < 0)
                        HandleErrorDBC(o_hdbc2);

                SQLFreeStmt(o_hstmt2, SQL_DROP);
                SQLDisconnect(o_hdbc2);
                SQLFreeConnect(o_hdbc2);

                // if build index after load...
                if ((aptr->build_index == 1) &&
(aptr->index_order == 0))
                        BuildIndex("idxnodcl");

        }

}


//================================================
=====================
//
// Function   : LoadOrderLineTable
//
//================================================
=====================

void LoadOrderLineTable(LOADER_TIME_STRUCT
*order_line_time_start)
{
        int     i,j;
   long     o_id;
        short   o_d_id;
        long    o_w_id;
   long     ol;
        long    ol_i_id;
   long     ol_supply_w_id;
   short    ol_quantity;
```

```
   double      ol_amount;
   char        ol_dist_info[DIST_INFO_LEN+1];
               char
ol_delivery_d[OL_DELIVERY_D_LEN+1];
               RETCODE                         rc;
               DBINT                   rcint;

               // bind ORDER-LINE data
   rc = bcp_bind(o_hdbc3, (BYTE *) &o_id, 0,
SQL_VARLEN_DATA, NULL, 0, SQLINT4, 1);
               if (rc != SUCCEED)
                        HandleErrorDBC(o_hdbc3);

   rc = bcp_bind(o_hdbc3, (BYTE *) &o_d_id, 0,
SQL_VARLEN_DATA, NULL, 0, SQLINT2, 2);
               if (rc != SUCCEED)
                        HandleErrorDBC(o_hdbc3);

   rc = bcp_bind(o_hdbc3, (BYTE *) &o_w_id, 0,
SQL_VARLEN_DATA, NULL, 0, SQLINT4, 3);
               if (rc != SUCCEED)
                        HandleErrorDBC(o_hdbc3);

   rc = bcp_bind(o_hdbc3, (BYTE *) &ol, 0, SQL_VARLEN_DATA,
NULL, 0, SQLINT4, 4);
               if (rc != SUCCEED)
                        HandleErrorDBC(o_hdbc3);

   rc = bcp_bind(o_hdbc3, (BYTE *) &ol_i_id, 0,
SQL_VARLEN_DATA, NULL, 0, SQLINT4, 5);
               if (rc != SUCCEED)
                        HandleErrorDBC(o_hdbc3);

   rc = bcp_bind(o_hdbc3, (BYTE *) &ol_supply_w_id, 0,
SQL_VARLEN_DATA, NULL, 0, SQLINT4, 6);
               if (rc != SUCCEED)
                        HandleErrorDBC(o_hdbc3);

               rc = bcp_bind(o_hdbc3, (BYTE *) &ol_delivery_d, 0,
OL_DELIVERY_D_LEN, NULL, 0, SQLCHARACTER, 7);
               if (rc != SUCCEED)
                        HandleErrorDBC(o_hdbc3);

   rc = bcp_bind(o_hdbc3, (BYTE *) &ol_quantity, 0,
SQL_VARLEN_DATA, NULL, 0, SQLINT2, 8);
               if (rc != SUCCEED)
                        HandleErrorDBC(o_hdbc3);

   rc = bcp_bind(o_hdbc3, (BYTE *) &ol_amount, 0,
SQL_VARLEN_DATA, NULL, 0, SQLFLT8, 9);
               if (rc != SUCCEED)
                        HandleErrorDBC(o_hdbc3);

   rc = bcp_bind(o_hdbc3, (BYTE *) ol_dist_info, 0,
DIST_INFO_LEN, NULL, 0, 0, 10);
               if (rc != SUCCEED)
                        HandleErrorDBC(o_hdbc3);

               for (i = 0; i < orders_per_district; i++)
   {
                        o_id    = orders_buf[i].o_id;
                        o_d_id  = orders_buf[i].o_d_id;
                        o_w_id  = orders_buf[i].o_w_id;

                        for (j=0; j < orders_buf[i].o_ol_cnt; j++)
                        {
                                 ol          = orders_buf[i].o_ol[j].ol;
                                 ol_i_id     =
orders_buf[i].o_ol[j].ol_i_id;
                                 ol_supply_w_id =
orders_buf[i].o_ol[j].ol_supply_w_id;
                                 ol_quantity    =
orders_buf[i].o_ol[j].ol_quantity;
                                 ol_amount      =
orders_buf[i].o_ol[j].ol_amount;

strcpy(ol_delivery_d,orders_buf[i].o_ol[j].ol_delivery_d);


strcpy(ol_dist_info,orders_buf[i].o_ol[j].ol_dist_info);

                                 rc = bcp_sendrow(o_hdbc3);
                                 if (rc != SUCCEED)

HandleErrorDBC(o_hdbc3);

                                 order_line_rows_loaded++;
                                 CheckForCommit(o_hdbc3,
o_hstmt3, order_line_rows_loaded, "order_line",
&order_line_time_start->time_start);
                        }

               }

               // rcint = bcp_batch(o_hdbc3);
               // if (rcint < 0)
               //          HandleErrorDBC(o_hdbc3);

               if ((o_w_id == aptr->num_warehouses) && (o_d_id ==
10))
               {
                        rcint = bcp_done(o_hdbc3);
                        if (rcint < 0)
                                 HandleErrorDBC(o_hdbc3);

                        SQLFreeStmt(o_hstmt3, SQL_DROP);
                        SQLDisconnect(o_hdbc3);
                        SQLFreeConnect(o_hdbc3);

                        // if build index after load...
                        if ((aptr->build_index == 1) &&
(aptr->index_order == 0))
                                 BuildIndex("idxodlcl");

               }

}


//=============================================
=====================
//
// Function   : GetPermutation
//
//=============================================
=====================

void GetPermutation(int perm[], int n)
{
               int i, r, t;

               for (i=1;i<=n;i++)
                        perm[i] = i;

               for (i=1;i<=n;i++)
```

```
        {
                r = RandomNumber(i,n);
                t = perm[i];
                perm[i] = perm[r];
                perm[r] = t;
        }

}


//================================================
=====================
//
// Function   : CheckForCommit
//
//================================================
=====================

void CheckForCommit(HDBC hdbc,
                                        HSTMT hstmt,
                                long rows_loaded,
                                        char
*table_name,
                                long *time_start)
{

   long     time_end, time_diff;
        // DBINT  rcint;

   if ( !(rows_loaded % aptr->batch) )
   {

                // rcint = bcp_batch(hdbc);
                // if (rcint < 0)
                //      HandleErrorDBC(hdbc);

                time_end = (TimeNow() / MILLI);
                time_diff = time_end - *time_start;

                printf("-> Loaded %ld rows into %s in %ld sec -
Total = %d (%.2f rps)\n",
                        aptr->batch,
                        table_name,
                                time_diff,
                        rows_loaded,
                                (float) aptr->batch /
(time_diff ? time_diff : 1L));

                *time_start = time_end;
   }

   return;
}


//================================================
=====================
//
// Function   : OpenConnections
//
//================================================
=====================

void OpenConnections()
{

        RETCODE         rc;
        char                    szDriverString[300];
        char                    szDriverStringOut[1024];
        SQLSMALLINT             cbDriverStringOut;


        SQLAllocHandle(SQL_HANDLE_ENV,
SQL_NULL_HANDLE,&henv );

        SQLSetEnvAttr(henv, SQL_ATTR_ODBC_VERSION,
(void*)SQL_OV_ODBC3, 0 );

        SQLAllocHandle(SQL_HANDLE_DBC,henv , &i_hdbc1);
        SQLAllocHandle(SQL_HANDLE_DBC,henv ,
&w_hdbc1);
        SQLAllocHandle(SQL_HANDLE_DBC,henv ,
&c_hdbc1);
        SQLAllocHandle(SQL_HANDLE_DBC,henv ,
&c_hdbc2);
        SQLAllocHandle(SQL_HANDLE_DBC,henv ,
&o_hdbc1);
        SQLAllocHandle(SQL_HANDLE_DBC,henv ,
&o_hdbc2);
        SQLAllocHandle(SQL_HANDLE_DBC,henv ,
&o_hdbc3);

        SQLSetConnectAttr(i_hdbc1, SQL_COPT_SS_BCP, (void
*)SQL_BCP_ON, SQL_IS_INTEGER);
        SQLSetConnectAttr(w_hdbc1, SQL_COPT_SS_BCP, (void
*)SQL_BCP_ON, SQL_IS_INTEGER);
        SQLSetConnectAttr(c_hdbc1, SQL_COPT_SS_BCP, (void
*)SQL_BCP_ON, SQL_IS_INTEGER);
        SQLSetConnectAttr(c_hdbc2, SQL_COPT_SS_BCP, (void
*)SQL_BCP_ON, SQL_IS_INTEGER);
        SQLSetConnectAttr(o_hdbc1, SQL_COPT_SS_BCP, (void
*)SQL_BCP_ON, SQL_IS_INTEGER);
        SQLSetConnectAttr(o_hdbc2, SQL_COPT_SS_BCP, (void
*)SQL_BCP_ON, SQL_IS_INTEGER);
        SQLSetConnectAttr(o_hdbc3, SQL_COPT_SS_BCP, (void
*)SQL_BCP_ON, SQL_IS_INTEGER);

        // Open connections to SQL Server

        // Connection 1

        sprintf( szDriverString , "DRIVER={SQL
Server};SERVER=%s;UID=%s;PWD=%s;DATABASE=%s",

aptr->server,

aptr->user,

aptr->password,

aptr->database );

        rc = SQLSetConnectOption (i_hdbc1,
SQL_PACKET_SIZE,aptr->pack_size);
        if (rc != SUCCEED)
                HandleErrorDBC(i_hdbc1);

        rc = SQLDriverConnect ( i_hdbc1,
                                                NULL,

(SQLCHAR*)&szDriverString[0],

SQL_NTS,

(SQLCHAR*)&szDriverStringOut[0],
```

```
sizeof(szDriverStringOut),

&cbDriverStringOut,

SQL_DRIVER_NOPROMPT );
        if (rc != SUCCEED)
                HandleErrorDBC(i_hdbc1);

        // Connection 2

        sprintf( szDriverString , "DRIVER={SQL
Server};SERVER=%s;UID=%s;PWD=%s;DATABASE=%s",

aptr->server,

aptr->user,

aptr->password,

aptr->database );

        rc = SQLSetConnectOption (w_hdbc1,
SQL_PACKET_SIZE, aptr->pack_size);
        if (rc != SUCCEED)
                HandleErrorDBC(w_hdbc1);

        rc = SQLDriverConnect ( w_hdbc1,

NULL,

(SQLCHAR*)&szDriverString[0] ,

SQL_NTS,

(SQLCHAR*)&szDriverStringOut[0],

sizeof(szDriverStringOut),

&cbDriverStringOut,

SQL_DRIVER_NOPROMPT );
        if (rc != SUCCEED)
                HandleErrorDBC(w_hdbc1);

        // Connection 3

        sprintf( szDriverString , "DRIVER={SQL
Server};SERVER=%s;UID=%s;PWD=%s;DATABASE=%s",

aptr->server,

aptr->user,

aptr->password,

aptr->database );

        rc = SQLSetConnectOption (c_hdbc1,
SQL_PACKET_SIZE, aptr->pack_size);
        if (rc != SUCCEED)
                HandleErrorDBC(c_hdbc1);

        rc = SQLDriverConnect ( c_hdbc1,

NULL,

(SQLCHAR*)&szDriverString[0] ,

SQL_NTS,

(SQLCHAR*)&szDriverStringOut[0],

sizeof(szDriverStringOut),

&cbDriverStringOut,

SQL_DRIVER_NOPROMPT );
        if (rc != SUCCEED)
                HandleErrorDBC(c_hdbc1);

        // Connection 4

        sprintf( szDriverString , "DRIVER={SQL
Server};SERVER=%s;UID=%s;PWD=%s;DATABASE=%s",

aptr->server,

aptr->user,

aptr->password,

aptr->database );

        rc = SQLSetConnectOption (c_hdbc2,
SQL_PACKET_SIZE, aptr->pack_size);
        if (rc != SUCCEED)
                HandleErrorDBC(c_hdbc2);

        rc = SQLDriverConnect ( c_hdbc2,

NULL,

(SQLCHAR*)&szDriverString[0] ,

SQL_NTS,

(SQLCHAR*)&szDriverStringOut[0],

sizeof(szDriverStringOut),

&cbDriverStringOut,

SQL_DRIVER_NOPROMPT );
        if (rc != SUCCEED)
                HandleErrorDBC(c_hdbc2);

        // Connection 5

        sprintf( szDriverString , "DRIVER={SQL
Server};SERVER=%s;UID=%s;PWD=%s;DATABASE=%s",

aptr->server,

aptr->user,

aptr->password,

aptr->database );

        rc = SQLSetConnectOption (o_hdbc1,
SQL_PACKET_SIZE, aptr->pack_size);
        if (rc != SUCCEED)
                HandleErrorDBC(o_hdbc1);

        rc = SQLDriverConnect ( o_hdbc1,
```

```
NULL,

(SQLCHAR*)&szDriverString[0],

SQL_NTS,

(SQLCHAR*)&szDriverStringOut[0],

sizeof(szDriverStringOut),

&cbDriverStringOut,

SQL_DRIVER_NOPROMPT);
        if (rc != SUCCEED)
                HandleErrorDBC(o_hdbc1);

        // Connection 6

        sprintf( szDriverString , "DRIVER={SQL
Server};SERVER=%s;UID=%s;PWD=%s;DATABASE=%s",

aptr->server,

aptr->user,

aptr->password,

aptr->database );

        rc = SQLSetConnectOption (o_hdbc2,
SQL_PACKET_SIZE, aptr->pack_size);
        if (rc != SUCCEED)
                HandleErrorDBC(o_hdbc2);

        rc = SQLDriverConnect ( o_hdbc2,

NULL,

(SQLCHAR*)&szDriverString[0],

SQL_NTS,

(SQLCHAR*)&szDriverStringOut[0],

sizeof(szDriverStringOut),

&cbDriverStringOut,

SQL_DRIVER_NOPROMPT);
        if (rc != SUCCEED)
                HandleErrorDBC(o_hdbc2);

        // Connection 7

        sprintf( szDriverString , "DRIVER={SQL
Server};SERVER=%s;UID=%s;PWD=%s;DATABASE=%s",

aptr->server,

aptr->user,

aptr->password,

aptr->database );

        rc = SQLSetConnectOption (o_hdbc3,
SQL_PACKET_SIZE, aptr->pack_size);
        if (rc != SUCCEED)
                HandleErrorDBC(o_hdbc3);

        rc = SQLDriverConnect ( o_hdbc3,

NULL,

(SQLCHAR*)&szDriverString[0],

SQL_NTS,

(SQLCHAR*)&szDriverStringOut[0],

sizeof(szDriverStringOut),

&cbDriverStringOut,

SQL_DRIVER_NOPROMPT);
        if (rc != SUCCEED)
                HandleErrorDBC(o_hdbc3);

}

//================================================
=====================
//
// Function name: BuildIndex
//
//================================================
=====================

void BuildIndex(char *index_script)
{
        char        cmd[256];

        printf("Starting index creation:  %s\n",index_script);

        sprintf(cmd, "isql -S%s -U%s -P%s -e -i%s\\%s.sql >
%s\\%s.log",
                                        aptr->server,
                                        aptr->user,
                                        aptr->password,
                                        aptr->index_script_path,
                                        index_script,
                                        LogBase,
                                        index_script);

        system(cmd);

        printf("Finished index creation:  %s\n",index_script);
}


void HandleErrorDBC (SQLHDBC  hdbc1)
{

        SQLCHAR                 SqlState[6],
Msg[SQL_MAX_MESSAGE_LENGTH];
        SQLINTEGER  NativeError;
        SQLSMALLINTi, MsgLen;
        SQLRETURN   rc2;
        char                    timebuf[128];
        char                    datebuf[128];
        FILE                    *fp1;

        i = 1;
        while (( rc2 = SQLGetDiagRec(SQL_HANDLE_DBC,
hdbc1, i, SqlState , &NativeError,
```

```
                                        Msg, sizeof(Msg) ,
&MsgLen )) != SQL_NO_DATA )
        {

                sprintf( szLastError , "%s" ,  Msg );

                _strtime(timebuf);
                _strdate(datebuf);

                printf( "[%s : %s] %s\n" , datebuf, timebuf,
szLastError);

                LOGFILE_CREATE("\\tpccldr.err")
                fp1 = fopen(LogFile,"w");
                if (fp1 == NULL)
                        printf("ERROR:  Unable to open
errorlog file.\n");
                else
                {
                        fprintf(fp1, "[%s : %s] %s\n" ,
datebuf, timebuf, szLastError);
                        fclose(fp1);
                }

                i++;

        }
}

void HandleErrorSTMT (HSTMT  hstmt1)
{

        SQLCHAR                 SqlState[6],
Msg[SQL_MAX_MESSAGE_LENGTH];
        SQLINTEGER  NativeError;
        SQLSMALLINTi, MsgLen;
        SQLRETURN   rc2;
        char            timebuf[128];
        char            datebuf[128];
        FILE            *fp1;

        i = 1;
        while (( rc2 = SQLGetDiagRec(SQL_HANDLE_STMT,
hstmt1, i, SqlState , &NativeError,
                                        Msg, sizeof(Msg) ,
&MsgLen )) != SQL_NO_DATA )
        {

                sprintf( szLastError , "%s" ,  Msg );

                _strtime(timebuf);
                _strdate(datebuf);

                printf( "[%s : %s] %s\n" , datebuf, timebuf,
szLastError);

                LOGFILE_CREATE("\\tpccldr.err")
                fp1 = fopen(LogFile,"w");
                if (fp1 == NULL)
                        printf("ERROR:  Unable to open
errorlog file.\n");
                else
                {
                        fprintf(fp1, "[%s : %s] %s\n" ,
datebuf, timebuf, szLastError);
                        fclose(fp1);
                }

                i++;

        }
}


void FormatDate ( char* szTimeCOutput )
{

        struct tm when;
        time_t now;

        time( &now );
        when  = *localtime( &now );

        mktime( &when );

        // odbc datetime format
        strftime( szTimeCOutput , 30 , "%Y-%m-%d
%H:%M:%S.000", &when );

        return;

}

//================================================
======================
//
// Function   : CheckDataBase
//
//================================================
======================

void CheckDataBase()
{

        RETCODE         rc;

        char                    szDriverString[300];
        char                    szDriverStringOut[1024];
        char                    TablesBitMap[9] =
{"000000000"};
        int                             i, ExitFlag;

        SQLSMALLINT             cbDriverStringOut;
        SQLCHAR                         TabName[10];
        SQLINTEGER              TabNameInd, TabCount,
TabCountInd;


        ExitFlag = 0;

        SQLAllocHandle(SQL_HANDLE_ENV,
SQL_NULL_HANDLE,&henv );

        SQLSetEnvAttr(henv, SQL_ATTR_ODBC_VERSION,
(void*)SQL_OV_ODBC3, 0 );

        SQLAllocHandle(SQL_HANDLE_DBC,henv , &v_hdbc);

        SQLSetConnectAttr(v_hdbc, SQL_COPT_SS_BCP, (void
*)SQL_BCP_ON, SQL_IS_INTEGER );

        // Open connection to SQL Server

        sprintf( szDriverString , "DRIVER={SQL
Server};SERVER=%s;UID=%s;PWD=%s;DATABASE=%s",
```

```
aptr->server,

aptr->user,

aptr->password,

aptr->database );

        rc = SQLSetConnectAttr( v_hdbc,
SQL_ATTR_PACKET_SIZE,(SQLPOINTER)aptr->pack_size,
SQL_IS_UINTEGER );
        if (rc != SQL_SUCCESS)
                HandleErrorDBC(v_hdbc);

        rc = SQLDriverConnect ( v_hdbc,
                                                        NULL,

(SQLCHAR*)&szDriverString[0] ,

SQL_NTS,

(SQLCHAR*)&szDriverStringOut[0],

sizeof(szDriverStringOut),

&cbDriverStringOut,

SQL_DRIVER_NOPROMPT );

        // if the rc is SQL_ERROR, the the TPCC database
probably does not exist
        if (rc == SQL_ERROR)
        {
                printf("The database TPCC does not appear to
exist!\n");
                printf("\nCheck %s\\ directory for database
creation errors.\n", LogBase);

                // cleanup database connections and handles
                SQLFreeHandle(SQL_HANDLE_STMT,
v_hstmt);
                SQLDisconnect(v_hdbc);
                SQLFreeHandle(SQL_HANDLE_DBC,
v_hdbc);

                // since there is not a database, exit back to
SETUP.CMD
                exit(1);
        }

        if ( SQLAllocHandle(SQL_HANDLE_STMT,v_hdbc ,
&v_hstmt) != SQL_SUCCESS )
                HandleErrorDBC(v_hdbc);

        if ( SQLBindCol(v_hstmt, 1, SQL_C_ULONG,
&TabCount, 0, &TabCountInd) != SQL_SUCCESS )
                HandleErrorSTMT(v_hstmt);

        // count the number of user tables from sysobjects
        rc = SQLExecDirect(v_hstmt, "select count(*) from
sysobjects where xtype = \'U\'", SQL_NTS);
        if ((rc != SQL_SUCCESS) && (rc !=
SQL_SUCCESS_WITH_INFO))
                HandleErrorSTMT(v_hstmt);

        if ( SQLFetch(v_hstmt) != SQL_SUCCESS )
                HandleErrorSTMT(v_hstmt);

        // if the number of tables is less than 9, select all the user
tables in TPCC
        if (TabCount != 9)
        {
                SQLFreeHandle(SQL_HANDLE_STMT,
v_hstmt);

                SQLAllocHandle(SQL_HANDLE_STMT,
v_hdbc , &v_hstmt);

                if ( SQLBindCol(v_hstmt, 1, SQL_C_CHAR,
&TabName, sizeof(TabName), &TabNameInd) != SQL_SUCCESS )
                        HandleErrorSTMT(v_hstmt);

                // select the list of user tables into a result set
                rc = SQLExecDirect(v_hstmt, "select * from
sysobjects where xtype = \'U\'", SQL_NTS);
                if ((rc != SQL_SUCCESS) && (rc !=
SQL_SUCCESS_WITH_INFO))
                        HandleErrorSTMT(v_hstmt);

                // go through the result set and set the bitmap for
each found table
                // set the bitmap to '1' if the table name is found

                while ((rc = SQLFetch(v_hstmt)) !=
SQL_NO_DATA)
                {
                        switch( TabName[0] )
                        {
                        case 'w':
                                TablesBitMap[0] = '1';
                                break;
                        case 'd':
                                TablesBitMap[1] = '1';
                                break;
                        case 'c':
                                TablesBitMap[2] = '1';
                                break;
                        case 'h':
                                TablesBitMap[3] = '1';
                                break;
                        case 'n':
                                TablesBitMap[4] = '1';
                                break;
                        case 'o':
                                if (TabName[5] = 's')

TablesBitMap[5] = '1';
                                if (TabName[5] = '_')

TablesBitMap[6] = '1';
                                break;
                        case 'i':
                                TablesBitMap[7] = '1';
                                break;
                        case 's':
                                TablesBitMap[8] = '1';
                                break;
                        }
                }

                // a '0' ExitFlag means do NOT exit the loader
early, a '1' means exit the loader early
                ExitFlag = 0;
```

```
                // interate through the bitmap to display which
table(s) is actually missing
                for (i = 0; i <= 8; i++)
                {
                        switch(i)
                        {
                        case 0:
                                if (TablesBitMap[i] == '0')
                                {
                                        printf("The
Warehouse table is missing or damaged.\n");
                                        ExitFlag = 1;
                                }
                                break;
                        case 1:
                                if (TablesBitMap[i] == '0')
                                {
                                        printf("The
District table is missing or damaged.\n");
                                        ExitFlag = 1;
                                }
                                break;
                        case 2:
                                if (TablesBitMap[i] == '0')
                                {
                                        printf("The
Customer table is missing or damaged.\n");
                                        ExitFlag = 1;
                                }
                                break;
                        case 3:
                                if (TablesBitMap[i] == '0')
                                {
                                        printf("The
History table is missing or damaged.\n");
                                        ExitFlag = 1;
                                }
                                break;
                        case 4:
                                if (TablesBitMap[i] == '0')
                                {
                                        printf("The
New_Order table is missing or damaged.\n");
                                        ExitFlag = 1;
                                }
                                break;
                        case 5:
                                if (TablesBitMap[i] == '0')
                                {
                                        printf("The
Orders table is missing or damaged.\n");
                                        ExitFlag = 1;
                                }
                                break;
                        case 6:
                                if (TablesBitMap[i] == '0')
                                {
                                        printf("The
Order_Line table is missing or damaged.\n");
                                        ExitFlag = 1;
                                }
                                break;
                        case 7:
                                if (TablesBitMap[i] == '0')
                                {
                                        printf("The
Item table is missing or damaged.\n");
                                        ExitFlag = 1;
                                }
                                break;
                        case 8:
                                if (TablesBitMap[i] == '0')
                                {
                                        printf("The
Stock table is missing or damaged.\n");
                                        ExitFlag = 1;
                                }
                                break;
                        }

                // if one or more tables are missing, display
message and exit the loader
                if (ExitFlag = 1)
                {
                        printf("\nExiting TPC-C Loader!\n");
                        printf("\nCheck %s\\ directory for
database\n", LogBase);
                        printf("or table creation errors.\n");

                        // cleanup database connections and
handles

SQLFreeHandle(SQL_HANDLE_STMT,v_hstmt);
                        SQLDisconnect(v_hdbc);

SQLFreeHandle(SQL_HANDLE_DBC,v_hdbc);

                        exit(1);
                }
        }

        // cleanup database connections and handles
        SQLFreeHandle(SQL_HANDLE_STMT,v_hstmt);
        SQLDisconnect(v_hdbc);
        SQLFreeHandle(SQL_HANDLE_DBC,v_hdbc);

        return;
}
```

tpccldr.mak

```
# Microsoft Developer Studio Generated NMAKE File, Format
Version 4.10
# ** DO NOT EDIT **

# TARGTYPE "Win32 (x86) Console Application" 0x0103

!IF "$(CFG)" == ""
CFG=tpccldr - Win32 Debug
!MESSAGE No configuration specified.  Defaulting to tpccldr - Win32
Debug.
!ENDIF

!IF "$(CFG)" != "tpccldr - Win32 Release" && "$(CFG)" !=\
 "tpccldr - Win32 Debug"
!MESSAGE Invalid configuration "$(CFG)" specified.
!MESSAGE You can specify a configuration when running NMAKE
on this makefile
!MESSAGE by defining the macro CFG on the command line.  For
example:
!MESSAGE
!MESSAGE NMAKE /f "tpccldr.mak" CFG="tpccldr - Win32 Debug"
!MESSAGE
!MESSAGE Possible choices for configuration are:
```

```
!MESSAGE
!MESSAGE "tpccldr - Win32 Release" (based on "Win32 (x86)
Console Application")
!MESSAGE "tpccldr - Win32 Debug" (based on "Win32 (x86)
Console Application")
!MESSAGE
!ERROR An invalid configuration is specified.
!ENDIF

!IF "$(OS)" == "Windows_NT"
NULL=
!ELSE
NULL=nul
!ENDIF
################################################################
#####################
# Begin Project
# PROP Target_Last_Scanned "tpccldr - Win32 Debug"
RSC=rc.exe
CPP=cl.exe

!IF  "$(CFG)" == "tpccldr - Win32 Release"

# PROP BASE Use_MFC 0
# PROP BASE Use_Debug_Libraries 0
# PROP BASE Output_Dir "Release"
# PROP BASE Intermediate_Dir "Release"
# PROP BASE Target_Dir ""
# PROP Use_MFC 0
# PROP Use_Debug_Libraries 0
# PROP Output_Dir "bin"
# PROP Intermediate_Dir "objects"
# PROP Target_Dir ""
OUTDIR=.\bin
INTDIR=.\objects

ALL : "$(OUTDIR)\tpccldr.exe"

CLEAN :
	-@erase "$(INTDIR)\getargs.obj"
	-@erase "$(INTDIR)\random.obj"
	-@erase "$(INTDIR)\strings.obj"
	-@erase "$(INTDIR)\time.obj"
	-@erase "$(INTDIR)\tpccldr.obj"
	-@erase "$(OUTDIR)\tpccldr.exe"

"$(OUTDIR)" :
    if not exist "$(OUTDIR)/$(NULL)" mkdir "$(OUTDIR)"

"$(INTDIR)" :
    if not exist "$(INTDIR)/$(NULL)" mkdir "$(INTDIR)"

# ADD BASE CPP /nologo /W3 /GX /O2 /D "WIN32" /D "NDEBUG"
/D "_CONSOLE" /YX /c
# ADD CPP /nologo /MT /W3 /GX /O2 /I "c:\mssql\dblib\include" /D
"NDEBUG" /D "WIN32" /D "_CONSOLE" /D "DBNTWIN32" /c
# SUBTRACT CPP /YX
CPP_PROJ=/nologo /MT /W3 /GX /O2 /I "c:\mssql\dblib\include" /D
"NDEBUG" /D\
 "WIN32" /D "_CONSOLE" /D "DBNTWIN32" /Fo"$(INTDIR)/" /c
CPP_OBJS=.\objects/
CPP_SBRS=.\.
# ADD BASE RSC /l 0x409 /d "NDEBUG"
# ADD RSC /l 0x409 /d "NDEBUG"
BSC32=bscmake.exe
# ADD BASE BSC32 /nologo
# ADD BSC32 /nologo
BSC32_FLAGS=/nologo /o"$(OUTDIR)/tpccldr.bsc"
BSC32_SBRS= \

LINK32=link.exe
# ADD BASE LINK32 kernel32.lib user32.lib gdi32.lib winspool.lib
comdlg32.lib advapi32.lib shell32.lib ole32.lib oleaut32.lib uuid.lib
odbc32.lib odbccp32.lib /nologo /subsystem:console /machine:I386
# ADD LINK32 c:\mssql\dblib\lib\ntwdblib.lib kernel32.lib user32.lib
gdi32.lib winspool.lib comdlg32.lib advapi32.lib shell32.lib ole32.lib
oleaut32.lib uuid.lib odbc32.lib odbccp32.lib /nologo
/subsystem:console /pdb:none /machine:I386
LINK32_FLAGS=c:\mssql\dblib\lib\ntwdblib.lib kernel32.lib
user32.lib gdi32.lib\
 winspool.lib comdlg32.lib advapi32.lib shell32.lib ole32.lib
oleaut32.lib\
 uuid.lib odbc32.lib odbccp32.lib /nologo /subsystem:console
/pdb:none\
 /machine:I386 /out:"$(OUTDIR)/tpccldr.exe"
LINK32_OBJS= \
	"$(INTDIR)\getargs.obj" \
	"$(INTDIR)\random.obj" \
	"$(INTDIR)\strings.obj" \
	"$(INTDIR)\time.obj" \
	"$(INTDIR)\tpccldr.obj"

"$(OUTDIR)\tpccldr.exe" : "$(OUTDIR)" $(DEF_FILE)
$(LINK32_OBJS)
    $(LINK32) @<<
  $(LINK32_FLAGS) $(LINK32_OBJS)
<<

!ELSEIF  "$(CFG)" == "tpccldr - Win32 Debug"

# PROP BASE Use_MFC 0
# PROP BASE Use_Debug_Libraries 1
# PROP BASE Output_Dir "Debug"
# PROP BASE Intermediate_Dir "Debug"
# PROP BASE Target_Dir ""
# PROP Use_MFC 0
# PROP Use_Debug_Libraries 1
# PROP Output_Dir "bin"
# PROP Intermediate_Dir "objects"
# PROP Target_Dir ""
OUTDIR=.\bin
INTDIR=.\objects

ALL : "$(OUTDIR)\tpccldr.exe"

CLEAN :
	-@erase "$(INTDIR)\getargs.obj"
	-@erase "$(INTDIR)\random.obj"
	-@erase "$(INTDIR)\strings.obj"
	-@erase "$(INTDIR)\time.obj"
	-@erase "$(INTDIR)\tpccldr.obj"
	-@erase "$(INTDIR)\vc40.idb"
	-@erase "$(INTDIR)\vc40.pdb"
	-@erase "$(OUTDIR)\tpccldr.exe"

"$(OUTDIR)" :
    if not exist "$(OUTDIR)/$(NULL)" mkdir "$(OUTDIR)"

"$(INTDIR)" :
    if not exist "$(INTDIR)/$(NULL)" mkdir "$(INTDIR)"

# ADD BASE CPP /nologo /W3 /Gm /GX /Zi /Od /D "WIN32" /D
"_DEBUG" /D "_CONSOLE" /YX /c
# ADD CPP /nologo /MTd /W3 /Gm /GX /Zi /Od /I
"c:\mssql\dblib\include" /D "_DEBUG" /D "WIN32" /D "_CONSOLE"
/D "DBNTWIN32" /c
```

```
# SUBTRACT CPP /YX
CPP_PROJ=/nologo /MTd /W3 /Gm /GX /Zi /Od /I
"c:\mssql\dblib\include" /D\
 "_DEBUG" /D "WIN32" /D "_CONSOLE" /D "DBNTWIN32"
/Fo"$(INTDIR)/"\
 /Fd"$(INTDIR)/" /c
CPP_OBJS=.\objects/
CPP_SBRS=.\.
# ADD BASE RSC /l 0x409 /d "_DEBUG"
# ADD RSC /l 0x409 /d "_DEBUG"
BSC32=bscmake.exe
# ADD BASE BSC32 /nologo
# ADD BSC32 /nologo
BSC32_FLAGS=/nologo /o"$(OUTDIR)/tpccldr.bsc"
BSC32_SBRS= \

LINK32=link.exe
# ADD BASE LINK32 kernel32.lib user32.lib gdi32.lib winspool.lib
comdlg32.lib advapi32.lib shell32.lib ole32.lib oleaut32.lib uuid.lib
odbc32.lib odbccp32.lib /nologo /subsystem:console /debug
/machine:I386
# ADD LINK32 c:\mssql\dblib\lib\ntwdblib.lib kernel32.lib user32.lib
gdi32.lib winspool.lib comdlg32.lib advapi32.lib shell32.lib ole32.lib
oleaut32.lib uuid.lib odbc32.lib odbccp32.lib /nologo
/subsystem:console /pdb:none /debug /machine:I386
LINK32_FLAGS=c:\mssql\dblib\lib\ntwdblib.lib kernel32.lib
user32.lib gdi32.lib\
 winspool.lib comdlg32.lib advapi32.lib shell32.lib ole32.lib
oleaut32.lib\
 uuid.lib odbc32.lib odbccp32.lib /nologo /subsystem:console
/pdb:none /debug\
 /machine:I386 /out:"$(OUTDIR)/tpccldr.exe"
LINK32_OBJS= \
                "$(INTDIR)\getargs.obj" \
                "$(INTDIR)\random.obj" \
                "$(INTDIR)\strings.obj" \
                "$(INTDIR)\time.obj" \
                "$(INTDIR)\tpccldr.obj"

"$(OUTDIR)\tpccldr.exe" : "$(OUTDIR)" $(DEF_FILE)
$(LINK32_OBJS)
    $(LINK32) @<<
  $(LINK32_FLAGS) $(LINK32_OBJS)
<<

!ENDIF

.c{$(CPP_OBJS)}.obj:
   $(CPP) $(CPP_PROJ) $<

.cpp{$(CPP_OBJS)}.obj:
   $(CPP) $(CPP_PROJ) $<

.cxx{$(CPP_OBJS)}.obj:
   $(CPP) $(CPP_PROJ) $<

.c{$(CPP_SBRS)}.sbr:
   $(CPP) $(CPP_PROJ) $<

.cpp{$(CPP_SBRS)}.sbr:
   $(CPP) $(CPP_PROJ) $<

.cxx{$(CPP_SBRS)}.sbr:
   $(CPP) $(CPP_PROJ) $<

################################################################
########################
# Begin Target

# Name "tpccldr - Win32 Release"
# Name "tpccldr - Win32 Debug"

!IF  "$(CFG)" == "tpccldr - Win32 Release"

!ELSEIF  "$(CFG)" == "tpccldr - Win32 Debug"

!ENDIF

################################################################
########################
# Begin Source File

SOURCE=.\src\random.c
DEP_CPP_RANDO=\
                ".\src\tpcc.h"\
                "\mssql\dblib\include\sqldb.h"\
                "\mssql\dblib\include\sqlfront.h"\


"$(INTDIR)\random.obj" : $(SOURCE) $(DEP_CPP_RANDO)
"$(INTDIR)"
   $(CPP) $(CPP_PROJ) $(SOURCE)


# End Source File
################################################################
########################
# Begin Source File

SOURCE=.\src\strings.c
DEP_CPP_STRIN=\
                ".\src\tpcc.h"\
                "\mssql\dblib\include\sqldb.h"\
                "\mssql\dblib\include\sqlfront.h"\


"$(INTDIR)\strings.obj" : $(SOURCE) $(DEP_CPP_STRIN)
"$(INTDIR)"
   $(CPP) $(CPP_PROJ) $(SOURCE)


# End Source File
################################################################
########################
# Begin Source File

SOURCE=.\src\time.c
DEP_CPP_TIME_=\
                ".\src\tpcc.h"\
                "\mssql\dblib\include\sqldb.h"\
                "\mssql\dblib\include\sqlfront.h"\


"$(INTDIR)\time.obj" : $(SOURCE) $(DEP_CPP_TIME_)
"$(INTDIR)"
   $(CPP) $(CPP_PROJ) $(SOURCE)


# End Source File
################################################################
########################
# Begin Source File

SOURCE=.\src\tpccldr.c
DEP_CPP_TPCCL=\
                ".\src\tpcc.h"\
```

```
		"\mssql\dblib\include\sqldb.h"\
		"\mssql\dblib\include\sqlfront.h"\


"$(INTDIR)\tpccldr.obj" : $(SOURCE) $(DEP_CPP_TPCCL)
"$(INTDIR)"
  $(CPP) $(CPP_PROJ) $(SOURCE)


# End Source File
################################################################
#######################
# Begin Source File

SOURCE=.\src\getargs.c
DEP_CPP_GETAR=\
		".\src\tpcc.h"\
		"\mssql\dblib\include\sqldb.h"\
		"\mssql\dblib\include\sqlfront.h"\


"$(INTDIR)\getargs.obj" : $(SOURCE) $(DEP_CPP_GETAR)
"$(INTDIR)"
  $(CPP) $(CPP_PROJ) $(SOURCE)


# End Source File
# End Target
# End Project
################################################################
#######################
```

Appendix C: Tunable Parameters

Database Startup Parameters

Microsoft SQL Server 2000 Startup Parameters

c:\Program Files\Microsoft SQL Server\MSSQL\Binn\sqlservr.exe -c -x -t3502 -g800

Where:

-c Start SQL Server independent of the Service Control Manager
-x Disable the keeping of CPU time and cache hit ratio statistics
-t3502 Writes a message to the SQL Server Errorlog showing the beginning and ending time of each checkpoint
-g800 Specifies the amount of memory that is set aside for allocations not from the buffer pool

Database Information

```
1> 2> 3> 4> 5> 6> 7> 8> 9> 10> 11>
--  File:     VERSION.SQL
--            Microsoft TPC-C Benchmark Kit Ver. 4.30
--            Copyright Microsoft, 2000
--  Purpose:  Returns SQL Server version string



print ' '
select convert(char(30), getdate(),21)
print ' '

 ------------------------------
 2001-03-19 12:39:54.107

(1 row affected)

1> 2> 3> 4> 5> Server Name:

print 'Server Name:'
select @@servername
print ' '


 -------------------------------------------------------------------------------
              ------------------------------------------------
 SGNODE01


(1 row affected)

1> 2> 3> 4> 5> Server Version:

print 'Server Version:'
select @@version
print ' '




 -------------------------------------------------------------------------------
              -------------------------------------------------------------------------------
              ---------------------------------------------------------------------------
              ---------------------------------------------------------------------------
              ---------
 Microsoft SQL Server  2000 - 8.00.208 (Intel X86)
              Sep 27 2000 14:06:38
              Cop
              yright (c) 1988-2000 Microsoft Corporation
              Enterprise Edition on Windo
              ws NT 5.0 (Build 2195: Service Pack 1)



(1 row affected)

1> 2>
1> 2> 3> 4> 5> 6> 7> 8> 9> 10>
--  File:     CONFIG.SQL
--            Microsoft TPC-C Benchmark Kit Ver. 4.30
--            Copyright Microsoft, 2000
--  Purpose:  Collects SQL Server configuration parameters


print ' '
select convert(char(30), getdate(),21)
print ' '

 ------------------------------
 2001-03-19 12:39:54.590

(1 row affected)

1> 2> 3> DBCC execution completed. If DBCC printed error
messages, contact your system administrator.
Configuration option 'show advanced options' changed from 1 to 1.
Run the RECONFIGURE statement to install.

sp_configure 'show advanced',1
1> 2> reconfigure with override
1> 2> sp_configure
 name                                minimum     maximum     config_value
run_value
 ----------------------------------- ----------- ----------- ------------ -----------
 affinity mask                                 0  2147483647          255         255
 allow updates                                 0           1            0           0
 awe enabled                                   0           1            1           1
 c2 audit mode                                 0           1            0           0
 cost threshold for parallelism                0       32767            5           5
 cursor threshold                             -1  2147483647           -1          -1
 default full-text language                    0  2147483647         1033
1033
 default language                              0        9999            0           0
 fill factor (%)                               0         100            0           0
 index create memory (KB)                    704  2147483647            0
  0
 lightweight pooling                           0           1            0           0
 locks                                      5000  2147483647            0           0
 max degree of parallelism                     0          32            0           0
 max server memory (MB)                        4  2147483647   2147483647
2147483647
 max text repl size (B)                        0  2147483647        65536
65536
 max worker threads                           32       32767          550         550
 media retention                               0         365            0           0
 min memory per query (KB)                   512  2147483647         1024
    1024
 min server memory (MB)                        0  2147483647            0
0
```

```
nested triggers                 0          1          1          1
network packet size (B)       512      65536       4096
4096
open objects                    0 2147483647          0          0
priority boost                  0          1          1          1
query governor cost limit       0 2147483647          0          0

query wait (s)                 -1 2147483647         -1         -1
recovery interval (min)         0      32767         56         56
remote access                   0          1          1          1
remote login timeout (s)        0 2147483647          0          0

remote proc trans               0          1          0          0
remote query timeout (s)        0 2147483647          0          0

scan for startup procs          0          1          0          0
set working set size            0          1          0          0
show advanced options           0          1          1          1
two digit year cutoff        1753       9999       2049       2049

user connections                0      32767          0          0
user options                    0      32767          0          0

1>
```

Software Update

Software Update

SQL Server QFE 208 was applied to all 4 server nodes and is available.
Windows 2000 SP1 was applied to all 4 server nodes and is available.

Microsoft Windows 2000 Datacenter Configuration

boot.ini

```
[boot loader]
timeout=5
default=multi(0)disk(0)rdisk(0)partition(1)\WINNT
[operating systems]
multi(0)disk(0)rdisk(0)partition(1)\WINNT="Microsoft Windows
2000 Datacenter Server /PAE" /fastdetect /PAE
multi(0)disk(0)rdisk(0)partition(1)\WINNT="Microsoft Windows
2000 Datacenter Server" /fastdetect
```

Enabling AWE

The following procedure was used on each node to enable SQL Server access to AWE memory:

1) Ran gpedit.msc to open the Group Policy Editor window.
2) Selected Computer Configuration -> Windows Settings -> Security Settings -> Local Policies -> User Rights Assignment.
3) Double-clocked on Lock Pages in Memory in the right hand pane of the editor.
4) Clicked Add.
5) Selected the Administrators group.
6) Click OK to set the local security policy setting.
7) Click OK to return to the Group Policy Editor.
8) Close the editor. Reboot the node.

Enabling VIA

The following procedure was used on each node to enable VIA support for SQL Server:

1) Open the SQL Client Network Utility.
2) Enable VIA as a protocol.
3) Select the Alias page. Press the Add button.
4) Check the VIA radio button.
5) Create a server alias.
6) Close the SQL Client Network Utility.
7) Open the SQL Server Network Utility.
8) Add VIA to the list of enabled protocols.
9) Close the SQL Server Network Utility.

System Information Report for Server Nodes

This hardware configuration inventory was obtained from 1 of 4 nodes.

All 4 nodes are identically configured.

System Information report written at: 03/14/2001 08:00:13 AM
[System Information]

[Following are sub-categories of this main category]

[System Summary]

```
Item          Value
OS Name       Microsoft Windows 2000 Datacenter Server
Version       5.0.2195 Service Pack 1 Build 2195
OS Manufacturer       Microsoft Corporation
System Name           SGNODE01
System Manufacturer IBM
System Model          IBM Server -[8681]-
System Type           X86-based PC
Processor   x86 Family 6 Model 10 Stepping 4 GenuineIntel ~900 Mhz
Processor   x86 Family 6 Model 10 Stepping 4 GenuineIntel ~900 Mhz
Processor   x86 Family 6 Model 10 Stepping 4 GenuineIntel ~900 Mhz
Processor   x86 Family 6 Model 10 Stepping 4 GenuineIntel ~900 Mhz
Processor   x86 Family 6 Model 10 Stepping 4 GenuineIntel ~900 Mhz
Processor   x86 Family 6 Model 10 Stepping 4 GenuineIntel ~900 Mhz
Processor   x86 Family 6 Model 10 Stepping 4 GenuineIntel ~900 Mhz
Processor   x86 Family 6 Model 10 Stepping 4 GenuineIntel ~900 Mhz
BIOS Version          IBM BIOS Ver 6.0
Windows Directory     C:\WINNT
System Directory      C:\WINNT\System32
Boot Device           \Device\Harddisk0\Partition1
Locale        United States
User Name             SGNODE01\Administrator
Time Zone     Eastern Standard Time
Total Physical Memory           33,291,576 KB
Available Physical Memory       32,866,272 KB
Total Virtual Memory 68,305,188 KB
Available Virtual Memory        67,782,752 KB
Page File Space       35,013,612 KB
Page File   C:\pagefile.sys
```

[Hardware Resources]

[Following are sub-categories of this main category]

[Conflicts/Sharing]

Resource Device
IRQ 51 Adaptec AIC-7896/AIC-7897 PCI Ultra2 SCSI Controller
IRQ 51 Adaptec AIC-7896/AIC-7897 PCI Ultra2 SCSI Controller

[DMA]

Channel Device Status
2 Standard floppy disk controller OK
4 Direct memory access controller OK

[Forced Hardware]

Device PNP Device ID
No Forced Hardware

[I/O]

Address Range Device Status
0x0000-0x0CF7 PCI bus OK
0x0000-0x0CF7 Direct memory access controller OK
0x0D00-0x5FFF PCI bus OK
0x2000-0x20FF Other PCI Bridge Device OK
0x2180-0x218F Other PCI Bridge Device OK
0x03B0-0x03BB S3 Inc. Trio3D OK
0x03C0-0x03DF S3 Inc. Trio3D OK
0x2200-0x22FF IBM ServeRAID 4H Controller OK
0x21C0-0x21FF IBM 10/100 Ethernet Server Adapter OK
0x2300-0x23FF Adaptec AIC-7896/AIC-7897 PCI Ultra2 SCSI Controller OK
0x2400-0x24FF Adaptec AIC-7896/AIC-7897 PCI Ultra2 SCSI Controller OK
0x0A79-0x0A79 ISAPNP Read Data Port OK
0x0279-0x0279 ISAPNP Read Data Port OK
0x02F4-0x02F7 ISAPNP Read Data Port OK
0x002E-0x002F Motherboard resources OK
0x0438-0x0439 Motherboard resources OK
0x0430-0x0437 Motherboard resources OK
0x0060-0x0060 Standard 101/102-Key or Microsoft Natural PS/2 Keyboard OK
0x0064-0x0064 Standard 101/102-Key or Microsoft Natural PS/2 Keyboard OK
0x03F0-0x03F5 Standard floppy disk controller OK
0x03F7-0x03F7 Standard floppy disk controller OK
0x0378-0x037F Printer Port (LPT1) OK
0x03F8-0x03FF Communications Port (COM1) OK
0x02F8-0x02FF Communications Port (COM2) OK
0x0020-0x0021 Advanced programmable interrupt controller OK
0x00A0-0x00A1 Advanced programmable interrupt controller OK
0x0080-0x008F Direct memory access controller OK
0x00C0-0x00DF Direct memory access controller OK
0x0040-0x0043 System timer OK
0x0070-0x0073 System CMOS/real time clock OK
0x0061-0x0061 System speaker OK
0x00F0-0x00FF Numeric data processor OK
0x04D0-0x04D1 Motherboard resources OK
0x00E8-0x00EF Motherboard resources OK
0x5FF0-0x5FFF Intel(r) 82371AB/EB PCI Bus Master IDE Controller OK
0x01F0-0x01F7 Primary IDE Channel OK
0x03F6-0x03F6 Primary IDE Channel OK
0x5FC0-0x5FDF Intel 82371AB/EB PCI to USB Universal Host Controller OK
0x6000-0xAFFF PCI bus OK
0x6000-0xAFFF IBM ServeRAID 4H Controller OK
0x6100-0x61FF IBM ServeRAID 4H Controller OK
0xB000-0xCFFF PCI bus OK
0xB000-0xCFFF IBM ServeRAID 4H Controller OK
0xB100-0xB1FF IBM ServeRAID 4H Controller OK
0xD000-0xFFFF PCI bus OK
0xD000-0xFFFF IBM ServeRAID 4H Controller OK
0xD100-0xD1FF IBM ServeRAID 4H Controller OK

[IRQs]

IRQ Number Device
9 Microsoft ACPI-Compliant System
5 Other PCI Bridge Device
25 IBM ServeRAID 4H Controller
26 cLAN Host Adapter
27 IBM 10/100 Ethernet Server Adapter
51 Adaptec AIC-7896/AIC-7897 PCI Ultra2 SCSI Controller
51 Adaptec AIC-7896/AIC-7897 PCI Ultra2 SCSI Controller
1 Standard 101/102-Key or Microsoft Natural PS/2 Keyboard
12 PS/2 Compatible Mouse
6 Standard floppy disk controller
4 Communications Port (COM1)
3 Communications Port (COM2)
8 System CMOS/real time clock
13 Numeric data processor
14 Primary IDE Channel
49 Intel 82371AB/EB PCI to USB Universal Host Controller
19 IBM ServeRAID 4H Controller
20 IBM ServeRAID 4H Controller
23 IBM ServeRAID 4H Controller
24 IBM ServeRAID 4H Controller
21 IBM ServeRAID 4H Controller
22 IBM ServeRAID 4H Controller

[Memory]

Range Device Status
0xA0000-0xBFFFF PCI bus OK
0xA0000-0xBFFFF S3 Inc. Trio3D OK
0xC8000-0xDFFFF PCI bus OK
0xF0000000-0xFC1FFFFF PCI bus OK
0xFEC00000-0xFFFFFFFF PCI bus OK
0xFEC00000-0xFFFFFFFF Advanced programmable interrupt controller OK
0xFC1FFC00-0xFC1FFCFF Other PCI Bridge Device OK
0xFC1E0000-0xFC1EFFFF Other PCI Bridge Device OK
0xF8000000-0xFBFFFFFF S3 Inc. Trio3D OK
0xFC000000-0xFC0FFFFF IBM ServeRAID 4H Controller OK
0xFC1C0000-0xFC1DFFFF cLAN Host Adapter OK
0xF7E00000-0xF7FFFFFF cLAN Host Adapter OK
0xF6000000-0xF6FFFFFF cLAN Host Adapter OK
0xFC1B0000-0xFC1BFFFF cLAN Host Adapter OK
0xFC1FE000-0xFC1FEFFF IBM 10/100 Ethernet Server Adapter OK
0xFC180000-0xFC19FFFF IBM 10/100 Ethernet Server Adapter OK
0xFC1FD000-0xFC1FDFFF Adaptec AIC-7896/AIC-7897 PCI Ultra2 SCSI Controller OK
0xFC1FC000-0xFC1FCFFF Adaptec AIC-7896/AIC-7897 PCI Ultra2 SCSI Controller OK
0xFC200000-0xFD7FFFFF PCI bus OK
0xFD700000-0xFD7FFFFF IBM ServeRAID 4H Controller OK
0xFD600000-0xFD6FFFFF IBM ServeRAID 4H Controller OK
0xFD800000-0xFE1FFFFF PCI bus OK
0xFE100000-0xFE1FFFFF IBM ServeRAID 4H Controller OK
0xFE000000-0xFE0FFFFF IBM ServeRAID 4H Controller OK
0xFE200000-0xFEBFFFFF PCI bus OK
0xFEB00000-0xFEBFFFFF IBM ServeRAID 4H Controller OK
0xFEA00000-0xFEAFFFFF IBM ServeRAID 4H Controller OK

[Components]

[Following are sub-categories of this main category]

[Multimedia]

[Following are sub-categories of this main category]

[Audio Codecs]

Codec Manufacturer Description Status File Version Size Creation Date
c:\winnt\system32\iac25_32.ax Intel Corporation Indeo® audio software OK C:\WINNT\System32\IAC25_32.AX 2.05.53 195.00 KB (199,680 bytes) 7/27/2000 8:00:00 PM
c:\winnt\system32\lhacm.acm Microsoft Corporation OK C:\WINNT\System32\LHACM.ACM 4.4.3385 33.27 KB (34,064 bytes) 2/8/2001 4:08:52 PM
c:\winnt\system32\msadp32.acm Microsoft Corporation OK C:\WINNT\System32\MSADP32.ACM 5.00.2134.1 14.77 KB (15,120 bytes) 7/27/2000 8:00:00 PM
c:\winnt\system32\msg723.acm Microsoft Corporation OK C:\WINNT\System32\MSG723.ACM 4.4.3385 106.77 KB (109,328 bytes) 2/8/2001 4:08:51 PM
c:\winnt\system32\msgsm32.acm Microsoft Corporation OK C:\WINNT\System32\MSGSM32.ACM 5.00.2134.1 22.27 KB (22,800 bytes) 7/27/2000 8:00:00 PM
c:\winnt\system32\tssoft32.acm DSP GROUP, INC. OK C:\WINNT\System32\TSSOFT32.ACM 1.01 9.27 KB (9,488 bytes) 7/27/2000 8:00:00 PM
c:\winnt\system32\msg711.acm Microsoft Corporation OK C:\WINNT\System32\MSG711.ACM 5.00.2134.1 10.27 KB (10,512 bytes) 7/27/2000 8:00:00 PM
c:\winnt\system32\imaadp32.acm Microsoft Corporation OK C:\WINNT\System32\IMAADP32.ACM 5.00.2134.1 16.27 KB (16,656 bytes) 7/27/2000 8:00:00 PM

[Video Codecs]

Codec Manufacturer Description Status File Version Size Creation Date
c:\winnt\system32\ir50_32.dll Intel Corporation Indeo® video 5.10 OK C:\WINNT\System32\IR50_32.DLL R.5.10.15.2.55 737.50 KB (755,200 bytes) 7/27/2000 8:00:00 PM
c:\winnt\system32\msh261.drv Microsoft Corporation OK C:\WINNT\System32\MSH261.DRV 4.4.3385 163.77 KB (167,696 bytes) 2/8/2001 4:08:52 PM
c:\winnt\system32\msh263.drv Microsoft Corporation OK C:\WINNT\System32\MSH263.DRV 4.4.3385 252.27 KB (258,320 bytes) 2/8/2001 4:08:22 PM
c:\winnt\system32\msvidc32.dll Microsoft Corporation OK C:\WINNT\System32\MSVIDC32.DLL 5.00.2134.1 27.27 KB (27,920 bytes) 7/27/2000 8:00:00 PM
c:\winnt\system32\msrle32.dll Microsoft Corporation OK C:\WINNT\System32\MSRLE32.DLL 5.00.2134.1 10.77 KB (11,024 bytes) 7/27/2000 8:00:00 PM
c:\winnt\system32\ir32_32.dll Intel(R) Corporation OK C:\WINNT\System32\IR32_32.DLL Not Available 194.50 KB (199,168 bytes) 7/27/2000 8:00:00 PM
c:\winnt\system32\iccvid.dll Radius Inc. OK C:\WINNT\System32\ICCVID.DLL 1.10.0.6 108.00 KB (110,592 bytes) 7/27/2000 8:00:00 PM

[CD-ROM]

Item Value
Drive D:
Description CD-ROM Drive
Media Loaded False
Media Type CD-ROM
Name LG CD-ROM CRD-8400B
Manufacturer (Standard CD-ROM drives)
Status OK
Transfer Rate Not Available
SCSI Target ID 0
PNP Device ID IDE\CDROMLG_CD-ROM_CRD-8400B_____1.08____\4249204D393932303830202020202020202020

[Sound Device]

Item Value
No sound devices

[Display]

Item Value
Name S3 Inc. Trio3D
PNP Device ID PCI\VEN_5333&DEV_8904&SUBSYS_00DB1014&REV_01\3&267A616A&0&20
Adapter Type S3 Trio3D, S3 compatible
Adapter Description S3 Inc. Trio3D
Adapter RAM 4.00 MB (4,194,304 bytes)
Installed Drivers s3mt3d.sys
Driver Version 5.01.526.0007
INF File s3trio3d.inf (S3Inc section)
Color Planes 1
Color Table Entries 65536
Resolution 800 x 600 x 60 hertz
Bits/Pixel 16

[Infrared]

Item Value
No infrared devices

[Input]

[Following are sub-categories of this main category]

[Keyboard]

Item Value
Description Standard 101/102-Key or Microsoft Natural PS/2 Keyboard
Name Enhanced (101- or 102-key)
Layout 00000409
PNP Device ID ACPI\PNP0303\4&43B47AD&0
NumberOfFunctionKeys 12

[Pointing Device]

Item Value
Hardware Type PS/2 Compatible Mouse
Number of Buttons 3
Status OK
PNP Device ID ACPI\PNP0F13\4&43B47AD&0
Power Management Supported False
Double Click Threshold 6
Handedness Right Handed Operation

[Modem]

Item Value
No modems

[Network]

[Following are sub-categories of this main category]

[Adapter]

Item Value
Name [00000000] RAS Async Adapter
Adapter Type Not Available
Product Name RAS Async Adapter
Installed True
PNP Device ID Not Available
Last Reset 3/12/2001 6:29:18 AM
Index 0
Service Name AsyncMac
IP Address Not Available
IP Subnet Not Available
Default IP Gateway Not Available
DHCP Enabled False
DHCP Server Not Available
DHCP Lease Expires Not Available
DHCP Lease Obtained Not Available
MAC Address Not Available
Service Name Not Available

Name [00000001] WAN Miniport (L2TP)
Adapter Type Not Available
Product Name WAN Miniport (L2TP)
Installed True
PNP Device ID ROOT\MS_L2TPMINIPORT\0000
Last Reset 3/12/2001 6:29:18 AM
Index 1
Service Name Rasl2tp
IP Address Not Available
IP Subnet Not Available
Default IP Gateway Not Available
DHCP Enabled False
DHCP Server Not Available
DHCP Lease Expires Not Available
DHCP Lease Obtained Not Available
MAC Address Not Available
Service Name Rasl2tp
Driver c:\winnt\system32\drivers\rasl2tp.sys (50320, 5.00.2179.1)

Name [00000002] WAN Miniport (PPTP)
Adapter Type Wide Area Network (WAN)
Product Name WAN Miniport (PPTP)
Installed True
PNP Device ID ROOT\MS_PPTPMINIPORT\0000
Last Reset 3/12/2001 6:29:18 AM
Index 2
Service Name PptpMiniport
IP Address Not Available
IP Subnet Not Available
Default IP Gateway Not Available
DHCP Enabled False
DHCP Server Not Available
DHCP Lease Expires Not Available
DHCP Lease Obtained Not Available
MAC Address 50:50:54:50:30:30
Service Name PptpMiniport
Driver c:\winnt\system32\drivers\raspptp.sys (47376, 5.00.2160.1)

Name [00000003] Direct Parallel
Adapter Type Not Available
Product Name Direct Parallel
Installed True
PNP Device ID ROOT\MS_PTIMINIPORT\0000
Last Reset 3/12/2001 6:29:18 AM
Index 3
Service Name Raspti
IP Address Not Available
IP Subnet Not Available
Default IP Gateway Not Available
DHCP Enabled False
DHCP Server Not Available
DHCP Lease Expires Not Available
DHCP Lease Obtained Not Available
MAC Address Not Available
Service Name Raspti
Driver c:\winnt\system32\drivers\raspti.sys (16880, 5.00.2146.1)

Name [00000004] WAN Miniport (IP)
Adapter Type Not Available
Product Name WAN Miniport (IP)
Installed True
PNP Device ID ROOT\MS_NDISWANIP\0000
Last Reset 3/12/2001 6:29:18 AM
Index 4
Service Name NdisWan
IP Address Not Available
IP Subnet Not Available
Default IP Gateway Not Available
DHCP Enabled False
DHCP Server Not Available
DHCP Lease Expires Not Available
DHCP Lease Obtained Not Available
MAC Address Not Available
Service Name NdisWan
Driver c:\winnt\system32\drivers\ndiswan.sys (89808, 5.00.2184.1)

Name [00000005] IBM 10/100 Ethernet Server Adapter
Adapter Type Ethernet 802.3
Product Name IBM 10/100 Ethernet Server Adapter
Installed True
PNP Device ID PCI\VEN_8086&DEV_1229&SUBSYS_01F11014&REV_0C\3&267A616A&0&60
Last Reset 3/12/2001 6:29:18 AM
Index 5
Service Name E100B
IP Address 192.168.125.201
IP Subnet 255.255.255.0
Default IP Gateway Not Available
DHCP Enabled False
DHCP Server Not Available
DHCP Lease Expires Not Available
DHCP Lease Obtained Not Available
MAC Address 00:03:47:0A:6A:CA
Service Name E100B
IRQ Number 27
I/O Port 0x21C0-0x21FF
Driver c:\winnt\system32\drivers\e100bnt5.sys (119056, 5.40.11.0000)

Name [00000006] cLAN Host Adapter
Adapter Type Ethernet 802.3
Product Name cLAN Host Adapter

Installed True
PNP Device ID
PCI\VEN_135B&DEV_0001&SUBSYS_00000000&REV_00\3&267A616A&0&58
Last Reset 3/12/2001 6:29:18 AM
Index 6
Service Name GNINDIS
IP Address 192.168.120.1
IP Subnet 255.255.255.0
Default IP Gateway Not Available
DHCP Enabled False
DHCP Server Not Available
DHCP Lease Expires Not Available
DHCP Lease Obtained Not Available
MAC Address 00:90:FA:00:1B:18
Service Name GNINDIS
IRQ Number 26
Driver c:\winnt\system32\drivers\gnindis.sys (22598, 4.1.1)

[Protocol]

Item Value
Name MSAFD Tcpip [TCP/IP]
ConnectionlessService False
GuaranteesDelivery True
GuaranteesSequencing True
MaximumAddressSize 16 bytes
MaximumMessageSize 0 bytes
MessageOriented False
MinimumAddressSize 16 bytes
PseudoStreamOriented False
SupportsBroadcasting False
SupportsConnectData False
SupportsDisconnectData False
SupportsEncryption False
SupportsExpeditedData True
SupportsGracefulClosing True
SupportsGuaranteedBandwidth False
SupportsMulticasting False

Name MSAFD Tcpip [UDP/IP]
ConnectionlessService True
GuaranteesDelivery False
GuaranteesSequencing False
MaximumAddressSize 16 bytes
MaximumMessageSize 65467 bytes
MessageOriented True
MinimumAddressSize 16 bytes
PseudoStreamOriented False
SupportsBroadcasting True
SupportsConnectData False
SupportsDisconnectData False
SupportsEncryption False
SupportsExpeditedData False
SupportsGracefulClosing False
SupportsGuaranteedBandwidth False
SupportsMulticasting True

Name RSVP UDP Service Provider
ConnectionlessService True
GuaranteesDelivery False
GuaranteesSequencing False
MaximumAddressSize 16 bytes
MaximumMessageSize 65467 bytes
MessageOriented True
MinimumAddressSize 16 bytes
PseudoStreamOriented False
SupportsBroadcasting True
SupportsConnectData False
SupportsDisconnectData False
SupportsEncryption True
SupportsExpeditedData False
SupportsGracefulClosing False
SupportsGuaranteedBandwidth False
SupportsMulticasting True

Name RSVP TCP Service Provider
ConnectionlessService False
GuaranteesDelivery True
GuaranteesSequencing True
MaximumAddressSize 16 bytes
MaximumMessageSize 0 bytes
MessageOriented False
MinimumAddressSize 16 bytes
PseudoStreamOriented False
SupportsBroadcasting False
SupportsConnectData False
SupportsDisconnectData False
SupportsEncryption True
SupportsExpeditedData True
SupportsGracefulClosing True
SupportsGuaranteedBandwidth False
SupportsMulticasting False

Name MSAFD NetBIOS

[\Device\NetBT_Tcpip_{D2A2954E-53B0-4242-8EBA-3AD3DDDA9E08}] SEQPACKET 3
ConnectionlessService False
GuaranteesDelivery True
GuaranteesSequencing True
MaximumAddressSize 20 bytes
MaximumMessageSize 64000 bytes
MessageOriented True
MinimumAddressSize 20 bytes
PseudoStreamOriented False
SupportsBroadcasting False
SupportsConnectData False
SupportsDisconnectData False
SupportsEncryption False
SupportsExpeditedData False
SupportsGracefulClosing False
SupportsGuaranteedBandwidth False
SupportsMulticasting False

Name MSAFD NetBIOS

[\Device\NetBT_Tcpip_{D2A2954E-53B0-4242-8EBA-3AD3DDDA9E08}] DATAGRAM 3
ConnectionlessService True
GuaranteesDelivery False
GuaranteesSequencing False
MaximumAddressSize 20 bytes
MaximumMessageSize 64000 bytes
MessageOriented True
MinimumAddressSize 20 bytes
PseudoStreamOriented False
SupportsBroadcasting True
SupportsConnectData False
SupportsDisconnectData False
SupportsEncryption False
SupportsExpeditedData False
SupportsGracefulClosing False
SupportsGuaranteedBandwidth False
SupportsMulticasting False

Name MSAFD NetBIOS

[\Device\NetBT_Tcpip_{CBD78306-A3A1-4444-B08A-916C948A2B49}] SEQPACKET 0
ConnectionlessService False
GuaranteesDelivery True
GuaranteesSequencing True
MaximumAddressSize 20 bytes
MaximumMessageSize 64000 bytes
MessageOriented True
MinimumAddressSize 20 bytes
PseudoStreamOriented False
SupportsBroadcasting False
SupportsConnectData False
SupportsDisconnectData False
SupportsEncryption False
SupportsExpeditedData False
SupportsGracefulClosing False
SupportsGuaranteedBandwidth False
SupportsMulticasting False

Name MSAFD NetBIOS

[\Device\NetBT_Tcpip_{CBD78306-A3A1-4444-B08A-916C948A2B49}] DATAGRAM 0
ConnectionlessService True
GuaranteesDelivery False
GuaranteesSequencing False
MaximumAddressSize 20 bytes
MaximumMessageSize 64000 bytes
MessageOriented True
MinimumAddressSize 20 bytes
PseudoStreamOriented False
SupportsBroadcasting True
SupportsConnectData False
SupportsDisconnectData False
SupportsEncryption False
SupportsExpeditedData False
SupportsGracefulClosing False
SupportsGuaranteedBandwidth False
SupportsMulticasting False

Name MSAFD NetBIOS

[\Device\NetBT_Tcpip_{6F39C5C3-FA2B-4B96-8C5C-24070D7B7CB2}] SEQPACKET 1
ConnectionlessService False
GuaranteesDelivery True
GuaranteesSequencing True
MaximumAddressSize 20 bytes
MaximumMessageSize 64000 bytes
MessageOriented True
MinimumAddressSize 20 bytes
PseudoStreamOriented False
SupportsBroadcasting False
SupportsConnectData False
SupportsDisconnectData False
SupportsEncryption False
SupportsExpeditedData False
SupportsGracefulClosing False
SupportsGuaranteedBandwidth False
SupportsMulticasting False

Name MSAFD NetBIOS

[\Device\NetBT_Tcpip_{6F39C5C3-FA2B-4B96-8C5C-24070D7B7CB2}] DATAGRAM 1
ConnectionlessService True
GuaranteesDelivery False
GuaranteesSequencing False
MaximumAddressSize 20 bytes
MaximumMessageSize 64000 bytes
MessageOriented True
MinimumAddressSize 20 bytes
PseudoStreamOriented False
SupportsBroadcasting True
SupportsConnectData False
SupportsDisconnectData False
SupportsEncryption False
SupportsExpeditedData False
SupportsGracefulClosing False
SupportsGuaranteedBandwidth False
SupportsMulticasting False

Name MSAFD NetBIOS

[\Device\NetBT_Tcpip_{F409C2C7-7706-4373-94CC-4422E208FE86}] SEQPACKET 2
ConnectionlessService False
GuaranteesDelivery True
GuaranteesSequencing True
MaximumAddressSize 20 bytes
MaximumMessageSize 64000 bytes
MessageOriented True
MinimumAddressSize 20 bytes
PseudoStreamOriented False
SupportsBroadcasting False
SupportsConnectData False
SupportsDisconnectData False
SupportsEncryption False
SupportsExpeditedData False
SupportsGracefulClosing False
SupportsGuaranteedBandwidth False
SupportsMulticasting False

Name MSAFD NetBIOS

[\Device\NetBT_Tcpip_{F409C2C7-7706-4373-94CC-4422E208FE86}] DATAGRAM 2
ConnectionlessService True
GuaranteesDelivery False
GuaranteesSequencing False
MaximumAddressSize 20 bytes
MaximumMessageSize 64000 bytes
MessageOriented True
MinimumAddressSize 20 bytes
PseudoStreamOriented False
SupportsBroadcasting True
SupportsConnectData False
SupportsDisconnectData False
SupportsEncryption False
SupportsExpeditedData False
SupportsGracefulClosing False
SupportsGuaranteedBandwidth False
SupportsMulticasting False

[WinSock]

Item Value
File c:\winnt\system32\winsock.dll
Version 3.10
Size 2.80 KB (2,864 bytes)

File c:\winnt\system32\wsock32.dll

Version 5.00.2195.1207
Size 21.27 KB (21,776 bytes)

[Ports]

[Following are sub-categories of this main category]

[Serial]

Item Value
Name COM1
Status OK
PNP Device ID ACPI\PNP0501\1
Maximum Input Buffer Size 0
Maximum Output Buffer Size False
Settable Baud Rate True
Settable Data Bits True
Settable Flow Control True
Settable Parity True
Settable Parity Check True
Settable Stop Bits True
Settable RLSD True
Supports RLSD True
Supports 16 Bit Mode False
Supports Special Characters False
Baud Rate 9600
Bits/Byte 8
Stop Bits 1
Parity None
Busy 0
Abort Read/Write on Error 0
Binary Mode Enabled -1
Continue XMit on XOff 0
CTS Outflow Control 0
Discard NULL Bytes 0
DSR Outflow Control 0
DSR Sensitivity 0
DTR Flow Control Type Enable
EOF Character 0
Error Replace Character 0
Error Replacement Enabled 0
Event Character 0
Parity Check Enabled 0
RTS Flow Control Type Enable
XOff Character 19
XOffXMit Threshold 512
XOn Character 17
XOnXMit Threshold 2048
XOnXOff InFlow Control 0
XOnXOff OutFlow Control 0
IRQ Number 4
I/O Port 0x03F8-0x03FF
Driver c:\winnt\system32\drivers\serial.sys (62448, 5.00.2134.1)

Name COM2
Status OK
PNP Device ID ACPI\PNP0501\2
Maximum Input Buffer Size 0
Maximum Output Buffer Size False
Settable Baud Rate True
Settable Data Bits True
Settable Flow Control True
Settable Parity True
Settable Parity Check True
Settable Stop Bits True
Settable RLSD True
Supports RLSD True
Supports 16 Bit Mode False
Supports Special Characters False
Baud Rate 9600
Bits/Byte 8
Stop Bits 1
Parity None
Busy 0
Abort Read/Write on Error 0
Binary Mode Enabled -1
Continue XMit on XOff 0
CTS Outflow Control 0
Discard NULL Bytes 0
DSR Outflow Control 0
DSR Sensitivity 0
DTR Flow Control Type Enable
EOF Character 0
Error Replace Character 0
Error Replacement Enabled 0
Event Character 0
Parity Check Enabled 0
RTS Flow Control Type Enable
XOff Character 19
XOffXMit Threshold 512
XOn Character 17
XOnXMit Threshold 2048
XOnXOff InFlow Control 0
XOnXOff OutFlow Control 0
IRQ Number 3
I/O Port 0x02F8-0x02FF
Driver c:\winnt\system32\drivers\serial.sys (62448, 5.00.2134.1)

[Parallel]

Item Value
Name LPT1
PNP Device ID ACPI\PNP0400\1

[Storage]

[Following are sub-categories of this main category]

[Drives]

Item Value
Drive A:
Description 3 1/2 Inch Floppy Drive

Drive C:
Description Local Fixed Disk
Compressed False
File System NTFS
Size 8.47 GB (9,097,424,896 bytes)
Free Space 4.76 GB (5,111,955,456 bytes)
Volume Name
Volume Serial Number C8DF6769
Partition Disk #0, Partition #0
Partition Size 8.47 GB (9,097,428,992 bytes)
Starting Offset 16384 bytes
Drive Description Disk drive
Drive Manufacturer (Standard disk drives)
Drive Model IBM ServeRAID Failover Virtual Disk Device
Drive BytesPerSector 512
Drive MediaLoaded True
Drive MediaType Fixed hard disk media
Drive Partitions 1
Drive SCSIBus 0

Drive SCSILogicalUnit 0
Drive SCSIPort 3
Drive SCSITargetId 0
Drive SectorsPerTrack 32
Drive Size 9099542528 bytes
Drive TotalCylinders 4339
Drive TotalSectors 17772544
Drive TotalTracks 555392
Drive TracksPerCylinder 128

Drive F:
Description Local Fixed Disk
Compressed Not Available
File System Not Available
Size Not Available
Free Space Not Available
Volume Name Not Available
Volume Serial Number Not Available
Partition Disk #1, Partition #0
Partition Size 101.70 GB (109,196,607,488 bytes)
Starting Offset 2097152 bytes
Drive Description Disk drive
Drive Manufacturer (Standard disk drives)
Drive Model IBM ServeRAID Failover Virtual Disk Device
Drive BytesPerSector 512
Drive MediaLoaded True
Drive MediaType Fixed hard disk media
Drive Partitions 1
Drive SCSIBus 0
Drive SCSILogicalUnit 0
Drive SCSIPort 3
Drive SCSITargetId 1
Drive SectorsPerTrack 32
Drive Size 109200801792 bytes
Drive TotalCylinders 52071
Drive TotalSectors 213282816
Drive TotalTracks 6665088
Drive TracksPerCylinder 128

Drive G:
Description Local Fixed Disk
Compressed Not Available
File System Not Available
Size Not Available
Free Space Not Available
Volume Name Not Available
Volume Serial Number Not Available
Partition Disk #2, Partition #0
Partition Size 474.59 GB (509,588,997,120 bytes)
Starting Offset 8225280 bytes
Drive Description Disk drive
Drive Manufacturer (Standard disk drives)
Drive Model IBM ServeRAID Failover Virtual Disk Device
Drive BytesPerSector 512
Drive MediaLoaded True
Drive MediaType Fixed hard disk media
Drive Partitions 3
Drive SCSIBus 0
Drive SCSILogicalUnit 0
Drive SCSIPort 4
Drive SCSITargetId 0
Drive SectorsPerTrack 63
Drive Size 509597222400 bytes
Drive TotalCylinders 61955
Drive TotalSectors 995307075
Drive TotalTracks 15798525
Drive TracksPerCylinder 255

Drive H:
Description Local Fixed Disk
Compressed Not Available
File System Not Available
Size Not Available
Free Space Not Available
Volume Name Not Available
Volume Serial Number Not Available
Partition Disk #2, Partition #0
Partition Size 474.59 GB (509,588,997,120 bytes)
Starting Offset 8225280 bytes
Drive Description Disk drive
Drive Manufacturer (Standard disk drives)
Drive Model IBM ServeRAID Failover Virtual Disk Device
Drive BytesPerSector 512
Drive MediaLoaded True
Drive MediaType Fixed hard disk media
Drive Partitions 3
Drive SCSIBus 0
Drive SCSILogicalUnit 0
Drive SCSIPort 4
Drive SCSITargetId 0
Drive SectorsPerTrack 63
Drive Size 509597222400 bytes
Drive TotalCylinders 61955
Drive TotalSectors 995307075
Drive TotalTracks 15798525
Drive TracksPerCylinder 255

Drive I:
Description Local Fixed Disk
Compressed Not Available
File System Not Available
Size Not Available
Free Space Not Available
Volume Name Not Available
Volume Serial Number Not Available
Partition Disk #3, Partition #0
Partition Size 237.29 GB (254,782,996,480 bytes)
Starting Offset 2097152 bytes
Drive Description Disk drive
Drive Manufacturer (Standard disk drives)
Drive Model IBM ServeRAID Failover Virtual Disk Device
Drive BytesPerSector 512
Drive MediaLoaded True
Drive MediaType Fixed hard disk media
Drive Partitions 2
Drive SCSIBus 0
Drive SCSILogicalUnit 0
Drive SCSIPort 5
Drive SCSITargetId 0
Drive SectorsPerTrack 32
Drive Size 254787190784 bytes
Drive TotalCylinders 121492
Drive TotalSectors 497631232
Drive TotalTracks 15550976
Drive TracksPerCylinder 128

Drive J:
Description Local Fixed Disk
Compressed Not Available
File System Not Available
Size Not Available
Free Space Not Available
Volume Name Not Available
Volume Serial Number Not Available
Partition Disk #3, Partition #0
Partition Size 237.29 GB (254,782,996,480 bytes)

Starting Offset 2097152 bytes
Drive Description Disk drive
Drive Manufacturer (Standard disk drives)
Drive Model IBM ServeRAID Failover Virtual Disk Device
Drive BytesPerSector 512
Drive MediaLoaded True
Drive MediaType Fixed hard disk media
Drive Partitions 2
Drive SCSIBus 0
Drive SCSILogicalUnit 0
Drive SCSIPort 5
Drive SCSITargetId 0
Drive SectorsPerTrack 32
Drive Size 254787190784 bytes
Drive TotalCylinders 121492
Drive TotalSectors 497631232
Drive TotalTracks 15550976
Drive TracksPerCylinder 128

Drive K:
Description Local Fixed Disk
Compressed Not Available
File System Not Available
Size Not Available
Free Space Not Available
Volume Name Not Available
Volume Serial Number Not Available
Partition Disk #4, Partition #0
Partition Size 237.27 GB (254,769,822,720 bytes)
Starting Offset 8225280 bytes
Drive Description Disk drive
Drive Manufacturer (Standard disk drives)
Drive Model IBM ServeRAID Failover Virtual Disk Device
Drive BytesPerSector 512
Drive MediaLoaded True
Drive MediaType Fixed hard disk media
Drive Partitions 3
Drive SCSIBus 0
Drive SCSILogicalUnit 0
Drive SCSIPort 6
Drive SCSITargetId 0
Drive SectorsPerTrack 63
Drive Size 254786273280 bytes
Drive TotalCylinders 30976
Drive TotalSectors 497629440
Drive TotalTracks 7898880
Drive TracksPerCylinder 255

Drive L:
Description Local Fixed Disk
Compressed Not Available
File System Not Available
Size Not Available
Free Space Not Available
Volume Name Not Available
Volume Serial Number Not Available
Partition Disk #4, Partition #0
Partition Size 237.27 GB (254,769,822,720 bytes)
Starting Offset 8225280 bytes
Drive Description Disk drive
Drive Manufacturer (Standard disk drives)
Drive Model IBM ServeRAID Failover Virtual Disk Device
Drive BytesPerSector 512
Drive MediaLoaded True
Drive MediaType Fixed hard disk media
Drive Partitions 3
Drive SCSIBus 0
Drive SCSILogicalUnit 0
Drive SCSIPort 6
Drive SCSITargetId 0
Drive SectorsPerTrack 63
Drive Size 254786273280 bytes
Drive TotalCylinders 30976
Drive TotalSectors 497629440
Drive TotalTracks 7898880
Drive TracksPerCylinder 255

Drive M:
Description Local Fixed Disk
Compressed Not Available
File System Not Available
Size Not Available
Free Space Not Available
Volume Name Not Available
Volume Serial Number Not Available
Partition Disk #5, Partition #0
Partition Size 237.29 GB (254,782,996,480 bytes)
Starting Offset 2097152 bytes
Drive Description Disk drive
Drive Manufacturer (Standard disk drives)
Drive Model IBM ServeRAID Failover Virtual Disk Device
Drive BytesPerSector 512
Drive MediaLoaded True
Drive MediaType Fixed hard disk media
Drive Partitions 3
Drive SCSIBus 0
Drive SCSILogicalUnit 0
Drive SCSIPort 7
Drive SCSITargetId 0
Drive SectorsPerTrack 32
Drive Size 254787190784 bytes
Drive TotalCylinders 121492
Drive TotalSectors 497631232
Drive TotalTracks 15550976
Drive TracksPerCylinder 128

Drive N:
Description Local Fixed Disk
Compressed Not Available
File System Not Available
Size Not Available
Free Space Not Available
Volume Name Not Available
Volume Serial Number Not Available
Partition Disk #5, Partition #0
Partition Size 237.29 GB (254,782,996,480 bytes)
Starting Offset 2097152 bytes
Drive Description Disk drive
Drive Manufacturer (Standard disk drives)
Drive Model IBM ServeRAID Failover Virtual Disk Device
Drive BytesPerSector 512
Drive MediaLoaded True
Drive MediaType Fixed hard disk media
Drive Partitions 3
Drive SCSIBus 0
Drive SCSILogicalUnit 0
Drive SCSIPort 7
Drive SCSITargetId 0
Drive SectorsPerTrack 32
Drive Size 254787190784 bytes
Drive TotalCylinders 121492
Drive TotalSectors 497631232
Drive TotalTracks 15550976
Drive TracksPerCylinder 128

Drive O:

Description Local Fixed Disk
Compressed Not Available
File System Not Available
Size Not Available
Free Space Not Available
Volume Name Not Available
Volume Serial Number Not Available
Partition Disk #6, Partition #0
Partition Size 237.29 GB (254,782,996,480 bytes)
Starting Offset 2097152 bytes
Drive Description Disk drive
Drive Manufacturer (Standard disk drives)
Drive Model IBM ServeRAID Failover Virtual Disk Device
Drive BytesPerSector 512
Drive MediaLoaded True
Drive MediaType Fixed hard disk media
Drive Partitions 3
Drive SCSIBus 0
Drive SCSILogicalUnit 0
Drive SCSIPort 8
Drive SCSITargetId 0
Drive SectorsPerTrack 32
Drive Size 254787190784 bytes
Drive TotalCylinders 121492
Drive TotalSectors 497631232
Drive TotalTracks 15550976
Drive TracksPerCylinder 128

Drive P:
Description Local Fixed Disk
Compressed Not Available
File System Not Available
Size Not Available
Free Space Not Available
Volume Name Not Available
Volume Serial Number Not Available
Partition Disk #6, Partition #0
Partition Size 237.29 GB (254,782,996,480 bytes)
Starting Offset 2097152 bytes
Drive Description Disk drive
Drive Manufacturer (Standard disk drives)
Drive Model IBM ServeRAID Failover Virtual Disk Device
Drive BytesPerSector 512
Drive MediaLoaded True
Drive MediaType Fixed hard disk media
Drive Partitions 3
Drive SCSIBus 0
Drive SCSILogicalUnit 0
Drive SCSIPort 8
Drive SCSITargetId 0
Drive SectorsPerTrack 32
Drive Size 254787190784 bytes
Drive TotalCylinders 121492
Drive TotalSectors 497631232
Drive TotalTracks 15550976
Drive TracksPerCylinder 128

Drive Q:
Description Local Fixed Disk
Compressed Not Available
File System Not Available
Size Not Available
Free Space Not Available
Volume Name Not Available
Volume Serial Number Not Available
Partition Disk #7, Partition #0
Partition Size 237.29 GB (254,782,996,480 bytes)
Starting Offset 2097152 bytes
Drive Description Disk drive
Drive Manufacturer (Standard disk drives)
Drive Model IBM ServeRAID Failover Virtual Disk Device
Drive BytesPerSector 512
Drive MediaLoaded True
Drive MediaType Fixed hard disk media
Drive Partitions 3
Drive SCSIBus 0
Drive SCSILogicalUnit 0
Drive SCSIPort 9
Drive SCSITargetId 0
Drive SectorsPerTrack 32
Drive Size 254787190784 bytes
Drive TotalCylinders 121492
Drive TotalSectors 497631232
Drive TotalTracks 15550976
Drive TracksPerCylinder 128

Drive R:
Description Local Fixed Disk
Compressed Not Available
File System Not Available
Size Not Available
Free Space Not Available
Volume Name Not Available
Volume Serial Number Not Available
Partition Disk #7, Partition #0
Partition Size 237.29 GB (254,782,996,480 bytes)
Starting Offset 2097152 bytes
Drive Description Disk drive
Drive Manufacturer (Standard disk drives)
Drive Model IBM ServeRAID Failover Virtual Disk Device
Drive BytesPerSector 512
Drive MediaLoaded True
Drive MediaType Fixed hard disk media
Drive Partitions 3
Drive SCSIBus 0
Drive SCSILogicalUnit 0
Drive SCSIPort 9
Drive SCSITargetId 0
Drive SectorsPerTrack 32
Drive Size 254787190784 bytes
Drive TotalCylinders 121492
Drive TotalSectors 497631232
Drive TotalTracks 15550976
Drive TracksPerCylinder 128

Drive S:
Description Local Fixed Disk
Compressed False
File System NTFS
Size 117.19 GB (125,829,099,520 bytes)
Free Space 24.04 GB (25,817,296,896 bytes)
Volume Name backup2_1&2
Volume Serial Number 84B7B1CA
Partition Disk #6, Partition #0
Partition Size 237.29 GB (254,782,996,480 bytes)
Starting Offset 2097152 bytes
Drive Description Disk drive
Drive Manufacturer (Standard disk drives)
Drive Model IBM ServeRAID Failover Virtual Disk Device
Drive BytesPerSector 512
Drive MediaLoaded True
Drive MediaType Fixed hard disk media
Drive Partitions 3
Drive SCSIBus 0
Drive SCSILogicalUnit 0
Drive SCSIPort 8

Drive SCSITargetId 0
Drive SectorsPerTrack 32
Drive Size 254787190784 bytes
Drive TotalCylinders 121492
Drive TotalSectors 497631232
Drive TotalTracks 15550976
Drive TracksPerCylinder 128

Drive T:
Description Local Fixed Disk
Compressed False
File System NTFS
Size 117.19 GB (125,829,099,520 bytes)
Free Space 24.04 GB (25,817,362,432 bytes)
Volume Name backup2_3&4
Volume Serial Number ACCCCC87
Partition Disk #7, Partition #0
Partition Size 237.29 GB (254,782,996,480 bytes)
Starting Offset 2097152 bytes
Drive Description Disk drive
Drive Manufacturer (Standard disk drives)
Drive Model IBM ServeRAID Failover Virtual Disk Device
Drive BytesPerSector 512
Drive MediaLoaded True
Drive MediaType Fixed hard disk media
Drive Partitions 3
Drive SCSIBus 0
Drive SCSILogicalUnit 0
Drive SCSIPort 9
Drive SCSITargetId 0
Drive SectorsPerTrack 32
Drive Size 254787190784 bytes
Drive TotalCylinders 121492
Drive TotalSectors 497631232
Drive TotalTracks 15550976
Drive TracksPerCylinder 128

Drive U:
Description Local Fixed Disk
Compressed False
File System NTFS
Size 117.19 GB (125,830,299,648 bytes)
Free Space 24.02 GB (25,792,114,688 bytes)
Volume Name backup1_1&2
Volume Serial Number 088D0CA3
Partition Disk #4, Partition #0
Partition Size 237.27 GB (254,769,822,720 bytes)
Starting Offset 8225280 bytes
Drive Description Disk drive
Drive Manufacturer (Standard disk drives)
Drive Model IBM ServeRAID Failover Virtual Disk Device
Drive BytesPerSector 512
Drive MediaLoaded True
Drive MediaType Fixed hard disk media
Drive Partitions 3
Drive SCSIBus 0
Drive SCSILogicalUnit 0
Drive SCSIPort 6
Drive SCSITargetId 0
Drive SectorsPerTrack 63
Drive Size 254786273280 bytes
Drive TotalCylinders 30976
Drive TotalSectors 497629440
Drive TotalTracks 7898880
Drive TracksPerCylinder 255

Drive V:
Description Local Fixed Disk
Compressed False
File System NTFS
Size 117.19 GB (125,829,099,520 bytes)
Free Space 24.04 GB (25,816,969,216 bytes)
Volume Name backup1_3&4
Volume Serial Number E8A224E6
Partition Disk #5, Partition #0
Partition Size 237.29 GB (254,782,996,480 bytes)
Starting Offset 2097152 bytes
Drive Description Disk drive
Drive Manufacturer (Standard disk drives)
Drive Model IBM ServeRAID Failover Virtual Disk Device
Drive BytesPerSector 512
Drive MediaLoaded True
Drive MediaType Fixed hard disk media
Drive Partitions 3
Drive SCSIBus 0
Drive SCSILogicalUnit 0
Drive SCSIPort 7
Drive SCSITargetId 0
Drive SectorsPerTrack 32
Drive Size 254787190784 bytes
Drive TotalCylinders 121492
Drive TotalSectors 497631232
Drive TotalTracks 15550976
Drive TracksPerCylinder 128

Drive W:
Description Local Fixed Disk
Compressed False
File System NTFS
Size 996.19 MB (1,044,577,280 bytes)
Free Space 476.63 MB (499,786,752 bytes)
Volume Name MSDTC
Volume Serial Number 60EEFCD6
Partition Disk #2, Partition #0
Partition Size 474.59 GB (509,588,997,120 bytes)
Starting Offset 8225280 bytes
Drive Description Disk drive
Drive Manufacturer (Standard disk drives)
Drive Model IBM ServeRAID Failover Virtual Disk Device
Drive BytesPerSector 512
Drive MediaLoaded True
Drive MediaType Fixed hard disk media
Drive Partitions 3
Drive SCSIBus 0
Drive SCSILogicalUnit 0
Drive SCSIPort 4
Drive SCSITargetId 0
Drive SectorsPerTrack 63
Drive Size 509597222400 bytes
Drive TotalCylinders 61955
Drive TotalSectors 995307075
Drive TotalTracks 15798525
Drive TracksPerCylinder 255

Drive E:
Description Network Connection
Provider Name \\192.168.125.251\e$\shogun

[SCSI]

Item Value
Name IBM ServeRAID 4H Controller
Caption IBM ServeRAID 4H Controller
Driver ipsraidn
Status OK

PNP Device ID
PCI\VEN_1014&DEV_002E&SUBSYS_022E1014&REV_10\3&267A616A&0&50
Device ID
PCI\VEN_1014&DEV_002E&SUBSYS_022E1014&REV_10\3&267A616A&0&50
Device Map Not Available
Index Not Available
Max Number Controlled Not Available
IRQ Number 25
I/O Port 0x2200-0x22FF
Driver c:\winnt\system32\drivers\ipsraidn.sys (102807, 4.70.08)

Name Adaptec AIC-7896/AIC-7897 PCI Ultra2 SCSI Controller
Caption Adaptec AIC-7896/AIC-7897 PCI Ultra2 SCSI Controller
Driver aic78u2
Status OK
PNP Device ID
PCI\VEN_9005&DEV_005F&SUBSYS_080F9005&REV_00\3&267A616A&0&70
Device ID
PCI\VEN_9005&DEV_005F&SUBSYS_080F9005&REV_00\3&267A616A&0&70
Device Map Not Available
Index Not Available
Max Number Controlled Not Available
IRQ Number 51
I/O Port 0x2300-0x23FF
Driver c:\winnt\system32\drivers\aic78u2.sys (65168, v3.00a)

Name Adaptec AIC-7896/AIC-7897 PCI Ultra2 SCSI Controller
Caption Adaptec AIC-7896/AIC-7897 PCI Ultra2 SCSI Controller
Driver aic78u2
Status OK
PNP Device ID
PCI\VEN_9005&DEV_005F&SUBSYS_080F9005&REV_00\3&267A616A&0&71
Device ID
PCI\VEN_9005&DEV_005F&SUBSYS_080F9005&REV_00\3&267A616A&0&71
Device Map Not Available
Index Not Available
Max Number Controlled Not Available
IRQ Number 51
I/O Port 0x2400-0x24FF
Driver c:\winnt\system32\drivers\aic78u2.sys (65168, v3.00a)

Name IBM ServeRAID 4H Controller
Caption IBM ServeRAID 4H Controller
Driver ipsraidn
Status OK
PNP Device ID
PCI\VEN_1014&DEV_002E&SUBSYS_022E1014&REV_10\3&172E68DD&0&20
Device ID
PCI\VEN_1014&DEV_002E&SUBSYS_022E1014&REV_10\3&172E68DD&0&20
Device Map Not Available
Index Not Available
Max Number Controlled Not Available
IRQ Number 19
I/O Port 0x6000-0xAFFF
Driver c:\winnt\system32\drivers\ipsraidn.sys (102807, 4.70.08)

Name IBM ServeRAID 4H Controller
Caption IBM ServeRAID 4H Controller
Driver ipsraidn
Status OK
PNP Device ID
PCI\VEN_1014&DEV_002E&SUBSYS_022E1014&REV_10\3&172E68DD&0&28
Device ID
PCI\VEN_1014&DEV_002E&SUBSYS_022E1014&REV_10\3&172E68DD&0&28
Device Map Not Available
Index Not Available
Max Number Controlled Not Available
IRQ Number 20
I/O Port 0x6100-0x61FF
Driver c:\winnt\system32\drivers\ipsraidn.sys (102807, 4.70.08)

Name IBM ServeRAID 4H Controller
Caption IBM ServeRAID 4H Controller
Driver ipsraidn
Status OK
PNP Device ID
PCI\VEN_1014&DEV_002E&SUBSYS_022E1014&REV_10\3&23C0707C&0&40
Device ID
PCI\VEN_1014&DEV_002E&SUBSYS_022E1014&REV_10\3&23C0707C&0&40
Device Map Not Available
Index Not Available
Max Number Controlled Not Available
IRQ Number 23
I/O Port 0xB000-0xCFFF
Driver c:\winnt\system32\drivers\ipsraidn.sys (102807, 4.70.08)

Name IBM ServeRAID 4H Controller
Caption IBM ServeRAID 4H Controller
Driver ipsraidn
Status OK
PNP Device ID
PCI\VEN_1014&DEV_002E&SUBSYS_022E1014&REV_10\3&23C0707C&0&48
Device ID
PCI\VEN_1014&DEV_002E&SUBSYS_022E1014&REV_10\3&23C0707C&0&48
Device Map Not Available
Index Not Available
Max Number Controlled Not Available
IRQ Number 24
I/O Port 0xB100-0xB1FF
Driver c:\winnt\system32\drivers\ipsraidn.sys (102807, 4.70.08)

Name IBM ServeRAID 4H Controller
Caption IBM ServeRAID 4H Controller
Driver ipsraidn
Status OK
PNP Device ID
PCI\VEN_1014&DEV_002E&SUBSYS_022E1014&REV_10\3&146CA173&0&30
Device ID
PCI\VEN_1014&DEV_002E&SUBSYS_022E1014&REV_10\3&146CA173&0&30
Device Map Not Available
Index Not Available
Max Number Controlled Not Available
IRQ Number 21
I/O Port 0xD000-0xFFFF
Driver c:\winnt\system32\drivers\ipsraidn.sys (102807, 4.70.08)

Name IBM ServeRAID 4H Controller
Caption IBM ServeRAID 4H Controller
Driver ipsraidn
Status OK

PNP Device ID
PCI\VEN_1014&DEV_002E&SUBSYS_022E1014&REV_10\3&146CA173&0&38
Device ID
PCI\VEN_1014&DEV_002E&SUBSYS_022E1014&REV_10\3&146CA173&0&38
Device Map Not Available
Index Not Available
Max Number Controlled Not Available
IRQ Number 22
I/O Port 0xD100-0xD1FF
Driver c:\winnt\system32\drivers\ipsraidn.sys (102807, 4.70.08)

Name IBM ServeRAID Failover Virtual Adapter
Caption IBM ServeRAID Failover Virtual Adapter
Driver twintail
Status OK
PNP Device ID ROOT\TWINTAIL\0000
Device ID ROOT\TWINTAIL\0000
Device Map Not Available
Index Not Available
Max Number Controlled Not Available
Driver c:\winnt\system32\drivers\twintail.sys (26032, 4.70.06)

[Printing]

Name Port Name Server Name
No printing information

[Problem Devices]

Device PNP Device ID Error Code
Other PCI Bridge Device
PCI\VEN_1014&DEV_00DC&SUBSYS_00DC1014&REV_02\3&267A616A&0&10 28
Not Available ACPI\IBM37D0\4&43B47AD&0 28

[USB]

Device PNP Device ID
Intel 82371AB/EB PCI to USB Universal Host Controller
PCI\VEN_8086&DEV_7112&SUBSYS_00000000&REV_01\3&267A616A&0&7A
USB Root Hub USB\ROOT_HUB\4&B5B4E1B&0

[Software Environment]

[Following are sub-categories of this main category]

[Drivers]

Name Description File Type Started
Start Mode State Status Error Control
Accept Pause Accept Stop
abiosdsk Abiosdsk Not Available Kernel Driver
False Disabled Stopped OK Ignore False
False
acpi Microsoft ACPI Driver
c:\winnt\system32\drivers\acpi.sys Kernel Driver
True Boot Running OK Normal False
True
acpiec ACPIEC c:\winnt\system32\drivers\acpiec.sys
Kernel Driver False Disabled Stopped OK
Normal False False
adpu160m adpu160m Not Available Kernel Driver
False Disabled Stopped OK Normal False
False
afd AFD Networking Support Environment
c:\winnt\system32\drivers\afd.sysKernel Driver True
Auto Running OK Normal False True
aic116x aic116x Not Available Kernel Driver
False Disabled Stopped OK Normal False
False
aic78u2 aic78u2 c:\winnt\system32\drivers\aic78u2.sys
Kernel Driver True Boot Running OK
Normal False True
aic78xx aic78xx Not Available Kernel Driver
False Disabled Stopped OK Normal False
False
ami0nt ami0nt Not Available Kernel Driver
False Disabled Stopped OK Normal False
False
asc asc Not Available Kernel Driver
False Disabled Stopped OK Normal False
False
asc3550 asc3550 Not Available Kernel Driver
False Disabled Stopped OK Normal False
False
asyncmac RAS Asynchronous Media Driver
c:\winnt\system32\drivers\asyncmac.sys Kernel Driver
False Manual Stopped OK Normal False
False
atapi Standard IDE/ESDI Hard Disk Controller
c:\winnt\system32\drivers\atapi.sys Kernel Driver
True Boot Running OK Normal False
True
atdisk Atdisk Not Available Kernel Driver
False Disabled Stopped OK Ignore False
False
atmarpc ATM ARP Client Protocol
c:\winnt\system32\drivers\atmarpc.sys Kernel Driver
False Manual Stopped OK Normal False
False
audstub Audio Stub Driver
c:\winnt\system32\drivers\audstub.sys Kernel Driver
True Manual Running OK Normal False
True
beep Beep c:\winnt\system32\drivers\beep.sys
Kernel Driver True System Running OK
Normal False True
cdaudio Cdaudio c:\winnt\system32\drivers\cdaudio.sys
Kernel Driver False System Stopped OK
Ignore False False
cdfs Cdfs c:\winnt\system32\drivers\cdfs.sys File
System Driver True Disabled Running OK
Normal False True
cdrom CD-ROM Driver c:\winnt\system32\drivers\cdrom.sys
Kernel Driver True System Running OK
Normal False True
changer Changer Not Available Kernel Driver
False System Stopped OK Ignore False
False
cpqarray Cpqarray Not Available Kernel Driver
False Disabled Stopped OK Normal False
False
cpqarry2 cpqarry2 Not Available Kernel Driver
False Disabled Stopped OK Normal False
False
cpqfcalm cpqfcalm Not Available Kernel Driver
False Disabled Stopped OK Normal False
False
dac960nt dac960nt Not Available Kernel Driver
False Disabled Stopped OK Normal False
False

```
deckzpsx deckzpsx Not Available Kernel Driver
False Disabled Stopped OK Normal False
False
dfsdriver DfsDriver c:\winnt\system32\drivers\dfs.sysFile System
Driver True Boot Running OK Normal
False True
disk Disk Driver c:\winnt\system32\drivers\disk.sys
Kernel Driver True Boot Running OK
Normal False True
diskperf Diskperf c:\winnt\system32\drivers\diskperf.sys
Kernel Driver False Disabled Stopped OK
Normal False False
dmboot dmboot c:\winnt\system32\drivers\dmboot.sys
Kernel Driver False Disabled Stopped OK
Normal False False
dmio Logical Disk Manager Driver
c:\winnt\system32\drivers\dmio.sys Kernel Driver
True Boot Running OK Normal False
True
dmload dmload c:\winnt\system32\drivers\dmload.sys
Kernel Driver True Boot Running OK
Normal False True
e100b Intel(R) PRO Adapter Driver
c:\winnt\system32\drivers\e100bnt5.sys Kernel Driver
True Manual Running OK Normal False
True
efs EFS c:\winnt\system32\drivers\efs.sysFile System
Driver True Disabled Running OK Normal
False True
fastfat Fastfat c:\winnt\system32\drivers\fastfat.sys File
System Driver True Disabled Running OK
Normal False True
fdc Floppy Disk Controller Driver
c:\winnt\system32\drivers\fdc.sysKernel Driver True
Manual Running OK Normal False True
fireport fireport Not Available Kernel Driver
False Disabled Stopped OK Normal False
False
flpydisk Floppy Disk Driver
c:\winnt\system32\drivers\flpydisk.sys Kernel Driver
True Manual Running OK Normal False
True
ftdisk Volume Manager Driver
c:\winnt\system32\drivers\ftdisk.sys Kernel Driver
True Boot Running OK Normal False
True
gnindis cLAN NDIS Driver c:\winnt\system32\drivers\gnindis.sys
Kernel Driver True Auto Running OK
Normal False True
gnivia cLAN VIA Driver c:\winnt\system32\drivers\gnivia.sys
Kernel Driver True Auto Running OK
Normal False True
gpc Generic Packet Classifier
c:\winnt\system32\drivers\msgpc.sys Kernel Driver
True Manual Running OK Normal False
True
i8042prt i8042 Keyboard and PS/2 Mouse Port Driver
c:\winnt\system32\drivers\i8042prt.sys Kernel Driver
True System Running OK Normal False
True
ini910u ini910u Not Available Kernel Driver
False Disabled Stopped OK Normal False
False
intelide IntelIde c:\winnt\system32\drivers\intelide.sys
Kernel Driver True Boot Running OK
Normal False True
ipfilterdriver IP Traffic Filter Driver
c:\winnt\system32\drivers\ipfltdrv.sys Kernel Driver
False Manual Stopped OK Normal False
False
ipinip IP in IP Tunnel Driverc:\winnt\system32\drivers\ipinip.sys
Kernel Driver False Manual Stopped OK
Normal False False
ipnat IP Network Address Translator
c:\winnt\system32\drivers\ipnat.sys Kernel Driver
False Manual Stopped OK Normal False
False
ipsec IPSEC driver c:\winnt\system32\drivers\ipsec.sys
Kernel Driver True Manual Running OK
Normal False True
ipsperf IBM ServeRAID Performance Driver
c:\winnt\system32\drivers\ipsperf.sys Kernel Driver
True Boot Running OK Normal False
True
ipsraidn IBM ServeRAID Device Driver
c:\winnt\system32\drivers\ipsraidn.sys Kernel Driver
True Boot Running OK Normal False
True
isapnp PnP ISA/EISA Bus Driver
c:\winnt\system32\drivers\isapnp.sys Kernel Driver
True Boot Running OK Critical False
True
kbdclass Keyboard Class Driver
c:\winnt\system32\drivers\kbdclass.sys Kernel Driver
True System Running OK Normal False
True
ksecdd KSecDD c:\winnt\system32\drivers\ksecdd.sys
Kernel Driver True Boot Running OK
Normal False True
lbrtfdc lbrtfdc Not Available Kernel Driver
False System Stopped OK Ignore False
False
lp6nds35 lp6nds35 Not Available Kernel Driver
False Disabled Stopped OK Normal False
False
mnmdd mnmdd c:\winnt\system32\drivers\mnmdd.sys
Kernel Driver True System Running OK
Ignore False True
modem Modem c:\winnt\system32\drivers\modem.sys
Kernel Driver False Manual Stopped OK
Ignore False False
mouclass Mouse Class Driver
c:\winnt\system32\drivers\mouclass.sys Kernel Driver
True System Running OK Normal False
True
mountmgr MountMgr c:\winnt\system32\drivers\mountmgr.sys
Kernel Driver True Boot Running OK
Normal False True
mraid35x mraid35x Not Available Kernel Driver
False Disabled Stopped OK Normal False
False
mrxsmb MRXSMB c:\winnt\system32\drivers\mrxsmb.sys File
System Driver True System Running OK
Normal False True
msfs Msfs c:\winnt\system32\drivers\msfs.sys File
System Driver True System Running OK
Normal False True
mskssrv Microsoft Streaming Service Proxy
c:\winnt\system32\drivers\mskssrv.sys Kernel Driver
False Manual Stopped OK Normal False
False
mspclock Microsoft Streaming Clock Proxy
c:\winnt\system32\drivers\mspclock.sys Kernel Driver
False Manual Stopped OK Normal False
False
```

```
mspqm Microsoft Streaming Quality Manager Proxy
c:\winnt\system32\drivers\mspqm.sys Kernel Driver
False Manual Stopped OK Normal False
False
mup Mup c:\winnt\system32\drivers\mup.sys File
System Driver True Boot Running OK
Normal False True
ndis NDIS System Driver c:\winnt\system32\drivers\ndis.sys
Kernel Driver True Boot Running OK
Normal False True
ndistapi Remote Access NDIS TAPI Driver
c:\winnt\system32\drivers\ndistapi.sys Kernel Driver
True Manual Running OK Normal False
True
ndiswan Remote Access NDIS WAN Driver
c:\winnt\system32\drivers\ndiswan.sys Kernel Driver
True Manual Running OK Normal False
True
ndproxy NDIS Proxy
c:\winnt\system32\drivers\ndproxy.sys Kernel Driver
True Manual Running OK Normal False
True
netbios NetBIOS Interface c:\winnt\system32\drivers\netbios.sys
File System Driver True System Running OK
Normal False True
netbt NetBios over Tcpip c:\winnt\system32\drivers\netbt.sys
Kernel Driver True System Running OK
Normal False True
netdetect NetDetect c:\winnt\system32\drivers\netdtect.sys
Kernel Driver False Manual Stopped OK
Normal False False
npfs Npfs c:\winnt\system32\drivers\npfs.sys File
System Driver True System Running OK
Normal False True
ntfs Ntfs c:\winnt\system32\drivers\ntfs.sys File
System Driver True Disabled Running OK
Normal False True
null Null c:\winnt\system32\drivers\null.sys
Kernel Driver True System Running OK
Normal False True
nwlnkflt IPX Traffic Filter Driver
c:\winnt\system32\drivers\nwlnkflt.sys Kernel Driver
False Manual Stopped OK Normal False
False
nwlnkfwd IPX Traffic Forwarder Driver
c:\winnt\system32\drivers\nwlnkfwd.sys Kernel Driver
False Manual Stopped OK Normal False
False
parallel Parallel class driver c:\winnt\system32\drivers\parallel.sys
Kernel Driver True Manual Running OK
Normal False True
parport Parallel port driver c:\winnt\system32\drivers\parport.sys
Kernel Driver True System Running OK
Ignore False True
partmgr PartMgr c:\winnt\system32\drivers\partmgr.sys
Kernel Driver True Boot Running OK
Normal False True
parvdm ParVdm c:\winnt\system32\drivers\parvdm.sys
Kernel Driver True Auto Running OK
Ignore False True
pci PCI Bus Driver c:\winnt\system32\drivers\pci.sys
Kernel Driver True Boot Running OK
Critical False True
pcidump PCIDump Not Available Kernel Driver
False System Stopped OK Ignore False
False
pciide PCIIde Not Available Kernel Driver
False Disabled Stopped OK Normal False
False
pcmcia Pcmcia c:\winnt\system32\drivers\pcmcia.sys
Kernel Driver False Disabled Stopped OK
Normal False False
pdcomp PDCOMP Not Available Kernel Driver
False Manual Stopped OK Ignore False
False
pdframe PDFRAME Not Available Kernel Driver
False Manual Stopped OK Ignore False
False
pdreli PDRELI Not Available Kernel Driver
False Manual Stopped OK Ignore False
False
pdrframe PDRFRAME Not Available Kernel Driver
False Manual Stopped OK Ignore False
False
pptpminiport WAN Miniport (PPTP)
c:\winnt\system32\drivers\raspptp.sys Kernel Driver
True Manual Running OK Normal False
True
ptilink Direct Parallel Link Driver
c:\winnt\system32\drivers\ptilink.sys Kernel Driver
True Manual Running OK Normal False
True
ql1080 ql1080 Not Available Kernel Driver
False Disabled Stopped OK Normal False
False
ql10wnt Ql10wnt Not Available Kernel Driver
False Disabled Stopped OK Normal False
False
ql1240 ql1240 Not Available Kernel Driver
False Disabled Stopped OK Normal False
False
ql2100 ql2100 Not Available Kernel Driver
False Disabled Stopped OK Normal False
False
rasacd Remote Access Auto Connection Driver
c:\winnt\system32\drivers\rasacd.sys Kernel Driver
True System Running OK Normal False
True
rasl2tp WAN Miniport (L2TP)
c:\winnt\system32\drivers\rasl2tp.sys Kernel Driver
True Manual Running OK Normal False
True
raspti Direct Parallel c:\winnt\system32\drivers\raspti.sys
Kernel Driver True Manual Running OK
Normal False True
rca Microsoft Streaming Network Raw Channel Access
c:\winnt\system32\drivers\rca.sysKernel Driver False
Manual Stopped OK Normal False False
rdbss Rdbss c:\winnt\system32\drivers\rdbss.sys File
System Driver True System Running OK
Normal False True
rdpwd RDPWD c:\winnt\system32\drivers\rdpwd.sys
Kernel Driver False Manual Stopped OK
Ignore False False
redbook Digital CD Audio Playback Filter Driver
c:\winnt\system32\drivers\redbook.sys Kernel Driver
False System Stopped OK Normal False
False
s3inc S3Inc c:\winnt\system32\drivers\s3mt3d.sys
Kernel Driver True Manual Running OK
Ignore False True
serenum Serenum Filter Driver
c:\winnt\system32\drivers\serenum.sys Kernel Driver
```

True Manual Running OK Normal False
True
serial Serial port driver c:\winnt\system32\drivers\serial.sys
Kernel Driver True System Running OK
Ignore False True
sfloppy Sfloppy c:\winnt\system32\drivers\sfloppy.sys
Kernel Driver False System Stopped OK
Ignore False False
sglfb sglfb Not Available Kernel Driver
False System Stopped OK Normal False
False
simbad Simbad Not Available Kernel Driver
False Disabled Stopped OK Normal False
False
srv Srv c:\winnt\system32\drivers\srv.sysFile System
Driver True Manual Running OK Normal
False True
swenum Software Bus Driver
c:\winnt\system32\drivers\swenum.sys Kernel Driver
True Manual Running OK Normal False
True
symc810 symc810 Not Available Kernel Driver
False Disabled Stopped OK Normal False
False
symc8xx symc8xx Not Available Kernel Driver
False Disabled Stopped OK Normal False
False
sym_hi sym_hi Not Available Kernel Driver
False Disabled Stopped OK Normal False
False
tcpip TCP/IP Protocol Driver
c:\winnt\system32\drivers\tcpip.sys Kernel Driver
True System Running OK Normal False
True
tdasync TDASYNC c:\winnt\system32\drivers\tdasync.sys
Kernel Driver False Manual Stopped OK
Ignore False False
tdipx TDIPX c:\winnt\system32\drivers\tdipx.sys
Kernel Driver False Manual Stopped OK
Ignore False False
tdnetb TDNETB c:\winnt\system32\drivers\tdnetb.sys
Kernel Driver False Manual Stopped OK
Ignore False False
tdpipe TDPIPE c:\winnt\system32\drivers\tdpipe.sys
Kernel Driver False Manual Stopped OK
Ignore False False
tdspx TDSPX c:\winnt\system32\drivers\tdspx.sys
Kernel Driver False Manual Stopped OK
Ignore False False
tdtcp TDTCP c:\winnt\system32\drivers\tdtcp.sys
Kernel Driver False Manual Stopped OK
Ignore False False
termdd Terminal Device Driver
c:\winnt\system32\drivers\termdd.sys Kernel Driver
False Disabled Stopped OK Normal False
False
tga tga Not Available Kernel Driver
False System Stopped OK Ignore False
False
twintail IBM ServeRAID Failover Driver
c:\winnt\system32\drivers\twintail.sys Kernel Driver
True Boot Running OK Normal False
True
udfs Udfs c:\winnt\system32\drivers\udfs.sys File
System Driver False Disabled Stopped OK
Normal False False
uhcd Microsoft USB Universal Host Controller Driver
c:\winnt\system32\drivers\uhcd.sys Kernel Driver
True Manual Running OK Normal False
True
update Microcode Update Driver
c:\winnt\system32\drivers\update.sys Kernel Driver
True Manual Running OK Normal False
True
usbhub Microsoft USB Standard Hub Driver
c:\winnt\system32\drivers\usbhub.sys Kernel Driver
True Manual Running OK Normal False
True
vgasave VgaSave c:\winnt\system32\drivers\vga.sys
Kernel Driver True System Running OK
Ignore False True
wanarp Remote Access IP ARP Driver
c:\winnt\system32\drivers\wanarp.sys Kernel Driver
True Manual Running OK Normal False
True
wdica WDICA Not Available Kernel Driver
False Manual Stopped OK Ignore False
False

[Environment Variables]

Variable Value User Name
ComSpec %SystemRoot%\system32\cmd.exe <SYSTEM>
NUMBER_OF_PROCESSORS 8 <SYSTEM>
OS Windows_NT <SYSTEM>
Os2LibPath %SystemRoot%\system32\os2\dll;
<SYSTEM>
Path
%SystemRoot%\system32;%SystemRoot%;%SystemRoot%\System32\
Wbem;C:\Program Files\Microsoft SQL
Server\MSSQL\BINN;C:\Program Files\Microsoft SQL
Server\80\Tools\BINN <SYSTEM>
PATHEXT
.COM;.EXE;.BAT;.CMD;.VBS;.VBE;.JS;.JSE;.WSF;.WSH
<SYSTEM>
PROCESSOR_ARCHITECTURE x86 <SYSTEM>
PROCESSOR_IDENTIFIER x86 Family 6 Model 10 Stepping 4,
GenuineIntel <SYSTEM>
PROCESSOR_LEVEL 6 <SYSTEM>
PROCESSOR_REVISION 0a04 <SYSTEM>
TEMP %SystemRoot%\TEMP <SYSTEM>
TMP %SystemRoot%\TEMP <SYSTEM>
windir %SystemRoot% <SYSTEM>
TEMP %USERPROFILE%\Local Settings\Temp
SGNODE01\Administrator
TMP %USERPROFILE%\Local Settings\Temp
SGNODE01\Administrator

[Jobs]

[Following are sub-categories of this main category]

[Print]

Document Size Owner Notify Status Time
Submitted Start Time Until Time Elapsed Time Pages Printed
Job ID Priority Parameters Driver Name Print Processor
Host Print Queue Data Type Name
No print jobs

[Network Connections]

Local Name Remote Name Type Status
User Name

```
E:          \\192.168.125.251\e$\shogun     Disk        OK
SGNODE01\Administrator

[Running Tasks]

Name    Path    Process ID  Priority    Min Working Set
Max Working Set     Start Time  Version     Size    File Date
system idle process     Not Available       0       0       Not
Available   Not Available       Not Available       Unknown
Unknown     Unknown
system      Not Available       8       8       0
1413120     Not Available       Unknown     Unknown     Unknown
smss.exe    c:\winnt\system32\smss.exe      184     11
204800      1413120     3/12/2001 11:29:54 AM       5.00.2195.31
44.27 KB (45,328 bytes)         7/27/2000 8:00:00 PM
csrss.exe   Not Available       212     13      Not Available
Not Available       3/12/2001 11:29:58 AM       Unknown
Unknown     Unknown
winlogon.exe        c:\winnt\system32\winlogon.exe  232     13
204800      1413120     3/12/2001 11:30:00 AM
5.00.2195.1600      172.77 KB (176,912 bytes)       7/27/2000
8:00:00 PM
services.exe    c:\winnt\system32\services.exe
260     9       204800  1413120 3/12/2001
11:30:01 AM     5.00.2134.1     86.77 KB (88,848
bytes)  7/27/2000 8:00:00 PM
lsass.exe       c:\winnt\system32\lsass.exe   272
        13      204800  1413120 3/12/2001
11:30:01 AM     5.00.2195.1620 32.77 KB (33,552
bytes)  7/27/2000 8:00:00 PM
gnconmgr.exe    c:\winnt\system32\gnconmgr.exe
408     8       204800  1413120 3/12/2001
11:30:03 AM     4.1.1   128.05 KB (131,119 bytes)
2/13/2001 9:01:54 AM
svchost.exe     c:\winnt\system32\svchost.exe 468
        8       204800  1413120 3/12/2001
11:30:04 AM     5.00.2134.1     7.77 KB (7,952
bytes)  7/27/2000 8:00:00 PM
spoolsv.exe     c:\winnt\system32\spoolsv.exe 496
        8       204800  1413120 3/12/2001
11:30:04 AM     5.00.2161.1     43.77 KB (44,816
bytes)  2/8/2001 10:57:40 AM
msdtc.exe       c:\winnt\system32\msdtc.exe   524
        8       204800  1413120 3/12/2001
11:30:04 AM     1999.9.3421.3   6.77 KB (6,928
bytes)  2/8/2001 11:06:14 AM
svchost.exe     c:\winnt\system32\svchost.exe 800
        8       204800  1413120 3/12/2001
11:30:12 AM     5.00.2134.1     7.77 KB (7,952
bytes)  7/27/2000 8:00:00 PM
llssrv.exe      c:\winnt\system32\llssrv.exe  824
        9       204800  1413120 3/12/2001
11:30:12 AM     5.00.2167.1     114.27 KB
(117,008 bytes)         7/27/2000 8:00:00 PM
procconsvc.exe c:\winnt\system32\procconsvc.exe
892     8       204800  1413120 3/12/2001
11:30:13 AM     1, 0, 1, 23     72.27 KB (74,000
bytes)  2/8/2001 11:06:30 AM
regsvc.exe      c:\winnt\system32\regsvc.exe  956
        8       204800  1413120 3/12/2001
11:30:14 AM     5.00.2195.31    65.27 KB (66,832
bytes)  7/27/2000 8:00:00 PM
procconmd8.exe c:\winnt\system32\procconmd8.exe
968     8       204800  1413120 3/12/2001
11:30:14 AM     1, 0, 1, 23     24.27 KB (24,848
bytes)  2/8/2001 11:06:30 AM
rshsvc.exe      c:\winnt\system32\rshsvc.exe  848
        8       204800  1413120 3/12/2001
11:30:17 AM     Not Available   53.50 KB (54,784
bytes)  2/15/2001 11:03:08 AM
mstask.exe      c:\winnt\system32\mstask.exe
1028    8       204800  1413120 3/12/2001
11:30:17 AM     4.71.2137.1     115.27 KB
(118,032 bytes)         2/8/2001 4:08:40 PM
raidserv.exe    c:\program
files\raidman\raidserv.exe    1076    8
204800  1413120 3/12/2001 11:30:17 AM  Not
Available       40.50 KB (41,472 bytes)
2/12/2001 9:16:15 AM
tcpsvcs.exe     c:\winnt\system32\tcpsvcs.exe
1116    8       204800  1413120 3/12/2001
11:30:17 AM     5.00.2134.1     24.77 KB (25,360
bytes)  7/27/2000 8:00:00 PM
winmgmt.exe
c:\winnt\system32\wbem\winmgmt.exe    1136    8
204800  1413120 3/12/2001 11:30:17 AM
1.50.1085.0009 192.08 KB (196,685 bytes)
7/27/2000 8:00:00 PM
wins.exe        c:\winnt\system32\wins.exe
1152    8       204800  1413120 3/12/2001
11:30:17 AM     5.00.2195.1600 147.77 KB
(151,312 bytes)         2/8/2001 11:06:08 AM
dfssvc.exe      c:\winnt\system32\dfssvc.exe
1268    8       204800  1413120 3/12/2001
11:30:22 AM     5.00.2195.1340 87.77 KB (89,872
bytes)  7/27/2000 8:00:00 PM
explorer.exe    c:\winnt\explorer.exe 1372    8
204800  1413120 3/12/2001 11:31:13 AM
5.00.3103.1000 237.27 KB (242,960 bytes)
7/27/2000 8:00:00 PM
sqlmangr.exe    c:\program files\microsoft sql
server\80\tools\binn\sqlmangr.exe     1432    8
204800  1413120 3/12/2001 11:31:14 AM
2000.080.0194.00        68.00 KB (69,632 bytes)
2/13/2001 3:21:26 PM
svchost.exe     c:\winnt\system32\svchost.exe
1560    8       204800  1413120 3/12/2001
11:32:01 AM     5.00.2134.1     7.77 KB (7,952
bytes)  7/27/2000 8:00:00 PM
cmd.exe c:\winnt\system32\cmd.exe     1364    8
204800  1413120 3/12/2001 11:32:47 AM
5.00.2195.1600 230.77 KB (236,304 bytes)
7/27/2000 8:00:00 PM
cmd.exe c:\winnt\system32\cmd.exe     1088    8
204800  1413120 3/12/2001 12:13:34 PM
5.00.2195.1600 230.77 KB (236,304 bytes)
7/27/2000 8:00:00 PM
calc.exe        c:\winnt\system32\calc.exe
1684    8       204800  1413120 3/12/2001 5:16:48
PM      5.00.2134.1     89.27 KB (91,408 bytes)
2/8/2001 11:06:31 AM
mmc.exe c:\winnt\system32\mmc.exe     1500    8
204800  1413120 3/14/2001 7:56:47 AM
5.00.2153.1     589.27 KB (603,408 bytes)
7/27/2000 8:00:00 PM
rsvp.exe        c:\winnt\system32\rsvp.exe
2968    8       204800  1413120 3/14/2001 7:59:37
AM      5.00.2167.1     172.77 KB (176,912 bytes)
7/27/2000 8:00:00 PM


[Loaded Modules]


Name    Version Size    File Date
Manufacturer    Path
```

```
traffic.dll    5.00.2139.1    30.77 KB (31,504
bytes)  7/27/2000 8:00:00 PM   Microsoft
Corporation    c:\winnt\system32\traffic.dll

rsvp.exe       5.00.2167.1    172.77 KB
(176,912 bytes)        7/27/2000 8:00:00 PM
Microsoft Corporation
c:\winnt\system32\rsvp.exe

wbemprox.dll   1.50.1085.0015 40.08 KB (41,040
bytes)  7/27/2000 8:00:00 PM   Microsoft
Corporation
c:\winnt\system32\wbem\wbemprox.dll

mlang.dll      5.00.3103.1000 510.77 KB
(523,024 bytes)        7/27/2000 8:00:00 PM
Microsoft Corporation
c:\winnt\system32\mlang.dll

rassapi.dll    5.00.2188.1    14.27 KB (14,608
bytes)  7/27/2000 8:00:00 PM   Microsoft
Corporation    c:\winnt\system32\rassapi.dll

adsnt.dll      5.00.2195.1600 194.27 KB
(198,928 bytes)        7/27/2000 8:00:00 PM
Microsoft Corporation
c:\winnt\system32\adsnt.dll

dbghelp.dll    5.00.2195.1620 159.27 KB
(163,088 bytes)        7/27/2000 8:00:00 PM
Microsoft Corporation
c:\winnt\system32\dbghelp.dll

localsec.dll   5.00.2195.1340 227.27 KB
(232,720 bytes)        7/27/2000 8:00:00 PM
Microsoft Corporation
c:\winnt\system32\localsec.dll

devmgr.dll     5.00.2166.1    215.77 KB
(220,944 bytes)        7/27/2000 8:00:00 PM
Microsoft Corporation
c:\winnt\system32\devmgr.dll

filemgmt.dll   5.00.2134.1    287.27 KB
(294,160 bytes)        7/27/2000 8:00:00 PM
Microsoft Corporation
c:\winnt\system32\filemgmt.dll

pdh.dll 5.00.2195.1600 143.27 KB (146,704 bytes)
7/27/2000 8:00:00 PM   Microsoft Corporation
c:\winnt\system32\pdh.dll

smlogcfg.dll   5.00.2163.1    273.27 KB
(279,824 bytes)        7/27/2000 8:00:00 PM
Microsoft Corporation
c:\winnt\system32\smlogcfg.dll

cabinet.dll    5.00.2147.1    54.77 KB (56,080
bytes)  7/27/2000 8:00:00 PM   Microsoft
Corporation    c:\winnt\system32\cabinet.dll

msinfo32.dll   5.00.2177.1    312.27 KB
(319,760 bytes)        2/8/2001 4:08:48 PM
Microsoft Corporation c:\program files\common
files\microsoft shared\msinfo\msinfo32.dll

riched20.dll   5.30.23.1203   421.27 KB
(431,376 bytes)        7/27/2000 8:00:00 PM
Microsoft Corporation
c:\winnt\system32\riched20.dll

riched32.dll   5.00.2134.1    3.77 KB (3,856
bytes)  7/27/2000 8:00:00 PM   Microsoft
Corporation    c:\winnt\system32\riched32.dll

els.dll 5.00.2175.1    151.27 KB (154,896 bytes)
7/27/2000 8:00:00 PM   Microsoft Corporation
c:\winnt\system32\els.dll

ntmsmgr.dll    1,0,0,1 427.77 KB (438,032 bytes)
7/27/2000 8:00:00 PM   Microsoft Corporation and
HighGround Systems, Inc.
c:\winnt\system32\ntmsmgr.dll

mmfutil.dll    1.50.1085.0000 32.06 KB (32,829
bytes)  7/27/2000 8:00:00 PM   Microsoft
Corporation    c:\winnt\system32\mmfutil.dll

logdrive.dll   1.50.1085.0000 200.06 KB
(204,863 bytes)        7/27/2000 8:00:00 PM
Microsoft Corporation
c:\winnt\system32\logdrive.dll

dfrgres.dll    5.00.2150.1    27.50 KB (28,160
bytes)  7/27/2000 8:00:00 PM   Executive
Software International, Inc.
c:\winnt\system32\dfrgres.dll

dfrgsnap.dll   5.00.2195.31   41.77 KB (42,768
bytes)  7/27/2000 8:00:00 PM   Executive
Software International, Inc.
c:\winnt\system32\dfrgsnap.dll

dmdskres.dll   2195.1600.297.3       119.50 KB
(122,368 bytes)        7/27/2000 8:00:00 PM
Microsoft Corp., VERITAS Software
c:\winnt\system32\dmdskres.dll

dmutil.dll     2195.23.297.2  42.27 KB (43,280
bytes)  7/27/2000 8:00:00 PM   VERITAS Software
Corp.   c:\winnt\system32\dmutil.dll

ntmsapi.dll    5.00.1948.1    50.27 KB (51,472
bytes)  7/27/2000 8:00:00 PM   Microsoft
Corporation    c:\winnt\system32\ntmsapi.dll

dmdskmgr.dll   2195.1600.297.3       160.27 KB
(164,112 bytes)        7/27/2000 8:00:00 PM
Microsoft Corp., VERITAS Software
c:\winnt\system32\dmdskmgr.dll

mycomput.dll   5.00.2134.1    107.77 KB
(110,352 bytes)        7/27/2000 8:00:00 PM
Microsoft Corporation
c:\winnt\system32\mycomput.dll

mmcndmgr.dll   5.00.2178.1    815.27 KB
(834,832 bytes)        7/27/2000 8:00:00 PM
Microsoft Corporation
c:\winnt\system32\mmcndmgr.dll

mmc.exe 5.00.2153.1    589.27 KB (603,408 bytes)
7/27/2000 8:00:00 PM   Microsoft Corporation
c:\winnt\system32\mmc.exe

calc.exe       5.00.2134.1    89.27 KB (91,408
bytes)  2/8/2001 11:06:31 AM   Microsoft
Corporation    c:\winnt\system32\calc.exe

cmd.exe 5.00.2195.1600 230.77 KB (236,304 bytes)
7/27/2000 8:00:00 PM   Microsoft Corporation
c:\winnt\system32\cmd.exe

tapisrv.dll    5.00.2195.1600 168.77 KB
(172,816 bytes)        7/27/2000 8:00:00 PM
Microsoft Corporation
c:\winnt\system32\tapisrv.dll

sqlmangr.rll   2000.080.0194.00      96.00 KB
(98,304 bytes) 2/13/2001 3:21:26 PM   Microsoft
Corporation    c:\program files\microsoft sql

server\80\tools\binn\resources\1033\sqlmangr.rl
l

sqlsvc.rll     2000.080.0194.00      24.00 KB
(24,576 bytes) 2/13/2001 1:51:05 PM   Microsoft
Corporation    c:\program files\microsoft sql
server\80\tools\binn\resources\1033\sqlsvc.rll

odbcint.dll    3.520.6526.0   88.00 KB (90,112
bytes)  2/13/2001 1:46:25 PM   Microsoft
Corporation    c:\winnt\system32\odbcint.dll

sqlresld.dll   2000.080.0194.00      28.06 KB
(28,738 bytes) 2/13/2001 1:51:00 PM   Microsoft
Corporation    c:\program files\microsoft sql
server\80\tools\binn\sqlresld.dll
```

```
odbcbcp.dll     2000.080.0194.00      28.07 KB
(28,742 bytes) 2/13/2001 1:46:32 PM   Microsoft
Corporation    c:\winnt\system32\odbcbcp.dll

sqlsvc.dll      2000.080.0194.00      92.06 KB
(94,272 bytes) 2/13/2001 1:51:00 PM   Microsoft
Corporation    c:\program files\microsoft sql
server\80\tools\binn\sqlsvc.dll

sqlunirl.dll    2000.080.0194.00      176.06 KB
(180,290 bytes)       8/6/2000 2:51:56 AM
Microsoft Corporation
c:\winnt\system32\sqlunirl.dll

odbc32.dll      3.520.6526.0   216.27 KB
(221,456 bytes)       2/13/2001 1:46:25 PM
Microsoft Corporation
c:\winnt\system32\odbc32.dll

w95scm.dll      2000.080.0194.00      48.06 KB
(49,216 bytes) 2/13/2001 1:50:59 PM   Microsoft
Corporation    c:\program files\microsoft sql
server\80\tools\binn\w95scm.dll

sqlmangr.exe    2000.080.0194.00      68.00 KB
(69,632 bytes) 2/13/2001 3:21:26 PM   Microsoft
Corporation    c:\program files\microsoft sql
server\80\tools\binn\sqlmangr.exe

hhsetup.dll     4.74.8702      66.27 KB (67,856
bytes) 7/27/2000 8:00:00 PM   Microsoft
Corporation    c:\winnt\system32\hhsetup.dll

mmcshext.dll    5.00.2153.1    24.27 KB (24,848
bytes) 7/27/2000 8:00:00 PM   Microsoft
Corporation    c:\winnt\system32\mmcshext.dll

shdoclc.dll     5.00.3103.1000 324.50 KB
(332,288 bytes)       7/27/2000 8:00:00 PM
Microsoft Corporation
c:\winnt\system32\shdoclc.dll

wininet.dll     5.00.3103.1000 456.77 KB
(467,728 bytes)       7/27/2000 8:00:00 PM
Microsoft Corporation
c:\winnt\system32\wininet.dll

urlmon.dll      5.00.3103.1000 440.77 KB
(451,344 bytes)       7/27/2000 8:00:00 PM
Microsoft Corporation
c:\winnt\system32\urlmon.dll

browselc.dll    5.00.3103.1000 34.50 KB (35,328
bytes) 7/27/2000 8:00:00 PM   Microsoft
Corporation    c:\winnt\system32\browselc.dll

faxshell.dll    5.00.2134.1    8.27 KB (8,464
bytes) 7/27/2000 8:00:00 PM   Microsoft
Corporation    c:\winnt\system32\faxshell.dll

msacm32.dll     5.00.2134.1    65.27 KB (66,832
bytes) 7/27/2000 8:00:00 PM   Microsoft
Corporation    c:\winnt\system32\msacm32.dll

avifil32.dll    5.00.2134.1    76.27 KB (78,096
bytes) 7/27/2000 8:00:00 PM   Microsoft
Corporation    c:\winnt\system32\avifil32.dll

msvfw32.dll     5.00.2134.1    113.77 KB
(116,496 bytes)       7/27/2000 8:00:00 PM
Microsoft Corporation
c:\winnt\system32\msvfw32.dll

docprop2.dll    5.00.2195.1387 308.77 KB
(316,176 bytes)       7/27/2000 8:00:00 PM
Microsoft Corporation
c:\winnt\system32\docprop2.dll

linkinfo.dll    5.00.2195.1387 16.77 KB (17,168
bytes) 7/27/2000 8:00:00 PM   Microsoft
Corporation    c:\winnt\system32\linkinfo.dll

powrprof.dll    5.00.3103.1000 13.27 KB (13,584
bytes) 7/27/2000 8:00:00 PM   Microsoft
Corporation    c:\winnt\system32\powrprof.dll

batmeter.dll    5.00.2920.0000 20.27 KB (20,752
bytes) 7/27/2000 8:00:00 PM   Microsoft
Corporation    c:\winnt\system32\batmeter.dll

stobject.dll    5.00.2195.1387 79.27 KB (81,168
bytes) 7/27/2000 8:00:00 PM   Microsoft
Corporation    c:\winnt\system32\stobject.dll

webcheck.dll    5.00.3103.1000 251.77 KB
(257,808 bytes)       7/27/2000 8:00:00 PM
Microsoft Corporation
c:\winnt\system32\webcheck.dll

ntshrui.dll     5.00.2134.1    46.77 KB (47,888
bytes) 7/27/2000 8:00:00 PM   Microsoft
Corporation    c:\winnt\system32\ntshrui.dll

mydocs.dll      5.00.3103.1000 57.77 KB (59,152
bytes) 7/27/2000 8:00:00 PM   Microsoft
Corporation    c:\winnt\system32\mydocs.dll

browseui.dll    5.00.3103.1000 788.77 KB
(807,696 bytes)       7/27/2000 8:00:00 PM
Microsoft Corporation
c:\winnt\system32\browseui.dll

shdocvw.dll     5.00.3103.1000 1.05 MB
(1,104,144 bytes)     7/27/2000 8:00:00 PM
Microsoft Corporation
c:\winnt\system32\shdocvw.dll

explorer.exe    5.00.3103.1000 237.27 KB
(242,960 bytes)       7/27/2000 8:00:00 PM
Microsoft Corporation  c:\winnt\explorer.exe

dfssvc.exe      5.00.2195.1340 87.77 KB (89,872
bytes) 7/27/2000 8:00:00 PM   Microsoft
Corporation    c:\winnt\system32\dfssvc.exe

wins.exe        5.00.2195.1600 147.77 KB
(151,312 bytes)       2/8/2001 11:06:08 AM
Microsoft Corporation
c:\winnt\system32\wins.exe

wshnetbs.dll    5.00.2134.1    7.77 KB (7,952
bytes) 7/27/2000 8:00:00 PM   Microsoft
Corporation    c:\winnt\system32\wshnetbs.dll

rapilib.dll     5.00.2167.1    25.27 KB (25,872
bytes) 7/27/2000 8:00:00 PM   Microsoft
Corporation    c:\winnt\system32\rapilib.dll

rsvpsp.dll      5.00.2167.1    74.77 KB (76,560
bytes) 7/27/2000 8:00:00 PM   Microsoft
Corporation    c:\winnt\system32\rsvpsp.dll

provthrd.dll    1.50.1085.0000 68.07 KB (69,708
bytes) 2/8/2001 4:08:39 PM    Microsoft
Corporation
c:\winnt\system32\wbem\provthrd.dll

ntevt.dll       1.50.1085.0000 192.06 KB
(196,669 bytes)       7/27/2000 8:00:00 PM
Microsoft Corporation
c:\winnt\system32\wbem\ntevt.dll

perfos.dll      5.00.2155.1    21.27 KB (21,776
bytes) 7/27/2000 8:00:00 PM   Microsoft
Corporation    c:\winnt\system32\perfos.dll

framedyn.dll    1.50.1085.0000 164.05 KB
(167,992 bytes)       7/27/2000 8:00:00 PM
Microsoft Corporation
c:\winnt\system32\wbem\framedyn.dll

cimwin32.dll    1.50.1085.0016 1.02 MB
(1,073,232 bytes)     7/27/2000 8:00:00 PM
Microsoft Corporation
c:\winnt\system32\wbem\cimwin32.dll

wbemsvc.dll     1.50.1085.0007 40.07 KB (41,036
bytes) 7/27/2000 8:00:00 PM   Microsoft
Corporation
c:\winnt\system32\wbem\wbemsvc.dll

wbemess.dll     1.50.1085.0007 364.07 KB
(372,804 bytes)       7/27/2000 8:00:00 PM
```

```
Microsoft Corporation
c:\winnt\system32\wbem\wbemess.dll

fastprox.dll   1.50.1085.0007 144.08 KB
(147,536 bytes)        7/27/2000 8:00:00 PM
Microsoft Corporation
c:\winnt\system32\wbem\fastprox.dll

wbemcore.dll   1.50.1085.0008 628.07 KB
(643,140 bytes)        7/27/2000 8:00:00 PM
Microsoft Corporation
c:\winnt\system32\wbem\wbemcore.dll

wbemcomn.dll   1.50.1085.0007 692.07 KB
(708,675 bytes)        7/27/2000 8:00:00 PM
Microsoft Corporation
c:\winnt\system32\wbem\wbemcomn.dll

winmgmt.exe    1.50.1085.0009 192.08 KB
(196,685 bytes)        7/27/2000 8:00:00 PM
Microsoft Corporation
c:\winnt\system32\wbem\winmgmt.exe

simptcp.dll    5.00.2134.1    19.27 KB (19,728
bytes) 2/8/2001 11:06:09 AM   Microsoft
Corporation    c:\winnt\system32\simptcp.dll

tcpsvcs.exe    5.00.2134.1    24.77 KB (25,360
bytes) 7/27/2000 8:00:00 PM   Microsoft
Corporation    c:\winnt\system32\tcpsvcs.exe

nfstcppr.dll   Not Available  104.00 KB
(106,496 bytes)        2/12/2001 9:16:03 AM   Not
Available      c:\program
files\raidman\nfstcppr.dll

nfstjdll.dll   Not Available  237.50 KB
(243,200 bytes)        2/12/2001 9:16:03 AM   Not
Available      c:\program
files\raidman\nfstjdll.dll

net.dll Not Available  22.50 KB (23,040 bytes)
2/12/2001 9:16:12 AM   Not Available  c:\program
files\raidman\jre\bin\net.dll

zip.dll Not Available  40.00 KB (40,960 bytes)
2/12/2001 9:16:12 AM   Not Available  c:\program
files\raidman\jre\bin\zip.dll

javai.dll      Not Available  513.50 KB
(525,824 bytes)        2/12/2001 9:16:12 AM   Not
Available      c:\program
files\raidman\jre\bin\javai.dll

raidserv.exe   Not Available  40.50 KB (41,472
bytes) 2/12/2001 9:16:15 AM   Not Available
c:\program files\raidman\raidserv.exe

msidle.dll     5.00.3103.1000 6.27 KB (6,416
bytes) 7/27/2000 8:00:00 PM   Microsoft
Corporation    c:\winnt\system32\msidle.dll

mstask.exe     4.71.2137.1    115.27 KB
(118,032 bytes)        2/8/2001 4:08:40 PM
Microsoft Corporation
c:\winnt\system32\mstask.exe

rshsvc.dll     Not Available  18.00 KB (18,432
bytes) 2/15/2001 11:03:08 AM  Not Available
c:\winnt\system32\rshsvc.dll

rshsvc.exe     Not Available  53.50 KB (54,784
bytes) 2/15/2001 11:03:08 AM  Not Available
c:\winnt\system32\rshsvc.exe

procconmd8.exe 1, 0, 1, 23    24.27 KB (24,848
bytes) 2/8/2001 11:06:30 AM   Sequent Computer
Systems, Inc.  c:\winnt\system32\procconmd8.exe

regsvc.exe     5.00.2195.31   65.27 KB (66,832
bytes) 7/27/2000 8:00:00 PM   Microsoft
Corporation    c:\winnt\system32\regsvc.exe

ntmarta.dll    5.00.2158.1    98.77 KB (101,136
bytes) 7/27/2000 8:00:00 PM   Microsoft
Corporation    c:\winnt\system32\ntmarta.dll

psapi.dll      5.00.2134.1    28.27 KB (28,944
bytes) 7/27/2000 8:00:00 PM   Microsoft
Corporation    c:\winnt\system32\psapi.dll

procconsvc.exe 1, 0, 1, 23    72.27 KB (74,000
bytes) 2/8/2001 11:06:30 AM   Sequent Computer
Systems, Inc.  c:\winnt\system32\procconsvc.exe

llsrpc.dll     5.00.2149.1    45.77 KB (46,864
bytes) 7/27/2000 8:00:00 PM   Microsoft
Corporation    c:\winnt\system32\llsrpc.dll

llssrv.exe     5.00.2167.1    114.27 KB
(117,008 bytes)        7/27/2000 8:00:00 PM
Microsoft Corporation
c:\winnt\system32\llssrv.exe

rasdlg.dll     5.00.2194.1    514.27 KB
(526,608 bytes)        7/27/2000 8:00:00 PM
Microsoft Corporation
c:\winnt\system32\rasdlg.dll

netcfgx.dll    5.00.2195.1618 533.77 KB
(546,576 bytes)        7/27/2000 8:00:00 PM
Microsoft Corporation
c:\winnt\system32\netcfgx.dll

rasmans.dll    5.00.2195.27   146.77 KB
(150,288 bytes)        7/27/2000 8:00:00 PM
Microsoft Corporation
c:\winnt\system32\rasmans.dll

wmi.dll 5.00.2195.1600 6.27 KB (6,416 bytes)
7/27/2000 8:00:00 PM   Microsoft Corporation
c:\winnt\system32\wmi.dll

netshell.dll   5.00.2195.1600 456.77 KB
(467,728 bytes)        7/27/2000 8:00:00 PM
Microsoft Corporation
c:\winnt\system32\netshell.dll

netman.dll     5.00.2195.1600 89.27 KB (91,408
bytes) 7/27/2000 8:00:00 PM   Microsoft
Corporation    c:\winnt\system32\netman.dll

ntmsdba.dll    5.00.2195.1600 167.77 KB
(171,792 bytes)        7/27/2000 8:00:00 PM
Microsoft Corporation
c:\winnt\system32\ntmsdba.dll

sens.dll       5.00.2163.1    36.77 KB (37,648
bytes) 7/27/2000 8:00:00 PM   Microsoft
Corporation    c:\winnt\system32\sens.dll

ntmssvc.dll    5.00.2187.1    390.77 KB
(400,144 bytes)        7/27/2000 8:00:00 PM
Microsoft Corporation
c:\winnt\system32\ntmssvc.dll

es.dll 2000.2.3465.0  228.77 KB (234,256 bytes)
10/16/2000 2:51:22 PM Microsoft Corporation
c:\winnt\system32\es.dll

mtxoci.dll     2000.2.3465.0  101.77 KB
(104,208 bytes)        10/16/2000 2:51:32 PM
Microsoft Corporation
c:\winnt\system32\mtxoci.dll

resutils.dll   5.00.2195.1613 39.77 KB (40,720
bytes) 7/27/2000 8:00:00 PM   Microsoft
Corporation    c:\winnt\system32\resutils.dll

clusapi.dll    5.00.2195.1613 54.27 KB (55,568
bytes) 7/27/2000 8:00:00 PM   Microsoft
Corporation    c:\winnt\system32\clusapi.dll

msvcp50.dll    5.00.7051      552.50 KB
(565,760 bytes)        7/27/2000 8:00:00 PM
Microsoft Corporation
c:\winnt\system32\msvcp50.dll

xolehlp.dll    1999.9.3421.3  17.27 KB (17,680
bytes) 2/8/2001 11:06:15 AM   Microsoft
Corporation    c:\winnt\system32\xolehlp.dll
```

```
msdtclog.dll   1999.9.3421.3  89.77 KB (91,920
bytes) 2/8/2001 11:06:14 AM   Microsoft
Corporation    c:\winnt\system32\msdtclog.dll

mtxclu.dll     2000.2.3465.0  51.27 KB (52,496
bytes) 10/16/2000 2:51:30 PM  Microsoft
Corporation    c:\winnt\system32\mtxclu.dll

msdtcprx.dll   2000.2.3465.0  626.27 KB
(641,296 bytes)       10/16/2000 2:51:24 PM
Microsoft Corporation
c:\winnt\system32\msdtcprx.dll

txfaux.dll     2000.2.3465.0  373.77 KB
(382,736 bytes)       10/16/2000 2:51:32 PM
Microsoft Corporation
c:\winnt\system32\txfaux.dll

msdtctm.dll    2000.2.3465.0  1.07 MB
(1,120,528 bytes)     10/16/2000 2:51:28 PM
Microsoft Corporation
c:\winnt\system32\msdtctm.dll

msdtc.exe      1999.9.3421.3  6.77 KB (6,928
bytes) 2/8/2001 11:06:14 AM   Microsoft
Corporation    c:\winnt\system32\msdtc.exe

inetpp.dll     5.00.2195.25   65.27 KB (66,832
bytes) 7/27/2000 8:00:00 PM   Microsoft
Corporation    c:\winnt\system32\inetpp.dll

win32spl.dll   5.00.2195.1340 92.27 KB (94,480
bytes) 7/27/2000 8:00:00 PM   Microsoft
Corporation    c:\winnt\system32\win32spl.dll

usbmon.dll     5.00.2165.1    11.27 KB (11,536
bytes) 7/27/2000 8:00:00 PM   Microsoft
Corporation    c:\winnt\system32\usbmon.dll

tcpmon.dll     5.00.2195.1225 40.77 KB (41,744
bytes) 7/27/2000 8:00:00 PM   Microsoft
Corporation    c:\winnt\system32\tcpmon.dll

pjlmon.dll     5.00.2165.1    12.77 KB (13,072
bytes) 6/9/2000 2:06:42 PM    Microsoft
Corporation    c:\winnt\system32\pjlmon.dll

cnbjmon.dll    5.00.2134.1    43.77 KB (44,816
bytes) 6/9/2000 2:05:56 PM    Microsoft
Corporation    c:\winnt\system32\cnbjmon.dll

localspl.dll   5.00.2195.1340 246.27 KB
(252,176 bytes)       7/27/2000 8:00:00 PM
Microsoft Corporation
c:\winnt\system32\localspl.dll

spoolss.dll    5.00.2161.1    61.77 KB (63,248
bytes) 2/8/2001 10:57:40 AM   Microsoft
Corporation    c:\winnt\system32\spoolss.dll

spoolsv.exe    5.00.2161.1    43.77 KB (44,816
bytes) 2/8/2001 10:57:40 AM   Microsoft
Corporation    c:\winnt\system32\spoolsv.exe

rpcss.dll      5.00.2195.2500 180.27 KB
(184,592 bytes)       10/16/2000 3:52:26 PM
Microsoft Corporation
c:\winnt\system32\rpcss.dll

svchost.exe    5.00.2134.1    7.77 KB (7,952
bytes) 7/27/2000 8:00:00 PM   Microsoft
Corporation    c:\winnt\system32\svchost.exe

vipl.dll       4.1.1  80.00 KB (81,920 bytes)
2/13/2001 9:01:54 AM  Giganet Incorporated
c:\winnt\system32\vipl.dll

gnconmgr.exe   4.1.1  128.05 KB (131,119 bytes)
2/13/2001 9:01:54 AM  Giganet Incorporated
c:\winnt\system32\gnconmgr.exe

dssbase.dll    5.00.2195.1391 141.27 KB
(144,656 bytes)       7/27/2000 8:00:00 PM
Microsoft Corporation
c:\winnt\system32\dssbase.dll

oakley.dll     5.00.2195.1600 378.77 KB
(387,856 bytes)       7/27/2000 8:00:00 PM
Microsoft Corporation
c:\winnt\system32\oakley.dll

mfc42u.dll     6.00.8665.0    972.05 KB
(995,384 bytes)       7/27/2000 8:00:00 PM
Microsoft Corporation
c:\winnt\system32\mfc42u.dll

polagent.dll   5.00.2195.1600 93.27 KB (95,504
bytes) 7/27/2000 8:00:00 PM   Microsoft
Corporation    c:\winnt\system32\polagent.dll

scecli.dll     5.00.2191.1    105.27 KB
(107,792 bytes)       7/27/2000 8:00:00 PM
Microsoft Corporation
c:\winnt\system32\scecli.dll

atl.dll 3.00.8449      57.56 KB (58,938 bytes)
7/27/2000 8:00:00 PM  Microsoft Corporation
c:\winnt\system32\atl.dll

certcli.dll    5.00.2175.1    132.27 KB
(135,440 bytes)       7/27/2000 8:00:00 PM
Microsoft Corporation
c:\winnt\system32\certcli.dll

ntdsatq.dll    5.00.2195.1284 31.27 KB (32,016
bytes) 7/27/2000 8:00:00 PM   Microsoft
Corporation    c:\winnt\system32\ntdsatq.dll

ntdsa.dll      5.00.2195.1600 987.27 KB
(1,010,960 bytes)     7/27/2000 8:00:00 PM
Microsoft Corporation
c:\winnt\system32\ntdsa.dll

kdcsvc.dll     5.00.2195.1284 133.77 KB
(136,976 bytes)       7/27/2000 8:00:00 PM
Microsoft Corporation
c:\winnt\system32\kdcsvc.dll

sfmapi.dll     5.00.2134.1    38.77 KB (39,696
bytes) 7/27/2000 8:00:00 PM   Microsoft
Corporation    c:\winnt\system32\sfmapi.dll

rassfm.dll     5.00.2195.1179 21.27 KB (21,776
bytes) 7/27/2000 8:00:00 PM   Microsoft
Corporation    c:\winnt\system32\rassfm.dll

schannel.dll   5.00.2195.1163 137.27 KB
(140,560 bytes)       7/27/2000 8:00:00 PM
Microsoft Corporation
c:\winnt\system32\schannel.dll

netlogon.dll   5.00.2195.1600 348.27 KB
(356,624 bytes)       7/27/2000 8:00:00 PM
Microsoft Corporation
c:\winnt\system32\netlogon.dll

msv1_0.dll     5.00.2195.1620 92.77 KB (94,992
bytes) 7/27/2000 8:00:00 PM   Microsoft
Corporation    c:\winnt\system32\msv1_0.dll

kerberos.dll   5.00.2195.1378 197.77 KB
(202,512 bytes)       7/27/2000 8:00:00 PM
Microsoft Corporation
c:\winnt\system32\kerberos.dll

msprivs.dll    5.00.2195.1600 41.50 KB (42,496
bytes) 7/27/2000 8:00:00 PM   Microsoft
Corporation    c:\winnt\system32\msprivs.dll

samsrv.dll     5.00.2195.1609 343.27 KB
(351,504 bytes)       7/27/2000 8:00:00 PM
Microsoft Corporation
c:\winnt\system32\samsrv.dll

lsasrv.dll     5.00.2195.1620 475.27 KB
(486,672 bytes)       7/27/2000 8:00:00 PM
Microsoft Corporation
c:\winnt\system32\lsasrv.dll

lsass.exe      5.00.2195.1620 32.77 KB (33,552
bytes) 7/27/2000 8:00:00 PM   Microsoft
Corporation    c:\winnt\system32\lsass.exe
```

```
esent.dll      6.0.3940.4     1.08 MB
(1,135,888 bytes)      7/27/2000 8:00:00 PM
Microsoft Corporation
c:\winnt\system32\esent.dll

msi.dll 1.11.1314.0    1.72 MB (1,798,928 bytes)
7/27/2000 8:00:00 PM  Microsoft Corporation
c:\winnt\system32\msi.dll

appmgmts.dll   5.00.2168.1    117.77 KB
(120,592 bytes)        7/27/2000 8:00:00 PM
Microsoft Corporation
c:\winnt\system32\appmgmts.dll

xactsrv.dll    5.00.2134.1    90.27 KB (92,432
bytes) 7/27/2000 8:00:00 PM  Microsoft
Corporation    c:\winnt\system32\xactsrv.dll

wmicore.dll    5.00.2178.1    70.77 KB (72,464
bytes) 7/27/2000 8:00:00 PM  Microsoft
Corporation    c:\winnt\system32\wmicore.dll

rasadhlp.dll   5.00.2168.1    7.27 KB (7,440
bytes) 7/27/2000 8:00:00 PM  Microsoft
Corporation    c:\winnt\system32\rasadhlp.dll

winrnr.dll     5.00.2195.1175 19.27 KB (19,728
bytes) 7/27/2000 8:00:00 PM  Microsoft
Corporation    c:\winnt\system32\winrnr.dll

rnr20.dll      5.00.2195.1207 35.77 KB (36,624
bytes) 7/27/2000 8:00:00 PM  Microsoft
Corporation    c:\winnt\system32\rnr20.dll

wshtcpip.dll   5.00.2134.1    17.27 KB (17,680
bytes) 7/27/2000 8:00:00 PM  Microsoft
Corporation    c:\winnt\system32\wshtcpip.dll

msafd.dll      5.00.2195.1614 102.77 KB
(105,232 bytes)        7/27/2000 8:00:00 PM
Microsoft Corporation
c:\winnt\system32\msafd.dll

mswsock.dll    5.00.2195.1207 62.77 KB (64,272
bytes) 7/27/2000 8:00:00 PM  Microsoft
Corporation    c:\winnt\system32\mswsock.dll

msgsvc.dll     5.00.2181.1    33.77 KB (34,576
bytes) 7/27/2000 8:00:00 PM  Microsoft
Corporation    c:\winnt\system32\msgsvc.dll

browser.dll    5.00.2142.1    48.27 KB (49,424
bytes) 7/27/2000 8:00:00 PM  Microsoft
Corporation    c:\winnt\system32\browser.dll

alrsvc.dll     5.00.2134.1    17.77 KB (18,192
bytes) 7/27/2000 8:00:00 PM  Microsoft
Corporation    c:\winnt\system32\alrsvc.dll

trkwks.dll     5.00.2166.1    88.77 KB (90,896
bytes) 7/27/2000 8:00:00 PM  Microsoft
Corporation    c:\winnt\system32\trkwks.dll

seclogon.dll   5.00.2135.1    15.77 KB (16,144
bytes) 7/27/2000 8:00:00 PM  Microsoft
Corporation    c:\winnt\system32\seclogon.dll

psbase.dll     5.00.2195.1600 111.77 KB
(114,448 bytes)        7/27/2000 8:00:00 PM
Microsoft Corporation
c:\winnt\system32\psbase.dll

cryptsvc.dll   5.00.2181.1    61.77 KB (63,248
bytes) 7/27/2000 8:00:00 PM  Microsoft
Corporation    c:\winnt\system32\cryptsvc.dll

cryptdll.dll   5.00.2135.1    43.27 KB (44,304
bytes) 7/27/2000 8:00:00 PM  Microsoft
Corporation    c:\winnt\system32\cryptdll.dll

wkssvc.dll     5.00.2195.1175 95.27 KB (97,552
bytes) 7/27/2000 8:00:00 PM  Microsoft
Corporation    c:\winnt\system32\wkssvc.dll

srvsvc.dll     5.00.2178.1    79.27 KB (81,168
bytes) 7/27/2000 8:00:00 PM  Microsoft
Corporation    c:\winnt\system32\srvsvc.dll

cfgmgr32.dll   5.00.2195.1608 16.77 KB (17,168
bytes) 7/27/2000 8:00:00 PM  Microsoft
Corporation    c:\winnt\system32\cfgmgr32.dll

dmserver.dll   2195.23.297.2  11.77 KB (12,048
bytes) 7/27/2000 8:00:00 PM  VERITAS Software
Corp.  c:\winnt\system32\dmserver.dll

winsta.dll     5.00.2195.32   36.27 KB (37,136
bytes) 7/27/2000 8:00:00 PM  Microsoft
Corporation    c:\winnt\system32\winsta.dll

lmhsvc.dll     5.00.2134.1    9.27 KB (9,488
bytes) 7/27/2000 8:00:00 PM  Microsoft
Corporation    c:\winnt\system32\lmhsvc.dll

dnsrslvr.dll   5.00.2195.1600 88.77 KB (90,896
bytes) 7/27/2000 8:00:00 PM  Microsoft
Corporation    c:\winnt\system32\dnsrslvr.dll

tapi32.dll     5.00.2195.1600 124.27 KB
(127,248 bytes)        7/27/2000 8:00:00 PM
Microsoft Corporation
c:\winnt\system32\tapi32.dll

rasman.dll     5.00.2188.1    54.77 KB (56,080
bytes) 7/27/2000 8:00:00 PM  Microsoft
Corporation    c:\winnt\system32\rasman.dll

rasapi32.dll   5.00.2188.1    187.77 KB
(192,272 bytes)        7/27/2000 8:00:00 PM
Microsoft Corporation
c:\winnt\system32\rasapi32.dll

rtutils.dll    5.00.2168.1    43.77 KB (44,816
bytes) 7/27/2000 8:00:00 PM  Microsoft
Corporation    c:\winnt\system32\rtutils.dll

adsldpc.dll    5.00.2195.1600 125.77 KB
(128,784 bytes)        7/27/2000 8:00:00 PM
Microsoft Corporation
c:\winnt\system32\adsldpc.dll

activeds.dll   5.00.2172.1    172.77 KB
(176,912 bytes)        7/27/2000 8:00:00 PM
Microsoft Corporation
c:\winnt\system32\activeds.dll

mprapi.dll     5.00.2181.1    79.27 KB (81,168
bytes) 7/27/2000 8:00:00 PM  Microsoft
Corporation    c:\winnt\system32\mprapi.dll

iphlpapi.dll   5.00.2173.2    67.77 KB (69,392
bytes) 7/27/2000 8:00:00 PM  Microsoft
Corporation    c:\winnt\system32\iphlpapi.dll

icmp.dll       5.00.2134.1    7.27 KB (7,440
bytes) 7/27/2000 8:00:00 PM  Microsoft
Corporation    c:\winnt\system32\icmp.dll

dhcpcsvc.dll   5.00.2195.1600 85.27 KB (87,312
bytes) 7/27/2000 8:00:00 PM  Microsoft
Corporation    c:\winnt\system32\dhcpcsvc.dll

eventlog.dll   5.00.2178.1    43.77 KB (44,816
bytes) 7/27/2000 8:00:00 PM  Microsoft
Corporation    c:\winnt\system32\eventlog.dll

ntdsapi.dll    5.00.2195.1175 56.27 KB (57,616
bytes) 7/27/2000 8:00:00 PM  Microsoft
Corporation    c:\winnt\system32\ntdsapi.dll

scesrv.dll     5.00.2188.1    225.77 KB
(231,184 bytes)        7/27/2000 8:00:00 PM
Microsoft Corporation
c:\winnt\system32\scesrv.dll

umpnpmgr.dll   5.00.2182.1    86.27 KB (88,336
bytes) 7/27/2000 8:00:00 PM  Microsoft
Corporation    c:\winnt\system32\umpnpmgr.dll

services.exe   5.00.2134.1    86.77 KB (88,848
bytes) 7/27/2000 8:00:00 PM  Microsoft
Corporation    c:\winnt\system32\services.exe

clbcatq.dll    2000.2.3465.0  496.27 KB
(508,176 bytes)        10/16/2000 2:51:16 PM
```

```
Microsoft Corporation
c:\winnt\system32\clbcatq.dll

oleaut32.dll   2.40.4514      600.27 KB
(614,672 bytes)       7/27/2000 8:00:00 PM
Microsoft Corporation
c:\winnt\system32\oleaut32.dll

netmsg.dll     5.00.2137.1    152.50 KB
(156,160 bytes)       7/27/2000 8:00:00 PM
Microsoft Corporation
c:\winnt\system32\netmsg.dll

comdlg32.dll   5.00.3103.1000 236.77 KB
(242,448 bytes)       7/27/2000 8:00:00 PM
Microsoft Corporation
c:\winnt\system32\comdlg32.dll

netui2.dll     5.00.2134.1    280.27 KB
(286,992 bytes)       7/27/2000 8:00:00 PM
Microsoft Corporation
c:\winnt\system32\netui2.dll

mprui.dll      5.00.2134.1    54.77 KB (56,080
bytes) 7/27/2000 8:00:00 PM   Microsoft
Corporation    c:\winnt\system32\mprui.dll

netui1.dll     5.00.2134.1    210.27 KB
(215,312 bytes)       7/27/2000 8:00:00 PM
Microsoft Corporation
c:\winnt\system32\netui1.dll

netui0.dll     5.00.2134.1    70.27 KB (71,952
bytes) 7/27/2000 8:00:00 PM   Microsoft
Corporation    c:\winnt\system32\netui0.dll

ntlanman.dll   5.00.2157.1    35.27 KB (36,112
bytes) 7/27/2000 8:00:00 PM   Microsoft
Corporation    c:\winnt\system32\ntlanman.dll

mpr.dll 5.00.2195.1340 53.27 KB (54,544 bytes)
7/27/2000 8:00:00 PM   Microsoft Corporation
c:\winnt\system32\mpr.dll

cscui.dll      5.00.2195.1387 227.27 KB
(232,720 bytes)       7/27/2000 8:00:00 PM
Microsoft Corporation
c:\winnt\system32\cscui.dll

winspool.drv   5.00.2195.1340 109.77 KB
(112,400 bytes)       7/27/2000 8:00:00 PM
Microsoft Corporation
c:\winnt\system32\winspool.drv

winscard.dll   5.00.2134.1    77.27 KB (79,120
bytes) 7/27/2000 8:00:00 PM   Microsoft
Corporation    c:\winnt\system32\winscard.dll

wlnotify.dll   5.00.2195.1163 53.27 KB (54,544
bytes) 7/27/2000 8:00:00 PM   Microsoft
Corporation    c:\winnt\system32\wlnotify.dll

cscdll.dll     5.00.2195.1600 98.27 KB (100,624
bytes) 7/27/2000 8:00:00 PM   Microsoft
Corporation    c:\winnt\system32\cscdll.dll

lz32.dll       5.00.2134.1    9.77 KB (10,000
bytes) 7/27/2000 8:00:00 PM   Microsoft
Corporation    c:\winnt\system32\lz32.dll

version.dll    5.00.2134.1    15.77 KB (16,144
bytes) 7/27/2000 8:00:00 PM   Microsoft
Corporation    c:\winnt\system32\version.dll

rsabase.dll    5.00.2195.1391 129.27 KB
(132,368 bytes)       7/27/2000 8:00:00 PM
Microsoft Corporation
c:\winnt\system32\rsabase.dll

mscat32.dll          5.131.2134.1          7.77 KB (7,952 bytes)
7/27/2000 8:00:00 PM          Microsoft Corporation
c:\winnt\system32\mscat32.dll
ole32.dll   5.00.2195.2500          916.77 KB (938,768 bytes)
10/16/2000 3:52:52 PM         Microsoft Corporation
c:\winnt\system32\ole32.dll
imagehlp.dll          5.00.2195.1620        120.77 KB (123,664
bytes)      7/27/2000 8:00:00 PM          Microsoft Corporation
c:\winnt\system32\imagehlp.dll
msasn1.dll 5.00.2134.1          51.27 KB (52,496 bytes)
7/27/2000 8:00:00 PM          Microsoft Corporation
c:\winnt\system32\msasn1.dll
crypt32.dll 5.131.2195.1340     464.77 KB (475,920 bytes)
7/27/2000 8:00:00 PM          Microsoft Corporation
c:\winnt\system32\crypt32.dll
wintrust.dll          5.131.2143.1          162.27 KB (166,160
bytes)      7/27/2000 8:00:00 PM          Microsoft Corporation
c:\winnt\system32\wintrust.dll
setupapi.dll          5.00.2195.1608        552.77 KB (566,032
bytes)      7/27/2000 8:00:00 PM          Microsoft Corporation
c:\winnt\system32\setupapi.dll
winmm.dll 5.00.2161.1           184.77 KB (189,200 bytes)
7/27/2000 8:00:00 PM          Microsoft Corporation
c:\winnt\system32\winmm.dll
comctl32.dll          5.81          537.77 KB (550,672 bytes)
7/27/2000 8:00:00 PM          Microsoft Corporation
c:\winnt\system32\comctl32.dll
shlwapi.dll 5.00.3103.1000      282.27 KB (289,040 bytes)
7/27/2000 8:00:00 PM          Microsoft Corporation
c:\winnt\system32\shlwapi.dll
shell32.dll 5.00.3103.1000      2.25 MB (2,358,032 bytes)
7/27/2000 8:00:00 PM          Microsoft Corporation
c:\winnt\system32\shell32.dll
msgina.dll 5.00.2195.1600       323.27 KB (331,024 bytes)
7/27/2000 8:00:00 PM          Microsoft Corporation
c:\winnt\system32\msgina.dll
wsock32.dll           5.00.2195.1207        21.27 KB (21,776 bytes)
7/27/2000 8:00:00 PM          Microsoft Corporation
c:\winnt\system32\wsock32.dll
dnsapi.dll  5.00.2195.1600      127.77 KB (130,832 bytes)
7/27/2000 8:00:00 PM          Microsoft Corporation
c:\winnt\system32\dnsapi.dll
wldap32.dll           5.00.2195.1175        155.27 KB (158,992
bytes)      7/27/2000 8:00:00 PM          Microsoft Corporation
c:\winnt\system32\wldap32.dll
ws2help.dll           5.00.2134.1           17.77 KB (18,192 bytes)
7/27/2000 8:00:00 PM          Microsoft Corporation
c:\winnt\system32\ws2help.dll
ws2_32.dll 5.00.2195.1340       68.77 KB (70,416 bytes)
7/27/2000 8:00:00 PM          Microsoft Corporation
c:\winnt\system32\ws2_32.dll
samlib.dll  5.00.2195.1175      46.27 KB (47,376 bytes)
7/27/2000 8:00:00 PM          Microsoft Corporation
c:\winnt\system32\samlib.dll
netrap.dll  5.00.2134.1         11.27 KB (11,536 bytes)
7/27/2000 8:00:00 PM          Microsoft Corporation
c:\winnt\system32\netrap.dll
netapi32.dll          5.00.2195.1600        303.27 KB (310,544
bytes)      7/27/2000 8:00:00 PM          Microsoft Corporation
c:\winnt\system32\netapi32.dll
profmap.dll           5.00.2181.1           29.27 KB (29,968 bytes)
7/27/2000 8:00:00 PM          Microsoft Corporation
c:\winnt\system32\profmap.dll
secur32.dll 5.00.2195.1600      47.27 KB (48,400 bytes)
7/27/2000 8:00:00 PM          Microsoft Corporation
c:\winnt\system32\secur32.dll
sfc.dll       5.00.2195.1618        85.27 KB (87,312 bytes)
7/27/2000 8:00:00 PM          Microsoft Corporation
c:\winnt\system32\sfc.dll
nddeapi.dll           5.00.2137.1           15.27 KB (15,632 bytes)
7/27/2000 8:00:00 PM          Microsoft Corporation
c:\winnt\system32\nddeapi.dll
```

userenv.dll 5.00.2195.1600 359.27 KB (367,888 bytes) 7/27/2000 8:00:00 PM Microsoft Corporation c:\winnt\system32\userenv.dll
user32.dll 5.00.2195.1600 392.77 KB (402,192 bytes) 7/27/2000 8:00:00 PM Microsoft Corporation c:\winnt\system32\user32.dll
gdi32.dll 5.00.2195.1340 228.77 KB (234,256 bytes) 7/27/2000 8:00:00 PM Microsoft Corporation c:\winnt\system32\gdi32.dll
rpcrt4.dll 5.00.2195.1615 436.27 KB (446,736 bytes) 7/27/2000 8:00:00 PM Microsoft Corporation c:\winnt\system32\rpcrt4.dll
advapi32.dll 5.00.2195.1600 349.27 KB (357,648 bytes) 7/27/2000 8:00:00 PM Microsoft Corporation c:\winnt\system32\advapi32.dll
kernel32.dll 5.00.2195.1600 713.27 KB (730,384 bytes) 7/27/2000 8:00:00 PM Microsoft Corporation c:\winnt\system32\kernel32.dll
msvcrt.dll 6.10.8637.0 288.09 KB (295,000 bytes) 7/27/2000 8:00:00 PM Microsoft Corporation c:\winnt\system32\msvcrt.dll
winlogon.exe 5.00.2195.1600 172.77 KB (176,912 bytes) 7/27/2000 8:00:00 PM Microsoft Corporation c:\winnt\system32\winlogon.exe
sfcfiles.dll 5.00.2195.1620 885.27 KB (906,512 bytes) 7/27/2000 8:00:00 PM Microsoft Corporation c:\winnt\system32\sfcfiles.dll
ntdll.dll 5.00.2195.1600 475.27 KB (486,672 bytes) 7/27/2000 8:00:00 PM Microsoft Corporation c:\winnt\system32\ntdll.dll
smss.exe 5.00.2195.31 44.27 KB (45,328 bytes) 7/27/2000 8:00:00 PM Microsoft Corporation c:\winnt\system32\smss.exe

[Services]

Display Name Name State Start Mode Service Type Path Error Control Start Name Tag ID
Alerter Alerter Running Auto Share Process c:\winnt\system32\services.exe Normal LocalSystem 0
Application Management AppMgmt Running Manual Share Process c:\winnt\system32\services.exe Normal LocalSystem 0
Computer Browser Browser Running Auto Share Process c:\winnt\system32\services.exe Normal LocalSystem 0
Indexing Service cisvc Stopped Manual Share Process c:\winnt\system32\cisvc.exe Normal LocalSystem 0
ClipBook ClipSrv Stopped Manual Own Process c:\winnt\system32\clipsrv.exe Normal LocalSystem 0
Distributed File System Dfs Running Auto Own Process c:\winnt\system32\dfssvc.exe Normal LocalSystem 0
DHCP Client Dhcp Running Auto Share Process c:\winnt\system32\services.exe Normal LocalSystem 0
Logical Disk Manager Administrative Service dmadmin Stopped Manual Share Process c:\winnt\system32\dmadmin.exe /com Normal LocalSystem 0
Logical Disk Manager dmserver Running Auto Share Process c:\winnt\system32\services.exe Normal LocalSystem 0
DNS Client Dnscache Running Auto Share Process c:\winnt\system32\services.exe Normal LocalSystem 0
Event Log Eventlog Running Auto Share Process c:\winnt\system32\services.exe Normal LocalSystem 0
COM+ Event System EventSystem Running Manual Share Process c:\winnt\system32\svchost.exe -k netsvcs Normal LocalSystem 0
Fax Service Fax Stopped Manual Own Process c:\winnt\system32\faxsvc.exe Normal LocalSystem 0
cLAN Connection Manager GniConMgr Running Auto Own Process c:\winnt\system32\gnconmgr.exe Normal LocalSystem 0
Intersite Messaging IsmServ Stopped Disabled Own Process c:\winnt\system32\ismserv.exe Normal LocalSystem 0
Kerberos Key Distribution Center kdc Stopped Disabled Share Process c:\winnt\system32\lsass.exe Normal LocalSystem 0
Server lanmanserver Running Auto Share Process c:\winnt\system32\services.exe Normal LocalSystem 0
Workstation lanmanworkstation Running Auto Share Process c:\winnt\system32\services.exe Normal LocalSystem 0
License Logging Service LicenseService Running Auto Own Process c:\winnt\system32\llssrv.exe Normal LocalSystem 0
TCP/IP NetBIOS Helper Service LmHosts Running Auto Share Process c:\winnt\system32\services.exe Normal LocalSystem 0
Messenger Messenger Running Auto Share Process c:\winnt\system32\services.exe Normal LocalSystem 0
NetMeeting Remote Desktop Sharing mnmsrvc Stopped Manual Own Process c:\winnt\system32\mnmsrvc.exe Normal LocalSystem 0
Distributed Transaction Coordinator MSDTC Running Auto Own Process c:\winnt\system32\msdtc.exe Normal LocalSystem 0
Windows Installer MSIServer Stopped Manual Share Process c:\winnt\system32\msiexec.exe /v Normal LocalSystem 0
MSSQLSERVER MSSQLSERVER Stopped Manual Own Process c:\progra~1\micros~2\mssql\binn\sqlservr.exe Normal LocalSystem 0
MSSQLServerADHelper MSSQLServerADHelper Stopped Manual Own Process c:\program files\microsoft sql server\80\tools\binn\sqladhlp.exe Normal LocalSystem 0
Network DDE NetDDE Stopped Manual Share Process c:\winnt\system32\netdde.exe Normal LocalSystem 0
Network DDE DSDM NetDDEdsdm Stopped Manual Share Process c:\winnt\system32\netdde.exe Normal LocalSystem 0
Net Logon Netlogon Stopped Manual Share Process c:\winnt\system32\lsass.exe Normal LocalSystem 0
Network Connections Netman Running Manual Share Process c:\winnt\system32\svchost.exe -k netsvcs Normal LocalSystem 0
File Replication NtFrs Stopped Manual Own Process c:\winnt\system32\ntfrs.exe Ignore LocalSystem 0
NT LM Security Support Provider NtLmSsp Running Manual Share Process c:\winnt\system32\lsass.exe Normal LocalSystem 0
Removable Storage NtmsSvc Running Auto Share Process c:\winnt\system32\svchost.exe -k netsvcs Normal LocalSystem 0
Plug and Play PlugPlay Running Auto Share Process c:\winnt\system32\services.exe Normal LocalSystem 0
IPSEC Policy Agent PolicyAgent Running Auto Share Process c:\winnt\system32\lsass.exe Normal LocalSystem 0
Process Control Service ProcCon Running Auto Own Process c:\winnt\system32\procconsvc.exe Normal LocalSystem 0

Protected Storage ProtectedStorage Running Auto Share Process c:\winnt\system32\services.exe Normal LocalSystem 0
Remote Access Auto Connection Manager RasAuto Stopped Manual Share Process c:\winnt\system32\svchost.exe -k netsvcs Normal LocalSystem 0
Remote Access Connection Manager RasMan Stopped Manual Share Process c:\winnt\system32\svchost.exe -k netsvcs Normal LocalSystem 0
Routing and Remote Access RemoteAccess Stopped Disabled Share Process c:\winnt\system32\svchost.exe -k netsvcs Normal LocalSystem 0
Remote Registry Service RemoteRegistry Running Auto Own Process c:\winnt\system32\regsvc.exe Normal LocalSystem 0
Remote Procedure Call (RPC) Locator RpcLocator Stopped Manual Own Process c:\winnt\system32\locator.exe Normal LocalSystem 0
Remote Procedure Call (RPC) RpcSs Running Auto Share Process c:\winnt\system32\svchost -k rpcss Normal LocalSystem 0
Remote Shell Service RshSvc Running Auto Own Process c:\winnt\system32\rshsvc.exe Normal LocalSystem 0
QoS RSVP RSVP Running Manual Own Process c:\winnt\system32\rsvp.exe -s Normal LocalSystem 0
Security Accounts Manager SamSs Running Auto Share Process c:\winnt\system32\lsass.exe Normal LocalSystem 0
Smart Card Helper SCardDrv Stopped Manual Share Process c:\winnt\system32\scardsvr.exe Ignore LocalSystem 0
Smart Card SCardSvr Stopped Manual Share Process c:\winnt\system32\scardsvr.exe Ignore LocalSystem 0
Task Scheduler Schedule Running Auto Share Process c:\winnt\system32\mstask.exe Normal LocalSystem 0
RunAs Service seclogon Running Auto Share Process c:\winnt\system32\services.exe Ignore LocalSystem 0
System Event Notification SENS Running Auto Share Process c:\winnt\system32\svchost.exe -k netsvcs Normal LocalSystem 0
ServeRAID Manager Agent ServeRAIDManagerAgent Running Auto Own Process c:\program files\raidman\raidserv.exe Normal LocalSystem 0
Internet Connection Sharing SharedAccess Stopped Manual Share Process c:\winnt\system32\svchost.exe -k netsvcs Normal LocalSystem 0
Simple TCP/IP Services SimpTcp Running Auto Share Process c:\winnt\system32\tcpsvcs.exe Normal LocalSystem 0
Print Spooler Spooler Running Auto Own Process c:\winnt\system32\spoolsv.exe Normal LocalSystem 0
SQLSERVERAGENT SQLSERVERAGENT Stopped Manual Own Process c:\progra~1\micros~2\mssql\binn\sqlagent.exe Normal LocalSystem 0
Performance Logs and Alerts SysmonLog Stopped Manual Own Process c:\winnt\system32\smlogsvc.exe Normal LocalSystem 0
Telephony TapiSrv Running Manual Share Process c:\winnt\system32\svchost.exe -k tapisrv Normal LocalSystem 0
Terminal Services TermService Stopped Disabled Own Process c:\winnt\system32\termsrv.exe Normal LocalSystem 0
Telnet TlntSvr Stopped Manual Own Process c:\winnt\system32\tlntsvr.exe Normal LocalSystem 0
Distributed Link Tracking Server TrkSvr Stopped Manual Share Process c:\winnt\system32\services.exe Normal LocalSystem 0
Distributed Link Tracking Client TrkWks Running Auto Share Process c:\winnt\system32\services.exe Normal LocalSystem 0
Uninterruptible Power Supply UPS Stopped Manual Own Process c:\winnt\system32\ups.exe Normal LocalSystem 0
Utility Manager UtilMan Stopped Manual Own Process c:\winnt\system32\utilman.exe Normal LocalSystem 0
Windows Time W32Time Stopped Manual Share Process c:\winnt\system32\services.exe Normal LocalSystem 0
Windows Management Instrumentation WinMgmt Running Auto Own Process c:\winnt\system32\wbem\winmgmt.exe Ignore LocalSystem 0
Windows Internet Name Service (WINS) WINS Running Auto Own Process c:\winnt\system32\wins.exe Normal LocalSystem 0
Windows Management Instrumentation Driver Extensions Wmi Running Manual Share Process c:\winnt\system32\services.exe Normal LocalSystem 0

[Program Groups]

Group Name Name User Name
Accessories Default User:Accessories Default User
Accessories\Accessibility Default User:Accessories\Accessibility Default User
Accessories\Entertainment Default User:Accessories\Entertainment Default User
Accessories\System Tools Default User:Accessories\System Tools Default User
Startup Default User:Startup Default User
Accessories All Users:Accessories All Users
Accessories\Accessibility All Users:Accessories\Accessibility All Users
Accessories\Communications All Users:Accessories\Communications All Users
Accessories\Entertainment All Users:Accessories\Entertainment All Users
Accessories\Games All Users:Accessories\Games All Users
Accessories\System Tools All Users:Accessories\System Tools All Users
Administrative Tools All Users:Administrative Tools All Users
Microsoft SQL Server All Users:Microsoft SQL Server All Users
ServeRAID Manager All Users:ServeRAID Manager All Users
Startup All Users:Startup All Users
Accessories SGNODE01\Administrator:Accessories SGNODE01\Administrator
Accessories\Accessibility SGNODE01\Administrator:Accessories\Accessibility SGNODE01\Administrator
Accessories\Entertainment SGNODE01\Administrator:Accessories\Entertainment SGNODE01\Administrator
Accessories\System Tools SGNODE01\Administrator:Accessories\System Tools SGNODE01\Administrator
Administrative Tools SGNODE01\Administrator:Administrative Tools SGNODE01\Administrator
Startup SGNODE01\Administrator:Startup SGNODE01\Administrator

[Startup Programs]

Program Command User Name Location
synctime synctime.cmd SGNODE01\Administrator Startup

Service Manager
c:\progra~1\micros~2\80\tools\binn\sqlmangr.exe /n All Users Common Startup

[OLE Registration]

Object Local Server
Sound (OLE2) sndrec32.exe
Media Clip mplay32.exe
Video Clip mplay32.exe /avi
MIDI Sequence mplay32.exe /mid
Sound Not Available
Media Clip Not Available
Image Document "C:\Program Files\Windows NT\Accessories\ImageVue\KodakImg.exe"
WordPad Document "%ProgramFiles%\Windows NT\Accessories\WORDPAD.EXE"
Windows Media Services DRM Storage object Not Available
Bitmap Image mspaint.exe

[Internet Explorer 5]

[Following are sub-categories of this main category]

[Summary]

Item Value
Version 5.00.3103.1000
Build 53103.1000
Product ID 51891-000-0000007-05809
Application Path C:\Program Files\Internet Explorer
Language English (United States)
Active Printer Not Available

Cipher Strength 56-bit
Content Advisor Disabled
IEAK Install No

[File Versions]

File Version Size Date Path Company
advapi32.dll 5.0.2195.1600 349 KB 7/27/2000 7:00:00 PM C:\WINNT\system32 Microsoft Corporation
advpack.dll 5.0.3103.1000 87 KB 7/27/2000 7:00:00 PM C:\WINNT\system32 Microsoft Corporation
browselc.dll 5.0.3103.1000 35 KB 7/27/2000 7:00:00 PM C:\WINNT\system32 Microsoft Corporation
browseui.dll 5.0.3103.1000 789 KB 7/27/2000 7:00:00 PM C:\WINNT\system32 Microsoft Corporation
ckcnv.exe 5.0.2195.1600 9 KB 7/27/2000 7:00:00 PM C:\WINNT\system32 Microsoft Corporation
comctl32.dll 5.81.3103.1000 538 KB 7/27/2000 7:00:00 PM C:\WINNT\system32 Microsoft Corporation
crypt32.dll 5.131.2195.1340 465 KB 7/27/2000 7:00:00 PM C:\WINNT\system32 Microsoft Corporation
enhsig.dll <File Missing> Not Available Not Available Not Available Not Available
iemigrat.dll <File Missing> Not Available Not Available Not Available Not Available
iesetup.dll 5.0.3103.1000 57 KB 7/27/2000 7:00:00 PM C:\WINNT\system32 Microsoft Corporation
iexplore.exe 5.0.3103.1000 59 KB 7/27/2000 7:00:00 PM C:\Program Files\Internet Explorer Microsoft Corporation
imagehlp.dll 5.0.2195.1620 121 KB 7/27/2000 7:00:00 PM C:\WINNT\system32 Microsoft Corporation
imghelp.dll <File Missing> Not Available Not Available Not Available Not Available
inseng.dll 5.0.3103.1000 72 KB 7/27/2000 7:00:00 PM C:\WINNT\system32 Microsoft Corporation
jobexec.dll 5.0.0.1 47 KB 7/27/2000 7:00:00 PM C:\WINNT\system32 Microsoft Corporation
jscript.dll 5.1.0.5010 476 KB 7/27/2000 7:00:00 PM C:\WINNT\system32 Microsoft Corporation
jsproxy.dll 5.0.3103.1000 13 KB 7/27/2000 7:00:00 PM C:\WINNT\system32 Microsoft Corporation
msaahtml.dll <File Missing> Not Available Not Available Not Available Not Available
mshtml.dll 5.0.3103.1000 2292 KB 7/27/2000 7:00:00 PM C:\WINNT\system32 Microsoft Corporation
msjava.dll 5.0.3310.0 922 KB 7/27/2000 7:00:00 PM C:\WINNT\system32 Microsoft Corporation
msoss.dll <File Missing> Not Available Not Available Not Available Not Available
msxml.dll 8.0.5226.0 506 KB 7/27/2000 7:00:00 PM C:\WINNT\system32 Microsoft Corporation
occache.dll 5.0.3103.1000 86 KB 7/27/2000 7:00:00 PM C:\WINNT\system32 Microsoft Corporation
ole32.dll 5.0.2195.2500 917 KB 10/16/2000 2:52:52 PM C:\WINNT\system32 Microsoft Corporation
oleaut32.dll 2.40.4514.1 600 KB 7/27/2000 7:00:00 PM C:\WINNT\system32 Microsoft Corporation
olepro32.dll 5.0.4514.1 160 KB 7/27/2000 7:00:00 PM C:\WINNT\system32 Microsoft Corporation
rsabase.dll 5.0.2195.1391 129 KB 7/27/2000 7:00:00 PM C:\WINNT\system32 Microsoft Corporation
rsaenh.dll <File Missing> Not Available Not Available Not Available Not Available
rsapi32.dll <File Missing> Not Available Not Available Not Available Not Available
rsasig.dll <File Missing> Not Available Not Available Not Available Not Available
schannel.dll 5.0.2195.0 137 KB 7/27/2000 7:00:00 PM C:\WINNT\system32 Microsoft Corporation
shdoc401.dll <File Missing> Not Available Not Available Not Available Not Available
shdocvw.dll 5.0.3103.1000 1078 KB 7/27/2000 7:00:00 PM C:\WINNT\system32 Microsoft Corporation
shell32.dll 5.0.3103.1000 2303 KB 7/27/2000 7:00:00 PM C:\WINNT\system32 Microsoft Corporation
shlwapi.dll 5.0.3103.1000 282 KB 7/27/2000 7:00:00 PM C:\WINNT\system32 Microsoft Corporation
url.dll 5.0.3103.1000 82 KB 7/27/2000 7:00:00 PM C:\WINNT\system32 Microsoft Corporation
urlmon.dll 5.0.3103.1000 441 KB 7/27/2000 7:00:00 PM C:\WINNT\system32 Microsoft Corporation
vbscript.dll 5.1.0.5010 428 KB 7/27/2000 7:00:00 PM C:\WINNT\system32 Microsoft Corporation
webcheck.dll 5.0.3103.1000 252 KB 7/27/2000 7:00:00 PM C:\WINNT\system32 Microsoft Corporation
win.com 5.0.2134.1 24 KB 7/27/2000 7:00:00 PM C:\WINNT\system32 Microsoft Corporation
wininet.dll 5.0.3103.1000 457 KB 7/27/2000 7:00:00 PM C:\WINNT\system32 Microsoft Corporation
winsock.dll 3.10.0.103 3 KB 7/27/2000 7:00:00 PM C:\WINNT\system32 Microsoft Corporation
wintrust.dll 5.131.2143.1 162 KB 7/27/2000 7:00:00 PM C:\WINNT\system32 Microsoft Corporation
wsock.vxd <File Missing> Not Available Not Available Not Available Not Available
wsock32.dll 5.0.2195.1207 21 KB 7/27/2000 7:00:00 PM C:\WINNT\system32 Microsoft Corporation
wsock32n.dll <File Missing> Not Available Not Available Not Available Not Available

[Connectivity]

Item Value
Connection Preference Never dial
EnableHttp1.1 1
ProxyHttp1.1 0

LAN Settings

AutoConfigProxy Not Available
AutoProxyDetectMode Enabled
AutoConfigURL
Proxy Disabled
ProxyServer
ProxyOverride

[Cache]

[Following are sub-categories of this main category]

[Summary]

Item Value
Page Refresh Type Automatic
Temporary Internet Files Folder C:\Documents and Settings\Administrator\Local Settings\Temporary Internet Files
Total Disk Space 8675 MB
Available Disk Space 4875 MB
Maximum Cache Size 271 MB
Available Cache Size 271 MB

[List of Objects]

Program File Status CodeBase
No cached object information available

[Content]

[Following are sub-categories of this main category]

[Summary]

Item Value
Content Advisor Disabled

[Personal Certificates]

Issued To Issued By Validity Signature Algorithm
Administrator Administrator 2/8/2001 to 1/15/2101 sha1RSA

[Other People Certificates]

Issued To Issued By Validity Signature Algorithm
No other people certificate information available

[Publishers]

Name
No publisher information available

[Security]

Zone Security Level
Local intranet Medium-low
Trusted sites Low
Internet Medium
Restricted sites High

Client Configuration

Transaction Monitor: COM+ Settings on Clients

SYTPTUNE.TXT

Transaction Monitor: COM+ Settings on Clients

TPCC COM+ Component settings

TPCC.AllRemoteTxns.1
Activation
Enable Object pooling
Minimum pool size 10/8
Maximum pool size 10/8
Creation timeout (ms) 300000
Enable object construction
Object construction
Constructor string 'dummy string (do not remove)'
Enable Just In Time Activation
Disable Component supports events and statistics
Disable Must be activated in caller's context

TPCC.AllTxns.1
Activation
Enable Object pooling
Minimum pool size 40/32
Maximum pool size 40/32
Creation timeout (ms) 300000
Enable object construction
Object construction
Constructor string 'dummy string (do not remove)'
Enable Just In Time Activation
Disable Component supports events and statistics
Disable Must be activated in caller's context

Windows Registry Editor Version 5.00

Windows Registry Editor Version 5.00

[HKEY_LOCAL_MACHINE\SYSTEM\CurrentControlSet\Services\InetInfo]

[HKEY_LOCAL_MACHINE\SYSTEM\CurrentControlSet\Services\InetInfo\Parameters]
"ListenBackLog"=dword:00000096
"DispatchEntries"=hex(7):4c,00,44,00,41,00,50,00,53,00,56,00,43,00,00,00,53,00,\
  4d,00,54,00,50,00,53,00,56,00,43,00,00,00,00,00
"PoolThreadLimit"=dword:000000be
"ThreadTimeout"=dword:00015180

[HKEY_LOCAL_MACHINE\SYSTEM\CurrentControlSet\Services\InetInfo\Performance]
"Library"="infoctrs.dll"
"Open"="OpenINFOPerformanceData"
"Close"="CloseINFOPerformanceData"
"Collect"="CollectINFOPerformanceData"
"Last Counter"=dword:00000bcc
"Last Help"=dword:00000bcd
"First Counter"=dword:00000b8c
"First Help"=dword:00000b8d

```
"Library Validation
Code"=hex:c2,f1,19,d5,83,58,c0,01,10,25,00,00,00,00,00,00
"WbemAdapFileTime"=hex:00,20,2b,88,67,40,bf,01
"WbemAdapFileSize"=dword:00002510
"WbemAdapStatus"=dword:00000000

Windows Registry Editor Version 5.00

[HKEY_LOCAL_MACHINE\SOFTWARE\Microsoft\TPCC]
"Path"="c:\\inetpub\\wwwroot\\"
"NumberOfDeliveryThreads"=dword:00000009
"MaxConnections"=dword:00002710
"MaxPendingDeliveries"=dword:000003e8
"DB_Protocol"="ODBC"
"TxnMonitor"="COM"
"DbServer"="serv1"
"DbName"="tpcc"
"DbUser"="sa"
"DbPassword"=""
"COM_SinglePool"="YES"

Windows Registry Editor Version 5.00

[HKEY_LOCAL_MACHINE\SYSTEM\CurrentControlSet\Services\W
3SVC]
"Type"=dword:00000020
"Start"=dword:00000002
"ErrorControl"=dword:00000001
"ImagePath"=hex(2):43,00,3a,00,5c,00,57,00,49,00,4e,00,4e,00,54,00,
5c,00,53,00,\

79,00,73,00,74,00,65,00,6d,00,33,00,32,00,5c,00,69,00,6e,00,65,00,7
4,00,73,\

00,72,00,76,00,5c,00,69,00,6e,00,65,00,74,00,69,00,6e,00,66,00,6f,00
,2e,00,\
  65,00,78,00,65,00,00,00
"DisplayName"="World Wide Web Publishing Service"
"DependOnService"=hex(7):49,00,49,00,53,00,41,00,44,00,4d,00,49,0
0,4e,00,00,00,\
  00,00
"DependOnGroup"=hex(7):00,00
"ObjectName"="LocalSystem"
"Description"="Provides Web connectivity and administration through
the Internet Information Services snap-in."

[HKEY_LOCAL_MACHINE\SYSTEM\CurrentControlSet\Services\W
3SVC\ASP]
"NOTE"="This is for backward compatibility only."

[HKEY_LOCAL_MACHINE\SYSTEM\CurrentControlSet\Services\W
3SVC\ASP\Parameters]

[HKEY_LOCAL_MACHINE\SYSTEM\CurrentControlSet\Services\W
3SVC\Parameters]
"MajorVersion"=dword:00000005
"MinorVersion"=dword:00000000
"InstallPath"="C:\\WINNT\\System32\\inetsrv"
"CertMapList"="C:\\WINNT\\System32\\inetsrv\\iiscrmap.dll"
"AccessDeniedMessage"="Error: Access is Denied."
"Filter DLLs"=""
"LogFileDirectory"="C:\\WINNT\\System32\\LogFiles"
"AcceptExOutstanding"=dword:00000028

[HKEY_LOCAL_MACHINE\SYSTEM\CurrentControlSet\Services\W
3SVC\Parameters\Script Map]

[HKEY_LOCAL_MACHINE\SYSTEM\CurrentControlSet\Services\W
3SVC\Parameters\Virtual Roots]
"/"="c:\\inetpub\\wwwroot,,205"
"/Scripts"="c:\\inetpub\\scripts,,1"
"/IISHelp"="c:\\winnt\\help\\iishelp,,1"
"/IISAdmin"="C:\\WINNT\\System32\\inetsrv\\iisadmin,,1"
"/IISSamples"="c:\\inetpub\\iissamples,,1"
"/MSADC"="c:\\program files\\common files\\system\\msadc,,1"
"/_vti_bin"="C:\\Program Files\\Common Files\\Microsoft
Shared\\Web Server Extensions\\40\\isapi,,1"
"/Rpc"="C:\\WINNT\\System32\\RpcProxy,,1"
"/Printers"="C:\\WINNT\\web\\printers,,201"

[HKEY_LOCAL_MACHINE\SYSTEM\CurrentControlSet\Services\W
3SVC\Performance]
"Library"="w3ctrs.dll"
"Open"="OpenW3PerformanceData"
"Close"="CloseW3PerformanceData"
"Collect"="CollectW3PerformanceData"
"Last Counter"=dword:00000c70
"Last Help"=dword:00000c71
"First Counter"=dword:00000bce
"First Help"=dword:00000bcf
"Library Validation
Code"=hex:b0,e3,f5,d7,83,58,c0,01,10,3d,00,00,00,00,00,00
"WbemAdapFileTime"=hex:00,20,2b,88,67,40,bf,01
"WbemAdapFileSize"=dword:00003d10
"WbemAdapStatus"=dword:00000000

[HKEY_LOCAL_MACHINE\SYSTEM\CurrentControlSet\Services\W
3SVC\Security]
"Security"=hex:01,00,14,80,a0,00,00,00,ac,00,00,00,14,00,00,00,30,0
0,00,00,02,\

00,1c,00,01,00,00,00,02,80,14,00,ff,01,0f,00,01,01,00,00,00,00,00,01,
00,00,\

00,00,02,00,70,00,04,00,00,00,00,00,18,00,fd,01,02,00,01,01,00,00,0
0,00,00,\

05,12,00,00,00,74,00,6f,00,00,00,1c,00,ff,01,0f,00,01,02,00,00,00,00,
00,05,\

20,00,00,00,20,02,00,00,72,00,73,00,00,00,18,00,8d,01,02,00,01,01,0
0,00,00,\

00,00,05,0b,00,00,00,20,02,00,00,00,00,1c,00,fd,01,02,00,01,02,00,0
0,00,00,\

00,05,20,00,00,00,23,02,00,00,72,00,73,00,01,01,00,00,00,00,00,05,1
2,00,00,\
  00,01,01,00,00,00,00,00,05,12,00,00,00

[HKEY_LOCAL_MACHINE\SYSTEM\CurrentControlSet\Services\W
3SVC\Enum]
"0"="Root\\LEGACY_W3SVC\\0000"
"Count"=dword:00000001
"NextInstance"=dword:00000001
```

System Information Report for Clients

Netfinity 5100

This system configuration inventory was obtained from 1 of 8 clients (Netfinity 5100).

All 8 clients are identically configured.
System Information report written at: 03/19/2001 02:09:05 PM
[System Information]

[Following are sub-categories of this main category]

[System Summary]

Item Value
OS Name Microsoft Windows 2000 Server
Version 5.0.2195 Build 2195
OS Manufacturer Microsoft Corporation
System Name RTCLIENT64
System Manufacturer IBM
System Model Netfinity 5100 -[86582RY]-
System Type X86-based PC
Processor x86 Family 6 Model 8 Stepping 3 GenuineIntel ~731 Mhz
Processor x86 Family 6 Model 8 Stepping 3 GenuineIntel ~731 Mhz
BIOS Version IBM BIOS Ver 3.0
Windows Directory C:\WINNT
System Directory C:\WINNT\System32
Boot Device \Device\Harddisk0\Partition1
Locale United States
User Name RTCLIENT64\tpcc
Time Zone Eastern Standard Time
Total Physical Memory 523,796 KB
Available Physical Memory 429,364 KB
Total Virtual Memory 1,801,936 KB
Available Virtual Memory 1,635,996 KB
Page File Space 1,278,140 KB
Page File C:\pagefile.sys

[Hardware Resources]

[Following are sub-categories of this main category]

[Conflicts/Sharing]

Resource Device
No conflicted/shared resources

[DMA]

Channel Device Status
2 Standard floppy disk controller OK
4 Direct memory access controller OK

[Forced Hardware]

Device PNP Device ID
No Forced Hardware

[I/O]

Address Range Device Status
0x0000-0x0CF7 PCI bus OK
0x0000-0x0CF7 Direct memory access controller OK
0x0D00-0x4AEB PCI bus OK
0x82E8-0xFFFF PCI bus OK
0x03B0-0x03BB S3 Inc. Savage4 OK
0x03C0-0x03DF S3 Inc. Savage4 OK
0x2000-0x201F IBM Netfinity Fault Tolerance PCI Adapter OK
0x0A79-0x0A79 ISAPNP Read Data Port OK
0x0279-0x0279 ISAPNP Read Data Port OK
0x02F4-0x02F7 ISAPNP Read Data Port OK
0x0060-0x0060 Standard 101/102-Key or Microsoft Natural PS/2 Keyboard OK
0x0064-0x0064 Standard 101/102-Key or Microsoft Natural PS/2 Keyboard OK
0x03F0-0x03F5 Standard floppy disk controller OK
0x03F7-0x03F7 Standard floppy disk controller OK
0x0378-0x037F Printer Port (LPT1) OK
0x03F8-0x03FF Communications Port (COM1) OK
0x02F8-0x02FF Communications Port (COM2) OK
0x0020-0x0021 Advanced programmable interrupt controller OK
0x00A0-0x00A1 Advanced programmable interrupt controller OK
0x04D0-0x04D1 Advanced programmable interrupt controller OK
0x0080-0x008F Direct memory access controller OK
0x00C0-0x00DF Direct memory access controller OK
0x0040-0x0043 System timer OK
0x0070-0x0073 System CMOS/real time clock OK
0x0061-0x0061 System speaker OK
0x00F0-0x00FF Numeric data processor OK
0x0F50-0x0F58 Motherboard resources OK
0xFD00-0xFD3F Motherboard resources OK
0xFE80-0xFEBF Motherboard resources OK
0xFEC0-0xFEDF Motherboard resources OK
0xEE9B-0xEE9B Motherboard resources OK
0x00E8-0x00E9 Not Available OK
0x0840-0x084F Standard Dual Channel PCI IDE Controller OK
0x01F0-0x01F7 Primary IDE Channel OK
0x03F6-0x03F6 Primary IDE Channel OK
0x0170-0x0177 Secondary IDE Channel OK
0x0376-0x0376 Secondary IDE Channel OK
0x4AEC-0x82E7 PCI bus OK
0x4B00-0x4BFF Adaptec AIC-7899 Ultra160/m PCI SCSI Card OK
0x4C00-0x4CFF Adaptec AIC-7899 Ultra160/m PCI SCSI Card OK
0x5000-0x5FFF DEC 21152 PCI to PCI bridge OK
0x5100-0x511F Intel(R) PRO/100+ Dual Port Server Adapter #3 OK
0x5120-0x513F Intel(R) PRO/100+ Dual Port Server Adapter #4 OK

[IRQs]

IRQ Number Device
30 Microsoft ACPI-Compliant System
31 S3 Inc. Savage4
27 IBM Netfinity Fault Tolerance PCI Adapter
1 Standard 101/102-Key or Microsoft Natural PS/2 Keyboard
12 PS/2 Compatible Mouse
6 Standard floppy disk controller
4 Communications Port (COM1)
3 Communications Port (COM2)
8 System CMOS/real time clock
13 Numeric data processor
5 Not Available
14 Primary IDE Channel
11 Standard OpenHCD USB Host Controller
28 Adaptec AIC-7899 Ultra160/m PCI SCSI Card
29 Adaptec AIC-7899 Ultra160/m PCI SCSI Card
22 Intel(R) PRO/100+ Dual Port Server Adapter #3
23 Intel(R) PRO/100+ Dual Port Server Adapter #4

[Memory]

Range Device Status
0xC8000-0xCFFFF PCI bus OK
0xC8000-0xCFFFF System board OK
0xF0000000-0xFEBFFFFF PCI bus OK

0xF0000000-0xFEBFFFFF S3 Inc. Savage4 OK
0xFED00000-0xFEDFFFFF PCI bus OK
0xFEF00000-0xFFDFFFFF PCI bus OK
0xFEB80000-0xFEBFFFFF S3 Inc. Savage4 OK
0xA0000-0xBFFFF S3 Inc. Savage4 OK
0xFEB7FC00-0xFEB7FC1F IBM Netfinity Fault Tolerance PCI Adapter OK
0xFEC00000-0xFECFFFFF Advanced programmable interrupt controller OK
0xFEE00000-0xFEEFFFFF Advanced programmable interrupt controller OK
0xFF700000-0xFF700FFF Standard OpenHCD USB Host Controller OK
0xD0000-0xDFFFF PCI bus OK
0x20000000-0xEFFFFFFF PCI bus OK
0xEFFFF000-0xEFFFFFFF Adaptec AIC-7899 Ultra160/m PCI SCSI Card OK
0xEFFFE000-0xEFFFEFFF Adaptec AIC-7899 Ultra160/m PCI SCSI Card OK
0xEE000000-0xEFAFFFFF DEC 21152 PCI to PCI bridge OK
0xED800000-0xEDFFFFFF DEC 21152 PCI to PCI bridge OK
0xEFA00000-0xEFA00FFF Intel(R) PRO/100+ Dual Port Server Adapter #3 OK
0xEF800000-0xEF8FFFFF Intel(R) PRO/100+ Dual Port Server Adapter #3 OK
0xEFA01000-0xEFA01FFF Intel(R) PRO/100+ Dual Port Server Adapter #4 OK
0xEF900000-0xEF9FFFFF Intel(R) PRO/100+ Dual Port Server Adapter #4 OK
0x0000-0x9FFFF System board OK
0x100000-0xFFFFFF System board OK
0x1000000-0x1FFFFFFF System board OK
0xE0000-0xFFFFF System board OK
0xFFFE0000-0xFFFFFFFF System board OK
0xCC000-0xCFFFF System board OK

[Components]

[Following are sub-categories of this main category]

[Multimedia]

[Following are sub-categories of this main category]

[Audio Codecs]

Codec Manufacturer Description Status File Version Size Creation Date
c:\winnt\system32\iac25_32.ax Intel Corporation Indeo® audio software OK C:\WINNT\System32\IAC25_32.AX 2.05.53 195.00 KB (199,680 bytes) 12/7/1999 7:00:00 AM
c:\winnt\system32\msg723.acm Microsoft Corporation OK C:\WINNT\System32\MSG723.ACM 4.4.3385 106.77 KB (109,328 bytes) 11/13/2000 10:26:20 AM
c:\winnt\system32\lhacm.acm Microsoft Corporation OK C:\WINNT\System32\LHACM.ACM 4.4.3385 33.27 KB (34,064 bytes) 11/13/2000 10:26:21 AM
c:\winnt\system32\tssoft32.acm DSP GROUP, INC. OK C:\WINNT\System32\TSSOFT32.ACM 1.01 9.27 KB (9,488 bytes) 12/7/1999 7:00:00 AM
c:\winnt\system32\msgsm32.acm Microsoft Corporation OK C:\WINNT\System32\MSGSM32.ACM 5.00.2134.1 22.27 KB (22,800 bytes) 12/7/1999 7:00:00 AM
c:\winnt\system32\msg711.acm Microsoft Corporation OK C:\WINNT\System32\MSG711.ACM 5.00.2134.1 10.27 KB (10,512 bytes) 12/7/1999 7:00:00 AM
c:\winnt\system32\imaadp32.acm Microsoft Corporation OK C:\WINNT\System32\IMAADP32.ACM 5.00.2134.1 16.27 KB (16,656 bytes) 12/7/1999 7:00:00 AM
c:\winnt\system32\msadp32.acm Microsoft Corporation OK C:\WINNT\System32\MSADP32.ACM 5.00.2134.1 14.77 KB (15,120 bytes) 12/7/1999 7:00:00 AM

[Video Codecs]

Codec Manufacturer Description Status File Version Size Creation Date
c:\winnt\system32\ir50_32.dll Intel Corporation Indeo® video 5.10 OK C:\WINNT\System32\IR50_32.DLL R.5.10.15.2.55 737.50 KB (755,200 bytes) 12/7/1999 7:00:00 AM
c:\winnt\system32\msh263.drv Microsoft Corporation OK C:\WINNT\System32\MSH263.DRV 4.4.3385 252.27 KB (258,320 bytes) 11/13/2000 10:25:48 AM
c:\winnt\system32\msh261.drv Microsoft Corporation OK C:\WINNT\System32\MSH261.DRV 4.4.3385 163.77 KB (167,696 bytes) 11/13/2000 10:26:21 AM
c:\winnt\system32\msvidc32.dll Microsoft Corporation OK C:\WINNT\System32\MSVIDC32.DLL 5.00.2134.1 27.27 KB (27,920 bytes) 12/7/1999 7:00:00 AM
c:\winnt\system32\ir32_32.dll Intel(R) Corporation OK C:\WINNT\System32\IR32_32.DLL Not Available 194.50 KB (199,168 bytes) 12/7/1999 7:00:00 AM
c:\winnt\system32\iccvid.dll Radius Inc. OK C:\WINNT\System32\ICCVID.DLL 1.10.0.6 108.00 KB (110,592 bytes) 12/7/1999 7:00:00 AM
c:\winnt\system32\msrle32.dll Microsoft Corporation OK C:\WINNT\System32\MSRLE32.DLL 5.00.2134.1 10.77 KB (11,024 bytes) 12/7/1999 7:00:00 AM

[CD-ROM]

Item Value
Drive D:
Description CD-ROM Drive
Media Loaded False
Media Type CD-ROM
Name LITEON CD-ROM LTN403
Manufacturer (Standard CD-ROM drives)
Status OK
Transfer Rate Not Available
SCSI Target ID 0
PNP Device ID IDE\CDROMLITEON_CD-ROM_LTN403_____D U26____\5&326853DD&0&0.0.0

[Sound Device]

Item Value
No sound devices

[Display]

Item Value
Name S3 Inc. Savage4
PNP Device ID PCI\VEN_5333&DEV_8A22&SUBSYS_01C51014&REV_04\3&267A616A&0&08
Adapter Type S3 Savage4, S3 compatible
Adapter Description S3 Inc. Savage4
Adapter RAM 8.00 MB (8,388,608 bytes)
Installed Drivers s3sav4.dll
Driver Version 5.01.840.0001
INF File s3sav4.inf (S3Inc section)

Color Planes 1
Color Table Entries 65536
Resolution 800 x 600 x 60 hertz
Bits/Pixel 16

[Infrared]

Item Value
No infrared devices

[Input]

[Following are sub-categories of this main category]

[Keyboard]

Item Value
Description Standard 101/102-Key or Microsoft Natural PS/2 Keyboard
Name Enhanced (101- or 102-key)
Layout 00000409
PNP Device ID ACPI\PNP0303\4&F0B8F99&0
NumberOfFunctionKeys 12

[Pointing Device]

Item Value
Hardware Type PS/2 Compatible Mouse
Number of Buttons 3
Status OK
PNP Device ID ACPI\PNP0F13\4&F0B8F99&0
Power Management Supported False
Double Click Threshold 6
Handedness Right Handed Operation

[Modem]

Item Value
No modems

[Network]

[Following are sub-categories of this main category]

[Adapter]

Item Value
Name [00000000] IBM Netfinity Fault Tolerance PCI Adapter
Adapter Type Ethernet 802.3
Product Name IBM Netfinity Fault Tolerance PCI Adapter
Installed True
PNP Device ID PCI\VEN_1022&DEV_2000&SUBSYS_20001014&REV_44\3&267A616A&0&10
Last Reset 3/19/2001 9:06:28 AM
Index 0
Service Name PCNet5
IP Address 192.168.127.80
IP Subnet 255.255.255.0
Default IP Gateway Not Available
DHCP Enabled False
DHCP Server Not Available
DHCP Lease Expires Not Available
DHCP Lease Obtained Not Available
MAC Address 00:06:29:D5:81:D3
Service Name PCnet
IRQ Number 27
I/O Port 0x2000-0x201F
Driver c:\winnt\system32\drivers\pcntn5m.sys (33811, 4.23.00)

Name [00000003] Intel(R) PRO/100+ Dual Port Server Adapter
Adapter Type Ethernet 802.3
Product Name Intel(R) PRO/100+ Dual Port Server Adapter
Installed True
PNP Device ID PCI\VEN_8086&DEV_1229&SUBSYS_10F08086&REV_05\4&3286C9C3&0&2030
Last Reset 3/19/2001 9:06:28 AM
Index 3
Service Name E100B
IP Address 192.168.80.99
IP Subnet 255.255.255.0
Default IP Gateway Not Available
DHCP Enabled False
DHCP Server Not Available
DHCP Lease Expires Not Available
DHCP Lease Obtained Not Available
MAC Address 00:90:27:FC:3A:84
Service Name E100B
IRQ Number 22
I/O Port 0x5100-0x511F
Driver c:\winnt\system32\drivers\e100bnt5.sys (80144, 4.01.67.0000)

Name [00000004] Intel(R) PRO/100+ Dual Port Server Adapter
Adapter Type Ethernet 802.3
Product Name Intel(R) PRO/100+ Dual Port Server Adapter
Installed True
PNP Device ID PCI\VEN_8086&DEV_1229&SUBSYS_10F08086&REV_05\4&3286C9C3&0&2830
Last Reset 3/19/2001 9:06:28 AM
Index 4
Service Name E100B
IP Address 192.168.81.99
IP Subnet 255.255.255.0
Default IP Gateway Not Available
DHCP Enabled False
DHCP Server Not Available
DHCP Lease Expires Not Available
DHCP Lease Obtained Not Available
MAC Address 00:90:27:FC:3A:85
Service Name E100B
IRQ Number 23
I/O Port 0x5120-0x513F
Driver c:\winnt\system32\drivers\e100bnt5.sys (80144, 4.01.67.0000)

Name [00000007] RAS Async Adapter
Adapter Type Not Available
Product Name RAS Async Adapter
Installed True
PNP Device ID Not Available
Last Reset 3/19/2001 9:06:28 AM
Index 7
Service Name AsyncMac
IP Address Not Available
IP Subnet Not Available
Default IP Gateway Not Available
DHCP Enabled False
DHCP Server Not Available
DHCP Lease Expires Not Available
DHCP Lease Obtained Not Available

MAC Address Not Available
Service Name Not Available

Name [00000008] WAN Miniport (L2TP)
Adapter Type Not Available
Product Name WAN Miniport (L2TP)
Installed True
PNP Device ID ROOT\MS_L2TPMINIPORT\0000
Last Reset 3/19/2001 9:06:28 AM
Index 8
Service Name Rasl2tp
IP Address Not Available
IP Subnet Not Available
Default IP Gateway Not Available
DHCP Enabled False
DHCP Server Not Available
DHCP Lease Expires Not Available
DHCP Lease Obtained Not Available
MAC Address Not Available
Service Name Rasl2tp
Driver c:\winnt\system32\drivers\rasl2tp.sys (50800, 5.00.2179.1)

Name [00000009] WAN Miniport (PPTP)
Adapter Type Wide Area Network (WAN)
Product Name WAN Miniport (PPTP)
Installed True
PNP Device ID ROOT\MS_PPTPMINIPORT\0000
Last Reset 3/19/2001 9:06:28 AM
Index 9
Service Name PptpMiniport
IP Address Not Available
IP Subnet Not Available
Default IP Gateway Not Available
DHCP Enabled False
DHCP Server Not Available
DHCP Lease Expires Not Available
DHCP Lease Obtained Not Available
MAC Address 50:50:54:50:30:30
Service Name PptpMiniport
Driver c:\winnt\system32\drivers\raspptp.sys (47856, 5.00.2160.1)

Name [00000010] Direct Parallel
Adapter Type Not Available
Product Name Direct Parallel
Installed True
PNP Device ID ROOT\MS_PTIMINIPORT\0000
Last Reset 3/19/2001 9:06:28 AM
Index 10
Service Name Raspti
IP Address Not Available
IP Subnet Not Available
Default IP Gateway Not Available
DHCP Enabled False
DHCP Server Not Available
DHCP Lease Expires Not Available
DHCP Lease Obtained Not Available
MAC Address Not Available
Service Name Raspti
Driver c:\winnt\system32\drivers\raspti.sys (16880, 5.00.2146.1)

Name [00000011] WAN Miniport (IP)
Adapter Type Not Available
Product Name WAN Miniport (IP)
Installed True
PNP Device ID ROOT\MS_NDISWANIP\0000
Last Reset 3/19/2001 9:06:28 AM
Index 11
Service Name NdisWan
IP Address Not Available
IP Subnet Not Available
Default IP Gateway Not Available
DHCP Enabled False
DHCP Server Not Available
DHCP Lease Expires Not Available
DHCP Lease Obtained Not Available
MAC Address Not Available
Service Name NdisWan
Driver c:\winnt\system32\drivers\ndiswan.sys (90768, 5.00.2184.1)

Name [00000012] IBM 10/100 EtherJet PCI Adapter
Adapter Type Not Available
Product Name IBM 10/100 EtherJet PCI Adapter
Installed True
PNP Device ID Not Available
Last Reset 3/19/2001 9:06:28 AM
Index 12
Service Name IBMFE
IP Address Not Available
IP Subnet Not Available
Default IP Gateway Not Available
DHCP Enabled False
DHCP Server Not Available
DHCP Lease Expires Not Available
DHCP Lease Obtained Not Available
MAC Address Not Available
Service Name Not Available

[Protocol]

Item Value
Name MSAFD Tcpip [TCP/IP]
ConnectionlessService False
GuaranteesDelivery True
GuaranteesSequencing True
MaximumAddressSize 16 bytes
MaximumMessageSize 0 bytes
MessageOriented False
MinimumAddressSize 16 bytes
PseudoStreamOriented False
SupportsBroadcasting False
SupportsConnectData False
SupportsDisconnectData False
SupportsEncryption False
SupportsExpeditedData True
SupportsGracefulClosing True
SupportsGuaranteedBandwidth False
SupportsMulticasting False

Name MSAFD Tcpip [UDP/IP]
ConnectionlessService True
GuaranteesDelivery False
GuaranteesSequencing False
MaximumAddressSize 16 bytes
MaximumMessageSize 65467 bytes
MessageOriented True
MinimumAddressSize 16 bytes
PseudoStreamOriented False
SupportsBroadcasting True
SupportsConnectData False
SupportsDisconnectData False
SupportsEncryption False
SupportsExpeditedData False
SupportsGracefulClosing False
SupportsGuaranteedBandwidth False

SupportsMulticasting True

Name RSVP UDP Service Provider
ConnectionlessService True
GuaranteesDelivery False
GuaranteesSequencing False
MaximumAddressSize 16 bytes
MaximumMessageSize 65467 bytes
MessageOriented True
MinimumAddressSize 16 bytes
PseudoStreamOriented False
SupportsBroadcasting True
SupportsConnectData False
SupportsDisconnectData False
SupportsEncryption True
SupportsExpeditedData False
SupportsGracefulClosing False
SupportsGuaranteedBandwidth False
SupportsMulticasting True

Name RSVP TCP Service Provider
ConnectionlessService False
GuaranteesDelivery True
GuaranteesSequencing True
MaximumAddressSize 16 bytes
MaximumMessageSize 0 bytes
MessageOriented False
MinimumAddressSize 16 bytes
PseudoStreamOriented False
SupportsBroadcasting False
SupportsConnectData False
SupportsDisconnectData False
SupportsEncryption True
SupportsExpeditedData True
SupportsGracefulClosing True
SupportsGuaranteedBandwidth False
SupportsMulticasting False

Name MSAFD NetBIOS

[\Device\NetBT_Tcpip_{0D94F72B-D8C4-4330-8E93-24430A29C603}] SEQPACKET 9
ConnectionlessService False
GuaranteesDelivery True
GuaranteesSequencing True
MaximumAddressSize 20 bytes
MaximumMessageSize 64000 bytes
MessageOriented True
MinimumAddressSize 20 bytes
PseudoStreamOriented False
SupportsBroadcasting False
SupportsConnectData False
SupportsDisconnectData False
SupportsEncryption False
SupportsExpeditedData False
SupportsGracefulClosing False
SupportsGuaranteedBandwidth False
SupportsMulticasting False

Name MSAFD NetBIOS

[\Device\NetBT_Tcpip_{0D94F72B-D8C4-4330-8E93-24430A29C603}] DATAGRAM 9
ConnectionlessService True
GuaranteesDelivery False
GuaranteesSequencing False
MaximumAddressSize 20 bytes
MaximumMessageSize 64000 bytes
MessageOriented True
MinimumAddressSize 20 bytes
PseudoStreamOriented False
SupportsBroadcasting True
SupportsConnectData False
SupportsDisconnectData False
SupportsEncryption False
SupportsExpeditedData False
SupportsGracefulClosing False
SupportsGuaranteedBandwidth False
SupportsMulticasting False

Name MSAFD NetBIOS

[\Device\NetBT_Tcpip_{30EDC51D-8BEE-442A-854F-EB2430CB698C}] SEQPACKET 4
ConnectionlessService False
GuaranteesDelivery True
GuaranteesSequencing True
MaximumAddressSize 20 bytes
MaximumMessageSize 64000 bytes
MessageOriented True
MinimumAddressSize 20 bytes
PseudoStreamOriented False
SupportsBroadcasting False
SupportsConnectData False
SupportsDisconnectData False
SupportsEncryption False
SupportsExpeditedData False
SupportsGracefulClosing False
SupportsGuaranteedBandwidth False
SupportsMulticasting False

Name MSAFD NetBIOS

[\Device\NetBT_Tcpip_{30EDC51D-8BEE-442A-854F-EB2430CB698C}] DATAGRAM 4
ConnectionlessService True
GuaranteesDelivery False
GuaranteesSequencing False
MaximumAddressSize 20 bytes
MaximumMessageSize 64000 bytes
MessageOriented True
MinimumAddressSize 20 bytes
PseudoStreamOriented False
SupportsBroadcasting True
SupportsConnectData False
SupportsDisconnectData False
SupportsEncryption False
SupportsExpeditedData False
SupportsGracefulClosing False
SupportsGuaranteedBandwidth False
SupportsMulticasting False

Name MSAFD NetBIOS

[\Device\NetBT_Tcpip_{ABE02F8E-D543-4481-9933-28B4E994C913}] SEQPACKET 3
ConnectionlessService False
GuaranteesDelivery True
GuaranteesSequencing True
MaximumAddressSize 20 bytes
MaximumMessageSize 64000 bytes
MessageOriented True
MinimumAddressSize 20 bytes
PseudoStreamOriented False
SupportsBroadcasting False
SupportsConnectData False

SupportsDisconnectData False
SupportsEncryption False
SupportsExpeditedData False
SupportsGracefulClosing False
SupportsGuaranteedBandwidth False
SupportsMulticasting False

Name MSAFD NetBIOS

[\Device\NetBT_Tcpip_{ABE02F8E-D543-4481-9933-28B4E994C913}] DATAGRAM 3
ConnectionlessService True
GuaranteesDelivery False
GuaranteesSequencing False
MaximumAddressSize 20 bytes
MaximumMessageSize 64000 bytes
MessageOriented True
MinimumAddressSize 20 bytes
PseudoStreamOriented False
SupportsBroadcasting True
SupportsConnectData False
SupportsDisconnectData False
SupportsEncryption False
SupportsExpeditedData False
SupportsGracefulClosing False
SupportsGuaranteedBandwidth False
SupportsMulticasting False

Name MSAFD NetBIOS

[\Device\NetBT_Tcpip_{7163CAD1-68F2-44F1-8D40-FE069C0B852D}] SEQPACKET 0
ConnectionlessService False
GuaranteesDelivery True
GuaranteesSequencing True
MaximumAddressSize 20 bytes
MaximumMessageSize 64000 bytes
MessageOriented True
MinimumAddressSize 20 bytes
PseudoStreamOriented False
SupportsBroadcasting False
SupportsConnectData False
SupportsDisconnectData False
SupportsEncryption False
SupportsExpeditedData False
SupportsGracefulClosing False
SupportsGuaranteedBandwidth False
SupportsMulticasting False

Name MSAFD NetBIOS

[\Device\NetBT_Tcpip_{7163CAD1-68F2-44F1-8D40-FE069C0B852D}] DATAGRAM 0
ConnectionlessService True
GuaranteesDelivery False
GuaranteesSequencing False
MaximumAddressSize 20 bytes
MaximumMessageSize 64000 bytes
MessageOriented True
MinimumAddressSize 20 bytes
PseudoStreamOriented False
SupportsBroadcasting True
SupportsConnectData False
SupportsDisconnectData False
SupportsEncryption False
SupportsExpeditedData False
SupportsGracefulClosing False
SupportsGuaranteedBandwidth False
SupportsMulticasting False

Name MSAFD NetBIOS

[\Device\NetBT_Tcpip_{BBE4B191-4DBC-47A4-8B78-1F7C7BC318DC}] SEQPACKET 7
ConnectionlessService False
GuaranteesDelivery True
GuaranteesSequencing True
MaximumAddressSize 20 bytes
MaximumMessageSize 64000 bytes
MessageOriented True
MinimumAddressSize 20 bytes
PseudoStreamOriented False
SupportsBroadcasting False
SupportsConnectData False
SupportsDisconnectData False
SupportsEncryption False
SupportsExpeditedData False
SupportsGracefulClosing False
SupportsGuaranteedBandwidth False
SupportsMulticasting False

Name MSAFD NetBIOS

[\Device\NetBT_Tcpip_{BBE4B191-4DBC-47A4-8B78-1F7C7BC318DC}] DATAGRAM 7
ConnectionlessService True
GuaranteesDelivery False
GuaranteesSequencing False
MaximumAddressSize 20 bytes
MaximumMessageSize 64000 bytes
MessageOriented True
MinimumAddressSize 20 bytes
PseudoStreamOriented False
SupportsBroadcasting True
SupportsConnectData False
SupportsDisconnectData False
SupportsEncryption False
SupportsExpeditedData False
SupportsGracefulClosing False
SupportsGuaranteedBandwidth False
SupportsMulticasting False

Name MSAFD NetBIOS

[\Device\NetBT_Tcpip_{90DA37FB-3BB6-4C69-B2FF-A5AD5CB2AC0A}] SEQPACKET 8
ConnectionlessService False
GuaranteesDelivery True
GuaranteesSequencing True
MaximumAddressSize 20 bytes
MaximumMessageSize 64000 bytes
MessageOriented True
MinimumAddressSize 20 bytes
PseudoStreamOriented False
SupportsBroadcasting False
SupportsConnectData False
SupportsDisconnectData False
SupportsEncryption False
SupportsExpeditedData False
SupportsGracefulClosing False
SupportsGuaranteedBandwidth False
SupportsMulticasting False

Name MSAFD NetBIOS

[\Device\NetBT_Tcpip_{90DA37FB-3BB6-4C69-B2FF-A5AD5CB2AC0A}] DATAGRAM 8
ConnectionlessService True
GuaranteesDelivery False
GuaranteesSequencing False
MaximumAddressSize 20 bytes
MaximumMessageSize 64000 bytes
MessageOriented True
MinimumAddressSize 20 bytes
PseudoStreamOriented False
SupportsBroadcasting True
SupportsConnectData False
SupportsDisconnectData False
SupportsEncryption False
SupportsExpeditedData False
SupportsGracefulClosing False
SupportsGuaranteedBandwidth False
SupportsMulticasting False

[WinSock]

Item Value
File c:\winnt\system32\winsock.dll
Version 3.10
Size 2.80 KB (2,864 bytes)

File c:\winnt\system32\wsock32.dll
Version 5.00.2152.1
Size 21.27 KB (21,776 bytes)

[Ports]

[Following are sub-categories of this main category]

[Serial]

Item Value
Name COM1
Status OK
PNP Device ID ACPI\PNP0501\1
Maximum Input Buffer Size 0
Maximum Output Buffer Size False
Settable Baud Rate True
Settable Data Bits True
Settable Flow Control True
Settable Parity True
Settable Parity Check True
Settable Stop Bits True
Settable RLSD True
Supports RLSD True
Supports 16 Bit Mode False
Supports Special Characters False
Baud Rate 9600
Bits/Byte 8
Stop Bits 1
Parity None
Busy 0
Abort Read/Write on Error 0
Binary Mode Enabled -1
Continue XMit on XOff 0
CTS Outflow Control 0
Discard NULL Bytes 0
DSR Outflow Control 0
DSR Sensitivity 0
DTR Flow Control Type Enable
EOF Character 0
Error Replace Character 0
Error Replacement Enabled 0
Event Character 0
Parity Check Enabled 0
RTS Flow Control Type Enable
XOff Character 19
XOffXMit Threshold 512
XOn Character 17
XOnXMit Threshold 2048
XOnXOff InFlow Control 0
XOnXOff OutFlow Control 0
IRQ Number 4
I/O Port 0x03F8-0x03FF
Driver c:\winnt\system32\drivers\serial.sys (62448, 5.00.2134.1)

Name COM2
Status OK
PNP Device ID ACPI\PNP0501\2
Maximum Input Buffer Size 0
Maximum Output Buffer Size False
Settable Baud Rate True
Settable Data Bits True
Settable Flow Control True
Settable Parity True
Settable Parity Check True
Settable Stop Bits True
Settable RLSD True
Supports RLSD True
Supports 16 Bit Mode False
Supports Special Characters False
Baud Rate 9600
Bits/Byte 8
Stop Bits 1
Parity None
Busy 0
Abort Read/Write on Error 0
Binary Mode Enabled -1
Continue XMit on XOff 0
CTS Outflow Control 0
Discard NULL Bytes 0
DSR Outflow Control 0
DSR Sensitivity 0
DTR Flow Control Type Enable
EOF Character 0
Error Replace Character 0
Error Replacement Enabled 0
Event Character 0
Parity Check Enabled 0
RTS Flow Control Type Enable
XOff Character 19
XOffXMit Threshold 512
XOn Character 17
XOnXMit Threshold 2048
XOnXOff InFlow Control 0
XOnXOff OutFlow Control 0
IRQ Number 3
I/O Port 0x02F8-0x02FF
Driver c:\winnt\system32\drivers\serial.sys (62448, 5.00.2134.1)

[Parallel]

Item Value
Name LPT1
PNP Device ID ACPI\PNP0400\1

[Storage]

[Following are sub-categories of this main category]

[Drives]

Item Value
Drive A:
Description 3 1/2 Inch Floppy Drive

Drive C:
Description Local Fixed Disk
Compressed False
File System NTFS
Size 8.47 GB (9,097,125,888 bytes)
Free Space 6.89 GB (7,398,551,552 bytes)
Volume Name
Volume Serial Number 10FFC016
Partition Disk #0, Partition #0
Partition Size 8.47 GB (9,097,127,424 bytes)
Starting Offset 32256 bytes
Drive Description Disk drive
Drive Manufacturer (Standard disk drives)
Drive Model IBM-PSG DMVS09D !# SCSI Disk Device
Drive BytesPerSector 512
Drive MediaLoaded True
Drive MediaType Fixed hard disk media
Drive Partitions 1
Drive SCSIBus 0
Drive SCSILogicalUnit 0
Drive SCSIPort 2
Drive SCSITargetId 0
Drive SectorsPerTrack 63
Drive Size 9097159680 bytes
Drive TotalCylinders 1106
Drive TotalSectors 17767890
Drive TotalTracks 282030
Drive TracksPerCylinder 255

[SCSI]

Item Value
Name Adaptec AIC-7899 Ultra160/m PCI SCSI Card
Caption Adaptec AIC-7899 Ultra160/m PCI SCSI Card
Driver adpu160m
Status OK
PNP Device ID
PCI\VEN_9005&DEV_00CF&SUBSYS_019D1014&REV_01\3&13C0B0C5&0&18
Device ID
PCI\VEN_9005&DEV_00CF&SUBSYS_019D1014&REV_01\3&13C0B0C5&0&18
Device Map Not Available
Index Not Available
Max Number Controlled Not Available
IRQ Number 28
I/O Port 0x4B00-0x4BFF
Driver c:\winnt\system32\drivers\adpu160m.sys (64432, v3.10a)

Name Adaptec AIC-7899 Ultra160/m PCI SCSI Card
Caption Adaptec AIC-7899 Ultra160/m PCI SCSI Card
Driver adpu160m
Status OK
PNP Device ID
PCI\VEN_9005&DEV_00CF&SUBSYS_019D1014&REV_01\3&13C0B0C5&0&19
Device ID
PCI\VEN_9005&DEV_00CF&SUBSYS_019D1014&REV_01\3&13C0B0C5&0&19
Device Map Not Available
Index Not Available
Max Number Controlled Not Available
IRQ Number 29
I/O Port 0x4C00-0x4CFF
Driver c:\winnt\system32\drivers\adpu160m.sys (64432, v3.10a)

[Printing]

Name Port Name Server Name
No printing information

[Problem Devices]

Device PNP Device ID Error Code
Not Available ACPI\IBM37C0\4&F0B8F99&0 28

[USB]

Device PNP Device ID
Standard OpenHCD USB Host Controller
PCI\VEN_1166&DEV_0220&SUBSYS_02201166&REV_04\3&267A616A&0&7A
USB Root Hub USB\ROOT_HUB\4&372644EA&0

[Software Environment]

[Following are sub-categories of this main category]

[Drivers]

Name Description File Type Started
Start Mode State Status Error Control
Accept Pause Accept Stop
abiosdsk Abiosdsk Not Available Kernel Driver
False Disabled Stopped OK Ignore False
False
abp480n5 abp480n5 Not Available Kernel Driver
False Disabled Stopped OK Normal False
False
acpi Microsoft ACPI Driver
c:\winnt\system32\drivers\acpi.sys Kernel Driver
True Boot Running OK Normal False
True
acpiec ACPIEC c:\winnt\system32\drivers\acpiec.sys
Kernel Driver False Disabled Stopped OK
Normal False False
adpu160m adpu160m c:\winnt\system32\drivers\adpu160m.sys
Kernel Driver True Boot Running OK
Normal False True
afd AFD Networking Support Environment
c:\winnt\system32\drivers\afd.sysKernel Driver True
Auto Running OK Normal False True
aha154x Aha154x Not Available Kernel Driver
False Disabled Stopped OK Normal False
False
aic116x aic116x Not Available Kernel Driver
False Disabled Stopped OK Normal False
False
aic78u2 aic78u2 Not Available Kernel Driver
False Disabled Stopped OK Normal False
False

```
aic78xx aic78xx Not Available Kernel Driver
False Disabled Stopped OK Normal False
False
ami0nt ami0nt Not Available Kernel Driver
False Disabled Stopped OK Normal False
False
amsint amsint Not Available Kernel Driver
False Disabled Stopped OK Normal False
False
asc asc Not Available Kernel Driver
False Disabled Stopped OK Normal False
False
asc3350p asc3350p Not Available Kernel Driver
False Disabled Stopped OK Normal False
False
asc3550 asc3550 Not Available Kernel Driver
False Disabled Stopped OK Normal False
False
asyncmac RAS Asynchronous Media Driver
c:\winnt\system32\drivers\asyncmac.sys Kernel Driver
False Manual Stopped OK Normal False
False
atapi Standard IDE/ESDI Hard Disk Controller
c:\winnt\system32\drivers\atapi.sys Kernel Driver
True Boot Running OK Normal False
True
atdisk Atdisk Not Available Kernel Driver
False Disabled Stopped OK Ignore False
False
atmarpc ATM ARP Client Protocol
c:\winnt\system32\drivers\atmarpc.sys Kernel Driver
False Manual Stopped OK Normal False
False
audstub Audio Stub Driver
c:\winnt\system32\drivers\audstub.sys Kernel Driver
True Manual Running OK Normal False
True
beep Beep c:\winnt\system32\drivers\beep.sys
Kernel Driver True System Running OK
Normal False True
buslogic BusLogic Not Available Kernel Driver
False Disabled Stopped OK Normal False
False
cd20xrnt cd20xrnt Not Available Kernel Driver
False Disabled Stopped OK Normal False
False
cdaudio Cdaudio c:\winnt\system32\drivers\cdaudio.sys
Kernel Driver False System Stopped OK
Ignore False False
cdfs Cdfs c:\winnt\system32\drivers\cdfs.sys File
System Driver True Disabled Running OK
Normal False True
cdrom CD-ROM Driver c:\winnt\system32\drivers\cdrom.sys
Kernel Driver True System Running OK
Normal False True
changer Changer Not Available Kernel Driver
False System Stopped OK Ignore False
False
cpqarray Cpqarray Not Available Kernel Driver
False Disabled Stopped OK Normal False
False
cpqarry2 cpqarry2 Not Available Kernel Driver
False Disabled Stopped OK Normal False
False
cpqfcalm cpqfcalm Not Available Kernel Driver
False Disabled Stopped OK Normal False
False
cpqfws2e cpqfws2e Not Available Kernel Driver
False Disabled Stopped OK Normal False
False
dac960nt dac960nt Not Available Kernel Driver
False Disabled Stopped OK Normal False
False
deckzpsx deckzpsx Not Available Kernel Driver
False Disabled Stopped OK Normal False
False
dfsdriver DfsDriver c:\winnt\system32\drivers\dfs.sysFile System
Driver True Boot Running OK Normal
False True
disk Disk Driver c:\winnt\system32\drivers\disk.sys
Kernel Driver True Boot Running OK
Normal False True
diskperf Diskperf c:\winnt\system32\drivers\diskperf.sys
Kernel Driver True Boot Running OK
Normal False True
dmboot dmboot c:\winnt\system32\drivers\dmboot.sys
Kernel Driver False Disabled Stopped OK
Normal False False
dmio Logical Disk Manager Driver
c:\winnt\system32\drivers\dmio.sys Kernel Driver
True Boot Running OK Normal False
True
dmload dmload c:\winnt\system32\drivers\dmload.sys
Kernel Driver True Boot Running OK
Normal False True
e100b Intel PRO Adapter Driver
c:\winnt\system32\drivers\e100bnt5.sys Kernel Driver
True Manual Running OK Normal False
True
efs EFS c:\winnt\system32\drivers\efs.sysFile System
Driver True Disabled Running OK Normal
False True
fastfat Fastfat c:\winnt\system32\drivers\fastfat.sys File
System Driver True Disabled Running OK
Normal False True
fd16_700 Fd16_700 Not Available Kernel Driver
False Disabled Stopped OK Normal False
False
fdc Floppy Disk Controller Driver
c:\winnt\system32\drivers\fdc.sysKernel Driver True
Manual Running OK Normal False True
fireport fireport Not Available Kernel Driver
False Disabled Stopped OK Normal False
False
flashpnt flashpnt Not Available Kernel Driver
False Disabled Stopped OK Normal False
False
flpydisk Floppy Disk Driver
c:\winnt\system32\drivers\flpydisk.sys Kernel Driver
True Manual Running OK Normal False
True
ftdisk Volume Manager Driver
c:\winnt\system32\drivers\ftdisk.sys Kernel Driver
True Boot Running OK Normal False
True
gpc Generic Packet Classifier
c:\winnt\system32\drivers\msgpc.sys Kernel Driver
True Manual Running OK Normal False
True
i8042prt i8042 Keyboard and PS/2 Mouse Port Driver
c:\winnt\system32\drivers\i8042prt.sys Kernel Driver
True System Running OK Normal False
True
ibmfe IBM 10/100 Ethernet PCI Adapter NT Driver
c:\winnt\system32\drivers\ibmfent5.sys Kernel Driver
```

```
False Manual Stopped OK Normal False
False
ini910u ini910u Not Available Kernel Driver
False Disabled Stopped OK Normal False
False
intelide IntelIde Not Available Kernel Driver
False Disabled Stopped OK Normal False
False
ipfilterdriver IP Traffic Filter Driver
c:\winnt\system32\drivers\ipfltdrv.sys Kernel Driver
False Manual Stopped OK Normal False
False
ipinip IP in IP Tunnel Driverc:\winnt\system32\drivers\ipinip.sys
Kernel Driver False Manual Stopped OK
Normal False False
ipnat IP Network Address Translator
c:\winnt\system32\drivers\ipnat.sys Kernel Driver
False Manual Stopped OK Normal False
False
ipsec IPSEC driver c:\winnt\system32\drivers\ipsec.sys
Kernel Driver True Manual Running OK
Normal False True
ipsraidn ipsraidn Not Available Kernel Driver
False Disabled Stopped OK Normal False
False
isapnp PnP ISA/EISA Bus Driver
c:\winnt\system32\drivers\isapnp.sys Kernel Driver
True Boot Running OK Critical False
True
kbdclass Keyboard Class Driver
c:\winnt\system32\drivers\kbdclass.sys Kernel Driver
True System Running OK Normal False
True
ksecdd KSecDD c:\winnt\system32\drivers\ksecdd.sys
Kernel Driver True Boot Running OK
Normal False True
lbrtfdc lbrtfdc Not Available Kernel Driver
False System Stopped OK Ignore False
False
lp6nds35 lp6nds35 Not Available Kernel Driver
False Disabled Stopped OK Normal False
False
mnmdd mnmdd c:\winnt\system32\drivers\mnmdd.sys
Kernel Driver True System Running OK
Ignore False True
modem Modem c:\winnt\system32\drivers\modem.sys
Kernel Driver False Manual Stopped OK
Ignore False False
mouclass Mouse Class Driver
c:\winnt\system32\drivers\mouclass.sys Kernel Driver
True System Running OK Normal False
True
mountmgr MountMgr c:\winnt\system32\drivers\mountmgr.sys
Kernel Driver True Boot Running OK
Normal False True
mraid35x mraid35x Not Available Kernel Driver
False Disabled Stopped OK Normal False
False
mrxsmb MRXSMB c:\winnt\system32\drivers\mrxsmb.sys File
System Driver True System Running OK
Normal False True
msfs Msfs c:\winnt\system32\drivers\msfs.sys File
System Driver True System Running OK
Normal False True
mskssrv Microsoft Streaming Service Proxy
c:\winnt\system32\drivers\mskssrv.sys Kernel Driver
False Manual Stopped OK Normal False
False
mspclock Microsoft Streaming Clock Proxy
c:\winnt\system32\drivers\mspclock.sys Kernel Driver
False Manual Stopped OK Normal False
False
mspqm Microsoft Streaming Quality Manager Proxy
c:\winnt\system32\drivers\mspqm.sys Kernel Driver
False Manual Stopped OK Normal False
False
mup Mup c:\winnt\system32\drivers\mup.sys File
System Driver True Boot Running OK
Normal False True
ncrc710 Ncrc710 Not Available Kernel Driver
False Disabled Stopped OK Normal False
False
ndis NDIS System Driver c:\winnt\system32\drivers\ndis.sys
Kernel Driver True Boot Running OK
Normal False True
ndistapi Remote Access NDIS TAPI Driver
c:\winnt\system32\drivers\ndistapi.sys Kernel Driver
True Manual Running OK Normal False
True
ndiswan Remote Access NDIS WAN Driver
c:\winnt\system32\drivers\ndiswan.sys Kernel Driver
True Manual Running OK Normal False
True
ndproxy NDIS Proxy
c:\winnt\system32\drivers\ndproxy.sys Kernel Driver
True Manual Running OK Normal False
True
netbios NetBIOS Interface c:\winnt\system32\drivers\netbios.sys
File System Driver True System Running OK
Normal False True
netbt NetBios over Tcpip c:\winnt\system32\drivers\netbt.sys
Kernel Driver True System Running OK
Normal False True
netdetect NetDetect c:\winnt\system32\drivers\netdtect.sys
Kernel Driver False Manual Stopped OK
Normal False False
npfs Npfs c:\winnt\system32\drivers\npfs.sys File
System Driver True System Running OK
Normal False True
ntfs Ntfs c:\winnt\system32\drivers\ntfs.sys File
System Driver True Disabled Running OK
Normal False True
null Null c:\winnt\system32\drivers\null.sys
Kernel Driver True System Running OK
Normal False True
nwlnkflt IPX Traffic Filter Driver
c:\winnt\system32\drivers\nwlnkflt.sys Kernel Driver
False Manual Stopped OK Normal False
False
nwlnkfwd IPX Traffic Forwarder Driver
c:\winnt\system32\drivers\nwlnkfwd.sys Kernel Driver
False Manual Stopped OK Normal False
False
openhci Microsoft USB Open Host Controller Driver
c:\winnt\system32\drivers\openhci.sys Kernel Driver
True Manual Running OK Normal False
True
parallel Parallel class driver c:\winnt\system32\drivers\parallel.sys
Kernel Driver True Manual Running OK
Normal False True
parport Parallel port driver c:\winnt\system32\drivers\parport.sys
Kernel Driver True System Running OK
Ignore False True
partmgr PartMgr c:\winnt\system32\drivers\partmgr.sys
Kernel Driver True Boot Running OK
Normal False True
```

parvdm ParVdm c:\winnt\system32\drivers\parvdm.sys
Kernel Driver True Auto Running OK
Ignore False True
pci PCI Bus Driver c:\winnt\system32\drivers\pci.sys
Kernel Driver True Boot Running OK
Critical False True
pcidump PCIDump Not Available Kernel Driver
False System Stopped OK Ignore False
False
pciide PCIIde c:\winnt\system32\drivers\pciide.sys
Kernel Driver True Boot Running OK
Normal False True
pcmcia Pcmcia c:\winnt\system32\drivers\pcmcia.sys
Kernel Driver False Disabled Stopped OK
Normal False False
pcnet AMD PCNET Compatable Adapter Driver
c:\winnt\system32\drivers\pcntn5m.sys Kernel Driver
True Manual Running OK Normal False
True
pdcomp PDCOMP Not Available Kernel Driver
False Manual Stopped OK Ignore False
False
pdframe PDFRAME Not Available Kernel Driver
False Manual Stopped OK Ignore False
False
pdreli PDRELI Not Available Kernel Driver
False Manual Stopped OK Ignore False
False
pdrframe PDRFRAME Not Available Kernel Driver
False Manual Stopped OK Ignore False
False
pptpminiport WAN Miniport (PPTP)
c:\winnt\system32\drivers\raspptp.sys Kernel Driver
True Manual Running OK Normal False
True
ptilink Direct Parallel Link Driver
c:\winnt\system32\drivers\ptilink.sys Kernel Driver
True Manual Running OK Normal False
True
ql1080 ql1080 Not Available Kernel Driver
False Disabled Stopped OK Normal False
False
ql10wnt Ql10wnt Not Available Kernel Driver
False Disabled Stopped OK Normal False
False
ql1240 ql1240 Not Available Kernel Driver
False Disabled Stopped OK Normal False
False
ql2100 ql2100 Not Available Kernel Driver
False Disabled Stopped OK Normal False
False
rasacd Remote Access Auto Connection Driver
c:\winnt\system32\drivers\rasacd.sys Kernel Driver
True System Running OK Normal False
True
rasl2tp WAN Miniport (L2TP)
c:\winnt\system32\drivers\rasl2tp.sys Kernel Driver
True Manual Running OK Normal False
True
raspti Direct Parallel c:\winnt\system32\drivers\raspti.sys
Kernel Driver True Manual Running OK
Normal False True
rca Microsoft Streaming Network Raw Channel Access
c:\winnt\system32\drivers\rca.sysKernel Driver False
Manual Stopped OK Normal False False
rdbss Rdbss c:\winnt\system32\drivers\rdbss.sys File
System Driver True System Running OK
Normal False True
rdpdr Terminal Server Device Redirector Driver
c:\winnt\system32\drivers\rdpdr.sys Kernel Driver
True Manual Running OK Normal False
True
rdpwd RDPWD c:\winnt\system32\drivers\rdpwd.sys
Kernel Driver True Manual Running OK
Ignore False True
redbook Digital CD Audio Playback Filter Driver
c:\winnt\system32\drivers\redbook.sys Kernel Driver
False System Stopped OK Normal False
False
s3inc S3Inc c:\winnt\system32\drivers\s3sav4m.sys
Kernel Driver True Manual Running OK
Ignore False True
serenum Serenum Filter Driver
c:\winnt\system32\drivers\serenum.sys Kernel Driver
True Manual Running OK Normal False
True
serial Serial port driver c:\winnt\system32\drivers\serial.sys
Kernel Driver True System Running OK
Ignore False True
sfloppy Sfloppy c:\winnt\system32\drivers\sfloppy.sys
Kernel Driver False System Stopped OK
Ignore False False
sglfb sglfb Not Available Kernel Driver
False System Stopped OK Normal False
False
simbad Simbad Not Available Kernel Driver
False Disabled Stopped OK Normal False
False
sparrow Sparrow Not Available Kernel Driver
False Disabled Stopped OK Normal False
False
spud Special Purpose Utility Driver
c:\winnt\system32\drivers\spud.sys Kernel Driver
True Manual Running OK Normal False
True
srv Srv c:\winnt\system32\drivers\srv.sysFile System
Driver True Manual Running OK Normal
False True
swenum Software Bus Driver
c:\winnt\system32\drivers\swenum.sys Kernel Driver
True Manual Running OK Normal False
True
symc810 symc810 Not Available Kernel Driver
False Disabled Stopped OK Normal False
False
symc8xx symc8xx Not Available Kernel Driver
False Disabled Stopped OK Normal False
False
sym_hi sym_hi Not Available Kernel Driver
False Disabled Stopped OK Normal False
False
tcpip TCP/IP Protocol Driver
c:\winnt\system32\drivers\tcpip.sys Kernel Driver
True System Running OK Normal False
True
tdasync TDASYNC c:\winnt\system32\drivers\tdasync.sys
Kernel Driver False Manual Stopped OK
Ignore False False
tdipx TDIPX c:\winnt\system32\drivers\tdipx.sys
Kernel Driver False Manual Stopped OK
Ignore False False
tdnetb TDNETB c:\winnt\system32\drivers\tdnetb.sys
Kernel Driver False Manual Stopped OK
Ignore False False

tdpipe TDPIPE c:\winnt\system32\drivers\tdpipe.sys
Kernel Driver False Manual Stopped OK
Ignore False False
tdspx TDSPX c:\winnt\system32\drivers\tdspx.sys
Kernel Driver False Manual Stopped OK
Ignore False False
tdtcp TDTCP c:\winnt\system32\drivers\tdtcp.sys
Kernel Driver True Manual Running OK
Ignore False True
termdd Terminal Device Driver
c:\winnt\system32\drivers\termdd.sys Kernel Driver
True Auto Running OK Normal False
True
tga tga Not Available Kernel Driver
False System Stopped OK Ignore False
False
udfs Udfs c:\winnt\system32\drivers\udfs.sys File
System Driver False Disabled Stopped OK
Normal False False
ultra66 ultra66 Not Available Kernel Driver
False Disabled Stopped OK Normal False
False
update Microcode Update Driver
c:\winnt\system32\drivers\update.sys Kernel Driver
True Manual Running OK Normal False
True
usbhub Microsoft USB Standard Hub Driver
c:\winnt\system32\drivers\usbhub.sys Kernel Driver
True Manual Running OK Normal False
True
vgasave VgaSave c:\winnt\system32\drivers\vga.sys
Kernel Driver True System Running OK
Ignore False True
wanarp Remote Access IP ARP Driver
c:\winnt\system32\drivers\wanarp.sys Kernel Driver
True Manual Running OK Normal False
True
wdica WDICA Not Available Kernel Driver
False Manual Stopped OK Ignore False
False

[Environment Variables]

Variable Value User Name
ComSpec %SystemRoot%\system32\cmd.exe <SYSTEM>
NUMBER_OF_PROCESSORS 2 <SYSTEM>
OS Windows_NT <SYSTEM>
Os2LibPath %SystemRoot%\system32\os2\dll;
<SYSTEM>
Path
%SystemRoot%\system32;%SystemRoot%;%SystemRoot%\System32\
Wbem;c:\nttools;C:\Program Files\Microsoft SQL
Server\80\Tools\BINN <SYSTEM>
PATHEXT
.COM;.EXE;.BAT;.CMD;.VBS;.VBE;.JS;.JSE;.WSF;.WSH
<SYSTEM>
PROCESSOR_ARCHITECTURE x86 <SYSTEM>
PROCESSOR_IDENTIFIER x86 Family 6 Model 8 Stepping 3,
GenuineIntel <SYSTEM>
PROCESSOR_LEVEL 6 <SYSTEM>
PROCESSOR_REVISION 0803 <SYSTEM>
TEMP %SystemRoot%\TEMP <SYSTEM>
TMP %SystemRoot%\TEMP <SYSTEM>
windir %SystemRoot% <SYSTEM>
TEMP %USERPROFILE%\Local Settings\Temp
RTCLIENT64\tpcc
TMP %USERPROFILE%\Local Settings\Temp
RTCLIENT64\tpcc
TEMP %USERPROFILE%\Local Settings\Temp
RTCLIENT64\Administrator
TMP %USERPROFILE%\Local Settings\Temp
RTCLIENT64\Administrator

[Jobs]

[Following are sub-categories of this main category]

[Print]

Document Size Owner Notify Status Time
Submitted Start Time Until Time Elapsed Time Pages Printed
Job ID Priority Parameters Driver Name Print Processor
Host Print Queue Data Type Name
No print jobs

[Network Connections]

Local Name Remote Name Type Status
User Name
No network connections information

[Running Tasks]

Name Path Process ID Priority Min Working Set
Max Working Set Start Time Version Size File Date
system idle process Not Available 0 0 Not
Available Not Available Not Available Unknown
Unknown Unknown
system Not Available 8 8 0
1413120 Not Available Unknown Unknown Unknown
smss.exe c:\winnt\system32\smss.exe 180 11
204800 1413120 3/19/2001 2:06:47 PM 5.00.2170.1
44.27 KB (45,328 bytes) 12/7/1999 7:00:00 AM
csrss.exe Not Available 204 13 Not Available
Not Available 3/19/2001 2:06:50 PM Unknown
Unknown Unknown
winlogon.exe c:\winnt\system32\winlogon.exe 200 13
204800 1413120 3/19/2001 2:06:51 PM 5.00.2182.1
173.27 KB (177,424 bytes) 12/7/1999 7:00:00 AM
services.exe c:\winnt\system32\services.exe 256 9
204800 1413120 3/19/2001 2:06:52 PM 5.00.2134.1
86.77 KB (88,848 bytes) 12/7/1999 7:00:00 AM
lsass.exe c:\winnt\system32\lsass.exe 268 13
204800 1413120 3/19/2001 2:06:52 PM 5.00.2184.1
32.77 KB (33,552 bytes) 12/7/1999 7:00:00 AM
svchost.exe c:\winnt\system32\svchost.exe 440 8
204800 1413120 3/19/2001 2:06:55 PM 5.00.2134.1
7.77 KB (7,952 bytes) 12/7/1999 7:00:00 AM
spoolsv.exe c:\winnt\system32\spoolsv.exe 456 8
204800 1413120 3/19/2001 2:06:55 PM 5.00.2161.1
43.77 KB (44,816 bytes) 11/13/2000 6:01:25 AM
msdtc.exe c:\winnt\system32\msdtc.exe 484 8
204800 1413120 3/19/2001 2:06:55 PM 1999.9.3421.3
6.77 KB (6,928 bytes) 11/13/2000 6:23:37 AM
svchost.exe c:\winnt\system32\svchost.exe 608 8
204800 1413120 3/19/2001 2:06:57 PM 5.00.2134.1
7.77 KB (7,952 bytes) 12/7/1999 7:00:00 AM
llssrv.exe c:\winnt\system32\llssrv.exe 632 9
204800 1413120 3/19/2001 2:06:57 PM 5.00.2167.1
114.27 KB (117,008 bytes) 12/7/1999 7:00:00 AM
regsvc.exe c:\winnt\system32\regsvc.exe 696 8
204800 1413120 3/19/2001 2:06:57 PM 5.00.2155.1
65.27 KB (66,832 bytes) 12/7/1999 7:00:00 AM

rsys.exe c:\benchcraft\rsys.exe 712 8 204800
1413120 3/19/2001 2:06:57 PM Not Available
32.00 KB (32,768 bytes) 9/8/2000 3:47:26 PM
rshsvc.exe c:\winnt\system32\rshsvc.exe 740 8
204800 1413120 3/19/2001 2:06:58 PM Not Available
53.50 KB (54,784 bytes) 11/21/2000 5:07:53 PM
mstask.exe c:\winnt\system32\mstask.exe 756 8
204800 1413120 3/19/2001 2:06:58 PM 4.71.2137.1
115.27 KB (118,032 bytes) 11/13/2000 10:26:08 AM
explorer.exe c:\winnt\explorer.exe 680 8
204800 1413120 3/19/2001 2:07:06 PM
5.00.2920.0000 232.77 KB (238,352 bytes) 12/7/1999
7:00:00 AM
tcpsvcs.exe c:\winnt\system32\tcpsvcs.exe 976 8
204800 1413120 3/19/2001 2:07:07 PM 5.00.2134.1
24.77 KB (25,360 bytes) 12/7/1999 7:00:00 AM
termsrv.exe c:\winnt\system32\termsrv.exe 1004 10
204800 1413120 3/19/2001 2:07:07 PM 5.00.2182.1
136.77 KB (140,048 bytes) 11/13/2000 6:23:41 AM
winmgmt.exe c:\winnt\system32\wbem\winmgmt.exe
1036 8 204800 1413120 3/19/2001 2:07:08 PM
1.50.1085.0001 188.05 KB (192,567 bytes) 12/7/1999
7:00:00 AM
inetinfo.exe c:\winnt\system32\inetsrv\inetinfo.exe
1064 8 204800 1413120 3/19/2001 2:07:08 PM
5.00.0984 14.27 KB (14,608 bytes) 11/27/2000 1:51:25 PM
dfssvc.exe c:\winnt\system32\dfssvc.exe 1188 8
204800 1413120 3/19/2001 2:07:09 PM 5.00.2191.1
85.27 KB (87,312 bytes) 12/7/1999 7:00:00 AM
mmc.exe c:\winnt\system32\mmc.exe 1268 8
204800 1413120 3/19/2001 2:07:19 PM 5.00.2153.1
589.27 KB (603,408 bytes) 12/7/1999 7:00:00 AM
svchost.exe c:\winnt\system32\svchost.exe 1484 8
204800 1413120 3/19/2001 2:07:43 PM 5.00.2134.1
7.77 KB (7,952 bytes) 12/7/1999 7:00:00 AM
rsvp.exe c:\winnt\system32\rsvp.exe 1324 8
204800 1413120 3/19/2001 2:08:44 PM 5.00.2167.1
172.77 KB (176,912 bytes) 12/7/1999 7:00:00 AM

[Loaded Modules]

Name Version Size File Date Manufacturer Path
traffic.dll 5.00.2139.1 30.77 KB (31,504 bytes)
12/7/1999 7:00:00 AM Microsoft Corporation
c:\winnt\system32\traffic.dll
rsvp.exe 5.00.2167.1 172.77 KB (176,912 bytes)
12/7/1999 7:00:00 AM Microsoft Corporation
c:\winnt\system32\rsvp.exe
tapisrv.dll 5.00.2186.1 168.77 KB (172,816 bytes)
12/7/1999 7:00:00 AM Microsoft Corporation
c:\winnt\system32\tapisrv.dll
wbemprox.dll 1.50.1085.0001 40.05 KB (41,016 bytes)
12/7/1999 7:00:00 AM Microsoft Corporation
c:\winnt\system32\wbem\wbemprox.dll
olepro32.dll 5.0.4512 160.27 KB (164,112 bytes)
12/7/1999 7:00:00 AM Microsoft Corporation
c:\winnt\system32\olepro32.dll
dmocx.dll 5.00.2134.1 23.27 KB (23,824 bytes)
12/7/1999 7:00:00 AM Microsoft Corporation
c:\winnt\system32\dmocx.dll
mlang.dll 5.00.2920.0000 510.77 KB (523,024 bytes)
12/7/1999 7:00:00 AM Microsoft Corporation
c:\winnt\system32\mlang.dll
rassapi.dll 5.00.2188.1 14.27 KB (14,608 bytes)
12/7/1999 7:00:00 AM Microsoft Corporation
c:\winnt\system32\rassapi.dll
adsnt.dll 5.00.2191.1 194.27 KB (198,928 bytes)
12/7/1999 7:00:00 AM Microsoft Corporation
c:\winnt\system32\adsnt.dll
dbghelp.dll 5.00.2195.1 159.27 KB (163,088
bytes) 12/7/1999 7:00:00 AM Microsoft Corporation
c:\winnt\system32\dbghelp.dll
localsec.dll 5.00.2134.1 227.27 KB (232,720
bytes) 12/7/1999 7:00:00 AM Microsoft Corporation
c:\winnt\system32\localsec.dll
devmgr.dll 5.00.2166.1 215.77 KB (220,944 bytes)
12/7/1999 7:00:00 AM Microsoft Corporation
c:\winnt\system32\devmgr.dll
filemgmt.dll 5.00.2134.1 287.27 KB (294,160
bytes) 12/7/1999 7:00:00 AM Microsoft Corporation
c:\winnt\system32\filemgmt.dll
pdh.dll 5.00.2174.1 143.27 KB (146,704 bytes)
12/7/1999 7:00:00 AM Microsoft Corporation
c:\winnt\system32\pdh.dll
smlogcfg.dll 5.00.2163.1 273.27 KB (279,824
bytes) 12/7/1999 7:00:00 AM Microsoft Corporation
c:\winnt\system32\smlogcfg.dll
cabinet.dll 5.00.2147.1 54.77 KB (56,080 bytes)
12/7/1999 7:00:00 AM Microsoft Corporation
c:\winnt\system32\cabinet.dll
msinfo32.dll 5.00.2177.1 312.27 KB (319,760
bytes) 11/13/2000 10:26:16 AM Microsoft Corporation
c:\program files\common files\microsoft shared\msinfo\msinfo32.dll
riched20.dll 5.30.23.1200 421.27 KB (431,376
bytes) 12/7/1999 7:00:00 AM Microsoft Corporation
c:\winnt\system32\riched20.dll
riched32.dll 5.00.2134.1 3.77 KB (3,856 bytes)
12/7/1999 7:00:00 AM Microsoft Corporation
c:\winnt\system32\riched32.dll
els.dll 5.00.2175.1 151.27 KB (154,896 bytes)
12/7/1999 7:00:00 AM Microsoft Corporation
c:\winnt\system32\els.dll
ntmsmgr.dll 1,0,0,1 427.77 KB (438,032 bytes)
12/7/1999 7:00:00 AM Microsoft Corporation and
HighGround Systems, Inc. c:\winnt\system32\ntmsmgr.dll
mmfutil.dll 1.50.1085.0000 32.06 KB (32,829 bytes)
12/7/1999 7:00:00 AM Microsoft Corporation
c:\winnt\system32\mmfutil.dll
logdrive.dll 1.50.1085.0000 200.06 KB (204,863
bytes) 12/7/1999 7:00:00 AM Microsoft Corporation
c:\winnt\system32\logdrive.dll
dfrgres.dll 5.00.2150.1 27.50 KB (28,160 bytes)
12/7/1999 7:00:00 AM Executive Software International, Inc.
c:\winnt\system32\dfrgres.dll
dfrgsnap.dll 5.00.2150.1 41.77 KB (42,768 bytes)
12/7/1999 7:00:00 AM Executive Software International, Inc.
c:\winnt\system32\dfrgsnap.dll
dmdskres.dll 2191.1.296.2 119.00 KB (121,856
bytes) 12/7/1999 7:00:00 AM Microsoft Corp.,
VERITAS Software c:\winnt\system32\dmdskres.dll
dmutil.dll 2191.1.296.2 41.77 KB (42,768 bytes)
12/7/1999 7:00:00 AM VERITAS Software Corp.
c:\winnt\system32\dmutil.dll
ntmsapi.dll 5.00.1948.1 50.27 KB (51,472 bytes)
12/7/1999 7:00:00 AM Microsoft Corporation
c:\winnt\system32\ntmsapi.dll
dmdskmgr.dll 2191.1.296.2 158.77 KB (162,576
bytes) 12/7/1999 7:00:00 AM Microsoft Corp.,
VERITAS Software c:\winnt\system32\dmdskmgr.dll
mycomput.dll 5.00.2134.1 107.77 KB (110,352
bytes) 12/7/1999 7:00:00 AM Microsoft Corporation
c:\winnt\system32\mycomput.dll

mmcndmgr.dll 5.00.2178.1 815.27 KB (834,832 bytes) 12/7/1999 7:00:00 AM Microsoft Corporation c:\winnt\system32\mmcndmgr.dll
mmc.exe 5.00.2153.1 589.27 KB (603,408 bytes) 12/7/1999 7:00:00 AM Microsoft Corporation c:\winnt\system32\mmc.exe
dfssvc.exe 5.00.2191.1 85.27 KB (87,312 bytes) 12/7/1999 7:00:00 AM Microsoft Corporation c:\winnt\system32\dfssvc.exe
mailmsg.dll 5.00.0984 64.27 KB (65,808 bytes) 11/27/2000 1:52:55 PM Microsoft Corporation c:\winnt\system32\inetsrv\mailmsg.dll
ntfsdrv.dll 5.00.0984 36.77 KB (37,648 bytes) 11/27/2000 1:52:56 PM Microsoft Corporation c:\winnt\system32\inetsrv\ntfsdrv.dll
iislog.dll 5.00.0984 76.27 KB (78,096 bytes) 11/27/2000 1:51:25 PM Microsoft Corporation c:\winnt\system32\inetsrv\iislog.dll
httpext.dll 0.9.3939.9 418.27 KB (428,304 bytes) 11/27/2000 1:51:24 PM Microsoft Corporation c:\winnt\system32\inetsrv\httpext.dll
rpcproxy.dll 5.00.2176.1 16.27 KB (16,656 bytes) 11/27/2000 1:51:23 PM Microsoft Corporation c:\winnt\system32\rpcproxy\rpcproxy.dll
fpexedll.dll 4.0.2.3406 20.06 KB (20,541 bytes) 11/13/2000 6:26:42 AM Microsoft Corporation c:\program files\common files\microsoft shared\web server extensions\40\bin\fpexedll.dll
md5filt.dll 5.00.0984 32.77 KB (33,552 bytes) 11/27/2000 1:51:31 PM Microsoft Corporation c:\winnt\system32\inetsrv\md5filt.dll
aqueue.dll 5.00.0984 260.27 KB (266,512 bytes) 11/13/2000 6:26:35 AM Microsoft Corporation c:\winnt\system32\inetsrv\aqueue.dll
gzip.dll 5.00.0984 30.27 KB (30,992 bytes) 11/27/2000 1:51:30 PM Microsoft Corporation c:\winnt\system32\inetsrv\gzip.dll
compfilt.dll 5.00.0984 22.27 KB (22,800 bytes) 11/27/2000 1:51:30 PM Microsoft Corporation c:\winnt\system32\inetsrv\compfilt.dll
seo.dll 5.00.0984 230.77 KB (236,304 bytes) 11/13/2000 6:26:36 AM Microsoft Corporation c:\winnt\system32\inetsrv\seo.dll
sspifilt.dll 5.00.0984 43.27 KB (44,304 bytes) 11/27/2000 1:51:32 PM Microsoft Corporation c:\winnt\system32\inetsrv\sspifilt.dll
iscomlog.dll 5.00.0984 24.77 KB (25,360 bytes) 11/27/2000 1:51:25 PM Microsoft Corporation c:\winnt\system32\inetsrv\iscomlog.dll
lonsint.dll 5.00.0984 11.77 KB (12,048 bytes) 11/27/2000 1:51:25 PM Microsoft Corporation c:\winnt\system32\inetsrv\lonsint.dll
inetsloc.dll 5.00.0984 20.27 KB (20,752 bytes) 11/27/2000 1:51:27 PM Microsoft Corporation c:\winnt\system32\inetsloc.dll
w3svc.dll 5.00.0984 347.27 KB (355,600 bytes) 11/27/2000 1:51:32 PM Microsoft Corporation c:\winnt\system32\inetsrv\w3svc.dll
staxmem.dll 5.00.0984 8.27 KB (8,464 bytes) 11/27/2000 1:51:24 PM Microsoft Corporation c:\winnt\system32\staxmem.dll
exstrace.dll 5.00.0984 13.77 KB (14,096 bytes) 11/27/2000 1:51:26 PM Microsoft Corporation c:\winnt\system32\exstrace.dll
rwnh.dll 5.00.0984 10.77 KB (11,024 bytes) 11/13/2000 6:26:36 AM Microsoft Corporation c:\winnt\system32\rwnh.dll
fcachdll.dll 5.00.0984 43.77 KB (44,816 bytes) 11/27/2000 1:52:55 PM Microsoft Corporation c:\winnt\system32\fcachdll.dll
iisfecnv.dll 5.00.0984 7.27 KB (7,440 bytes) 11/27/2000 1:51:25 PM Microsoft Corporation c:\winnt\system32\inetsrv\iisfecnv.dll
isatq.dll 5.00.0984 61.27 KB (62,736 bytes) 11/27/2000 1:51:27 PM Microsoft Corporation c:\winnt\system32\inetsrv\isatq.dll
infocomm.dll 5.00.0984 234.27 KB (239,888 bytes) 11/27/2000 1:51:25 PM Microsoft Corporation c:\winnt\system32\inetsrv\infocomm.dll
smtpsvc.dll 5.00.0984 406.27 KB (416,016 bytes) 11/27/2000 1:52:57 PM Microsoft Corporation c:\winnt\system32\inetsrv\smtpsvc.dll
security.dll 5.00.2154.1 5.77 KB (5,904 bytes) 12/7/1999 7:00:00 AM Microsoft Corporation c:\winnt\system32\security.dll
svcext.dll 5.00.0984 39.77 KB (40,720 bytes) 11/27/2000 1:51:26 PM Microsoft Corporation c:\winnt\system32\inetsrv\svcext.dll
admexs.dll 5.00.0984 27.77 KB (28,432 bytes) 11/27/2000 1:51:24 PM Microsoft Corporation c:\winnt\system32\inetsrv\admexs.dll
wamreg.dll 5.00.0984 46.27 KB (47,376 bytes) 11/27/2000 1:51:32 PM Microsoft Corporation c:\winnt\system32\inetsrv\wamreg.dll
metadata.dll 5.00.0984 70.77 KB (72,464 bytes) 11/27/2000 1:51:25 PM Microsoft Corporation c:\winnt\system32\inetsrv\metadata.dll
iismap.dll 5.00.0984 56.27 KB (57,616 bytes) 11/27/2000 1:51:26 PM Microsoft Corporation c:\winnt\system32\iismap.dll
nsepm.dll 5.00.0984 43.27 KB (44,304 bytes) 11/27/2000 1:51:25 PM Microsoft Corporation c:\winnt\system32\inetsrv\nsepm.dll
coadmin.dll 5.00.0984 39.77 KB (40,720 bytes) 11/27/2000 1:51:27 PM Microsoft Corporation c:\winnt\system32\inetsrv\coadmin.dll
iisadmin.dll 5.00.0984 14.77 KB (15,120 bytes) 11/27/2000 1:51:24 PM Microsoft Corporation c:\winnt\system32\inetsrv\iisadmin.dll
rpcref.dll 5.00.0984 4.27 KB (4,368 bytes) 11/27/2000 1:51:25 PM Microsoft Corporation c:\winnt\system32\inetsrv\rpcref.dll
iisrtl.dll 5.00.0984 120.77 KB (123,664 bytes) 11/27/2000 1:51:26 PM Microsoft Corporation c:\winnt\system32\iisrtl.dll
inetinfo.exe 5.00.0984 14.27 KB (14,608 bytes) 11/27/2000 1:51:25 PM Microsoft Corporation c:\winnt\system32\inetsrv\inetinfo.exe
wshnetbs.dll 5.00.2134.1 7.77 KB (7,952 bytes) 12/7/1999 7:00:00 AM Microsoft Corporation c:\winnt\system32\wshnetbs.dll
rapilib.dll 5.00.2167.1 25.27 KB (25,872 bytes) 12/7/1999 7:00:00 AM Microsoft Corporation c:\winnt\system32\rapilib.dll
rsvpsp.dll 5.00.2167.1 74.77 KB (76,560 bytes) 12/7/1999 7:00:00 AM Microsoft Corporation c:\winnt\system32\rsvpsp.dll
ntmarta.dll 5.00.2158.1 98.77 KB (101,136 bytes) 12/7/1999 7:00:00 AM Microsoft Corporation c:\winnt\system32\ntmarta.dll
provthrd.dll 1.50.1085.0000 68.07 KB (69,708 bytes) 11/13/2000 10:26:07 AM Microsoft Corporation c:\winnt\system32\wbem\provthrd.dll
ntevt.dll 1.50.1085.0000 192.06 KB (196,669 bytes) 12/7/1999 7:00:00 AM Microsoft Corporation c:\winnt\system32\wbem\ntevt.dll

perfos.dll 5.00.2155.1 21.27 KB (21,776 bytes) 12/7/1999 7:00:00 AM Microsoft Corporation c:\winnt\system32\perfos.dll
psapi.dll 5.00.2134.1 28.27 KB (28,944 bytes) 12/7/1999 7:00:00 AM Microsoft Corporation c:\winnt\system32\psapi.dll
framedyn.dll 1.50.1085.0000 164.05 KB (167,992 bytes) 12/7/1999 7:00:00 AM Microsoft Corporation c:\winnt\system32\wbem\framedyn.dll
cimwin32.dll 1.50.1085.0000 1.03 MB (1,077,306 bytes) 12/7/1999 7:00:00 AM Microsoft Corporation c:\winnt\system32\wbem\cimwin32.dll
wbemsvc.dll 1.50.1085.0000 140.07 KB (143,430 bytes) 12/7/1999 7:00:00 AM Microsoft Corporation c:\winnt\system32\wbem\wbemsvc.dll
wbemess.dll 1.50.1085.0001 352.05 KB (360,503 bytes) 12/7/1999 7:00:00 AM Microsoft Corporation c:\winnt\system32\wbem\wbemess.dll
fastprox.dll 1.50.1085.0001 144.08 KB (147,534 bytes) 12/7/1999 7:00:00 AM Microsoft Corporation c:\winnt\system32\wbem\fastprox.dll
wbemcore.dll 1.50.1085.0001 632.05 KB (647,224 bytes) 12/7/1999 7:00:00 AM Microsoft Corporation c:\winnt\system32\wbem\wbemcore.dll
wbemcomn.dll 1.50.1085.0001 684.05 KB (700,472 bytes) 12/7/1999 7:00:00 AM Microsoft Corporation c:\winnt\system32\wbem\wbemcomn.dll
winmgmt.exe 1.50.1085.0001 188.05 KB (192,567 bytes) 12/7/1999 7:00:00 AM Microsoft Corporation c:\winnt\system32\wbem\winmgmt.exe
rdpwsx.dll 5.00.2180.1 94.40 KB (96,664 bytes) 11/13/2000 6:23:40 AM Microsoft Corporation c:\winnt\system32\rdpwsx.dll
ntlsapi.dll 5.00.2134.1 6.77 KB (6,928 bytes) 12/7/1999 7:00:00 AM Microsoft Corporation c:\winnt\system32\ntlsapi.dll
mstlsapi.dll 5.00.2181.1 24.77 KB (25,360 bytes) 12/7/1999 7:00:00 AM Microsoft Corporation c:\winnt\system32\mstlsapi.dll
icaapi.dll 5.00.2134.1 118.77 KB (121,616 bytes) 11/13/2000 6:23:39 AM Microsoft Corporation c:\winnt\system32\icaapi.dll
regapi.dll 5.00.2155.1 35.27 KB (36,112 bytes) 12/7/1999 7:00:00 AM Microsoft Corporation c:\winnt\system32\regapi.dll
termsrv.exe 5.00.2182.1 136.77 KB (140,048 bytes) 11/13/2000 6:23:41 AM Microsoft Corporation c:\winnt\system32\termsrv.exe
simptcp.dll 5.00.2134.1 19.27 KB (19,728 bytes) 11/13/2000 6:23:31 AM Microsoft Corporation c:\winnt\system32\simptcp.dll
tcpsvcs.exe 5.00.2134.1 24.77 KB (25,360 bytes) 12/7/1999 7:00:00 AM Microsoft Corporation c:\winnt\system32\tcpsvcs.exe
wininet.dll 5.00.2920.0000 456.77 KB (467,728 bytes) 12/7/1999 7:00:00 AM Microsoft Corporation c:\winnt\system32\wininet.dll
urlmon.dll 5.00.2920.0000 426.77 KB (437,008 bytes) 12/7/1999 7:00:00 AM Microsoft Corporation c:\winnt\system32\urlmon.dll
faxshell.dll 5.00.2134.1 8.27 KB (8,464 bytes) 12/7/1999 7:00:00 AM Microsoft Corporation c:\winnt\system32\faxshell.dll
msacm32.dll 5.00.2134.1 65.27 KB (66,832 bytes) 12/7/1999 7:00:00 AM Microsoft Corporation c:\winnt\system32\msacm32.dll
avifil32.dll 5.00.2134.1 76.27 KB (78,096 bytes) 12/7/1999 7:00:00 AM Microsoft Corporation c:\winnt\system32\avifil32.dll
msvfw32.dll 5.00.2134.1 113.77 KB (116,496 bytes) 12/7/1999 7:00:00 AM Microsoft Corporation c:\winnt\system32\msvfw32.dll
docprop2.dll 5.00.2178.1 297.77 KB (304,912 bytes) 12/7/1999 7:00:00 AM Microsoft Corporation c:\winnt\system32\docprop2.dll
linkinfo.dll 5.00.2134.1 15.77 KB (16,144 bytes) 12/7/1999 7:00:00 AM Microsoft Corporation c:\winnt\system32\linkinfo.dll
msi.dll 1.10.1029.0 1.71 MB (1,794,320 bytes) 12/7/1999 7:00:00 AM Microsoft Corporation c:\winnt\system32\msi.dll
powrprof.dll 5.00.2920.0000 13.27 KB (13,584 bytes) 12/7/1999 7:00:00 AM Microsoft Corporation c:\winnt\system32\powrprof.dll
batmeter.dll 5.00.2920.0000 20.27 KB (20,752 bytes) 12/7/1999 7:00:00 AM Microsoft Corporation c:\winnt\system32\batmeter.dll
stobject.dll 5.00.2144.1 81.77 KB (83,728 bytes) 12/7/1999 7:00:00 AM Microsoft Corporation c:\winnt\system32\stobject.dll
webcheck.dll 5.00.2920.0000 251.77 KB (257,808 bytes) 12/7/1999 7:00:00 AM Microsoft Corporation c:\winnt\system32\webcheck.dll
browselc.dll 5.00.2920.0000 34.50 KB (35,328 bytes) 12/7/1999 7:00:00 AM Microsoft Corporation c:\winnt\system32\browselc.dll
netui1.dll 5.00.2134.1 210.27 KB (215,312 bytes) 12/7/1999 7:00:00 AM Microsoft Corporation c:\winnt\system32\netui1.dll
netui0.dll 5.00.2134.1 70.27 KB (71,952 bytes) 12/7/1999 7:00:00 AM Microsoft Corporation c:\winnt\system32\netui0.dll
ntlanman.dll 5.00.2157.1 35.27 KB (36,112 bytes) 12/7/1999 7:00:00 AM Microsoft Corporation c:\winnt\system32\ntlanman.dll
ntshrui.dll 5.00.2134.1 46.77 KB (47,888 bytes) 12/7/1999 7:00:00 AM Microsoft Corporation c:\winnt\system32\ntshrui.dll
mydocs.dll 5.00.2920.0000 55.77 KB (57,104 bytes) 12/7/1999 7:00:00 AM Microsoft Corporation c:\winnt\system32\mydocs.dll
hhsetup.dll 4.74.8702 66.27 KB (67,856 bytes) 12/7/1999 7:00:00 AM Microsoft Corporation c:\winnt\system32\hhsetup.dll
mmcshext.dll 5.00.2153.1 24.27 KB (24,848 bytes) 12/7/1999 7:00:00 AM Microsoft Corporation c:\winnt\system32\mmcshext.dll
browseui.dll 5.00.2920.0000 793.27 KB (812,304 bytes) 12/7/1999 7:00:00 AM Microsoft Corporation c:\winnt\system32\browseui.dll
shdocvw.dll 5.00.2920.0000 1.05 MB (1,104,144 bytes) 12/7/1999 7:00:00 AM Microsoft Corporation c:\winnt\system32\shdocvw.dll
explorer.exe 5.00.2920.0000 232.77 KB (238,352 bytes) 12/7/1999 7:00:00 AM Microsoft Corporation c:\winnt\explorer.exe
msidle.dll 5.00.2920.0000 6.27 KB (6,416 bytes) 12/7/1999 7:00:00 AM Microsoft Corporation c:\winnt\system32\msidle.dll
mstask.exe 4.71.2137.1 115.27 KB (118,032 bytes) 11/13/2000 10:26:08 AM Microsoft Corporation c:\winnt\system32\mstask.exe

rshsvc.dll Not Available 18.00 KB (18,432 bytes) 11/21/2000 5:07:53 PM Not Available c:\winnt\system32\rshsvc.dll
rshsvc.exe Not Available 53.50 KB (54,784 bytes) 11/21/2000 5:07:53 PM Not Available c:\winnt\system32\rshsvc.exe
rsys.exe Not Available 32.00 KB (32,768 bytes) 9/8/2000 3:47:26 PM Not Available c:\benchcraft\rsys.exe
regsvc.exe 5.00.2155.1 65.27 KB (66,832 bytes) 12/7/1999 7:00:00 AM Microsoft Corporation c:\winnt\system32\regsvc.exe
llsrpc.dll 5.00.2149.1 45.77 KB (46,864 bytes) 12/7/1999 7:00:00 AM Microsoft Corporation c:\winnt\system32\llsrpc.dll
llssrv.exe 5.00.2167.1 114.27 KB (117,008 bytes) 12/7/1999 7:00:00 AM Microsoft Corporation c:\winnt\system32\llssrv.exe
ntmsdba.dll 5.00.2187.1 167.77 KB (171,792 bytes) 12/7/1999 7:00:00 AM Microsoft Corporation c:\winnt\system32\ntmsdba.dll
rasdlg.dll 5.00.2194.1 514.27 KB (526,608 bytes) 12/7/1999 7:00:00 AM Microsoft Corporation c:\winnt\system32\rasdlg.dll
netcfgx.dll 5.00.2175.1 533.77 KB (546,576 bytes) 12/7/1999 7:00:00 AM Microsoft Corporation c:\winnt\system32\netcfgx.dll
rasmans.dll 5.00.2188.1 146.77 KB (150,288 bytes) 12/7/1999 7:00:00 AM Microsoft Corporation c:\winnt\system32\rasmans.dll
netshell.dll 5.00.2176.1 456.77 KB (467,728 bytes) 12/7/1999 7:00:00 AM Microsoft Corporation c:\winnt\system32\netshell.dll
netman.dll 5.00.2175.1 88.77 KB (90,896 bytes) 12/7/1999 7:00:00 AM Microsoft Corporation c:\winnt\system32\netman.dll
sens.dll 5.00.2163.1 36.77 KB (37,648 bytes) 12/7/1999 7:00:00 AM Microsoft Corporation c:\winnt\system32\sens.dll
iashlpr.dll 5.00.2184.1 33.27 KB (34,064 bytes) 12/7/1999 7:00:00 AM Microsoft Corporation c:\winnt\system32\iashlpr.dll
iasacct.dll 5.00.2134.1 28.27 KB (28,944 bytes) 12/7/1999 7:00:00 AM Microsoft Corporation c:\winnt\system32\iasacct.dll
iasuserr.dll 5.00.2134.1 25.77 KB (26,384 bytes) 12/7/1999 7:00:00 AM Microsoft Corporation c:\winnt\system32\iasuserr.dll
iasnap.dll 5.00.2134.1 58.77 KB (60,176 bytes) 12/7/1999 7:00:00 AM Microsoft Corporation c:\winnt\system32\iasnap.dll
iaspipe.dll 5.00.2134.1 41.77 KB (42,768 bytes) 12/7/1999 7:00:00 AM Microsoft Corporation c:\winnt\system32\iaspipe.dll
expsrv.dll 6.0.8540 370.27 KB (379,152 bytes) 12/7/1999 7:00:00 AM Microsoft Corporation c:\winnt\system32\expsrv.dll
vbajet32.dll 6.1.8268 30.27 KB (30,992 bytes) 12/7/1999 7:00:00 AM Microsoft Corporation c:\winnt\system32\vbajet32.dll
msjtes40.dll 4.00.2927.8 232.27 KB (237,840 bytes) 12/7/1999 7:00:00 AM Microsoft Corporation c:\winnt\system32\msjtes40.dll
oledb32r.dll 2.60.6526.0 68.27 KB (69,904 bytes) 1/3/2001 4:23:49 PM Microsoft Corporation c:\program files\common files\system\ole db\oledb32r.dll
comdlg32.dll 5.00.2920.0000 236.77 KB (242,448 bytes) 12/7/1999 7:00:00 AM Microsoft Corporation c:\winnt\system32\comdlg32.dll
msdart.dll 2.60.6526.0 144.27 KB (147,728 bytes) 1/3/2001 4:23:48 PM Microsoft Corporation c:\winnt\system32\msdart.dll
oledb32.dll 2.60.6526.0 448.27 KB (459,024 bytes) 1/3/2001 4:23:49 PM Microsoft Corporation c:\program files\common files\system\ole db\oledb32.dll
msjint40.dll 4.00.2927.2 148.27 KB (151,824 bytes) 12/7/1999 7:00:00 AM Microsoft Corporation c:\winnt\system32\msjint40.dll
msjter40.dll 4.00.2927.2 52.27 KB (53,520 bytes) 12/7/1999 7:00:00 AM Microsoft Corporation c:\winnt\system32\msjter40.dll
mswstr10.dll 4.00.2927.10 600.27 KB (614,672 bytes) 12/7/1999 7:00:00 AM Microsoft Corporation c:\winnt\system32\mswstr10.dll
msjet40.dll 4.00.2927.4 1.43 MB (1,495,312 bytes) 12/7/1999 7:00:00 AM Microsoft Corporation c:\winnt\system32\msjet40.dll
msjetoledb40.dll 4.00.2927.2 340.27 KB (348,432 bytes) 12/7/1999 7:00:00 AM Microsoft Corporation c:\winnt\system32\msjetoledb40.dll
iasrad.dll 5.00.2139.1 94.27 KB (96,528 bytes) 12/7/1999 7:00:00 AM Microsoft Corporation c:\winnt\system32\iasrad.dll
iassam.dll 5.00.2160.1 96.27 KB (98,576 bytes) 12/7/1999 7:00:00 AM Microsoft Corporation c:\winnt\system32\iassam.dll
iasads.dll 5.00.2134.1 73.77 KB (75,536 bytes) 12/7/1999 7:00:00 AM Microsoft Corporation c:\winnt\system32\iasads.dll
iaspolcy.dll 5.00.2134.1 25.27 KB (25,872 bytes) 12/7/1999 7:00:00 AM Microsoft Corporation c:\winnt\system32\iaspolcy.dll
iassvcs.dll 5.00.2160.1 58.77 KB (60,176 bytes) 12/7/1999 7:00:00 AM Microsoft Corporation c:\winnt\system32\iassvcs.dll
iassdo.dll 5.00.2157.1 262.27 KB (268,560 bytes) 12/7/1999 7:00:00 AM Microsoft Corporation c:\winnt\system32\iassdo.dll
ntmssvc.dll 5.00.2187.1 390.77 KB (400,144 bytes) 12/7/1999 7:00:00 AM Microsoft Corporation c:\winnt\system32\ntmssvc.dll
ias.dll 5.00.2134.1 7.27 KB (7,440 bytes) 12/7/1999 7:00:00 AM Microsoft Corporation c:\winnt\system32\ias.dll
es.dll 1999.9.3422.21 231.77 KB (237,328 bytes) 12/7/1999 7:00:00 AM Microsoft Corporation c:\winnt\system32\es.dll
mtxoci.dll 1999.9.3421.3 109.27 KB (111,888 bytes) 11/13/2000 6:23:38 AM Microsoft Corporation c:\winnt\system32\mtxoci.dll
resutils.dll 5.00.2191.1 39.77 KB (40,720 bytes) 12/7/1999 7:00:00 AM Microsoft Corporation c:\winnt\system32\resutils.dll
clusapi.dll 5.00.2179.1 50.27 KB (51,472 bytes) 12/7/1999 7:00:00 AM Microsoft Corporation c:\winnt\system32\clusapi.dll
msvcp50.dll 5.00.7051 552.50 KB (565,760 bytes) 12/7/1999 7:00:00 AM Microsoft Corporation c:\winnt\system32\msvcp50.dll
xolehlp.dll 1999.9.3421.3 17.27 KB (17,680 bytes) 11/13/2000 6:23:38 AM Microsoft Corporation c:\winnt\system32\xolehlp.dll
msdtclog.dll 1999.9.3421.3 89.77 KB (91,920 bytes) 11/13/2000 6:23:37 AM Microsoft Corporation c:\winnt\system32\msdtclog.dll

mtxclu.dll 1999.9.3421.3 50.27 KB (51,472 bytes) 12/7/1999 7:00:00 AM Microsoft Corporation c:\winnt\system32\mtxclu.dll
msdtcprx.dll 1999.9.3422.10 619.27 KB (634,128 bytes) 11/13/2000 6:23:38 AM Microsoft Corporation c:\winnt\system32\msdtcprx.dll
txfaux.dll 1999.9.3422.24 341.27 KB (349,456 bytes) 11/13/2000 6:23:37 AM Microsoft Corporation c:\winnt\system32\txfaux.dll
msdtctm.dll 1999.9.3422.12 1.02 MB (1,070,864 bytes) 11/13/2000 6:23:38 AM Microsoft Corporation c:\winnt\system32\msdtctm.dll
msdtc.exe 1999.9.3421.3 6.77 KB (6,928 bytes) 11/13/2000 6:23:37 AM Microsoft Corporation c:\winnt\system32\msdtc.exe
wmi.dll 5.00.2191.1 6.27 KB (6,416 bytes) 12/7/1999 7:00:00 AM Microsoft Corporation c:\winnt\system32\wmi.dll
admwprox.dll 5.00.0984 31.77 KB (32,528 bytes) 11/27/2000 1:51:26 PM Microsoft Corporation c:\winnt\system32\admwprox.dll
inetpp.dll 5.00.2161.1 63.27 KB (64,784 bytes) 12/7/1999 7:00:00 AM Microsoft Corporation c:\winnt\system32\inetpp.dll
win32spl.dll 5.00.2162.1 92.27 KB (94,480 bytes) 12/7/1999 7:00:00 AM Microsoft Corporation c:\winnt\system32\win32spl.dll
usbmon.dll 5.00.2165.1 11.27 KB (11,536 bytes) 12/7/1999 7:00:00 AM Microsoft Corporation c:\winnt\system32\usbmon.dll
tcpmon.dll 5.00.2165.1 40.77 KB (41,744 bytes) 12/7/1999 7:00:00 AM Microsoft Corporation c:\winnt\system32\tcpmon.dll
pjlmon.dll 5.00.2165.1 12.77 KB (13,072 bytes) 11/30/1999 6:39:36 PM Microsoft Corporation c:\winnt\system32\pjlmon.dll
cnbjmon.dll 5.00.2134.1 43.77 KB (44,816 bytes) 11/30/1999 6:38:48 PM Microsoft Corporation c:\winnt\system32\cnbjmon.dll
localspl.dll 5.00.2191.1 244.77 KB (250,640 bytes) 12/7/1999 7:00:00 AM Microsoft Corporation c:\winnt\system32\localspl.dll
spoolss.dll 5.00.2161.1 61.77 KB (63,248 bytes) 11/13/2000 6:01:25 AM Microsoft Corporation c:\winnt\system32\spoolss.dll
spoolsv.exe 5.00.2161.1 43.77 KB (44,816 bytes) 11/13/2000 6:01:25 AM Microsoft Corporation c:\winnt\system32\spoolsv.exe
rpcss.dll 5.00.2181.1 229.27 KB (234,768 bytes) 12/7/1999 7:00:00 AM Microsoft Corporation c:\winnt\system32\rpcss.dll
svchost.exe 5.00.2134.1 7.77 KB (7,952 bytes) 12/7/1999 7:00:00 AM Microsoft Corporation c:\winnt\system32\svchost.exe
dssbase.dll 5.00.2150.1 140.77 KB (144,144 bytes) 12/7/1999 7:00:00 AM Microsoft Corporation c:\winnt\system32\dssbase.dll
oakley.dll 5.00.2174.1 420.27 KB (430,352 bytes) 12/7/1999 7:00:00 AM Microsoft Corporation c:\winnt\system32\oakley.dll
mfc42u.dll 6.00.8665.0 972.05 KB (995,384 bytes) 12/7/1999 7:00:00 AM Microsoft Corporation c:\winnt\system32\mfc42u.dll
polagent.dll 5.00.2183.1 108.27 KB (110,864 bytes) 12/7/1999 7:00:00 AM Microsoft Corporation c:\winnt\system32\polagent.dll
scecli.dll 5.00.2191.1 105.27 KB (107,792 bytes) 12/7/1999 7:00:00 AM Microsoft Corporation c:\winnt\system32\scecli.dll
atl.dll 3.00.8449 57.56 KB (58,938 bytes) 12/7/1999 7:00:00 AM Microsoft Corporation c:\winnt\system32\atl.dll
certcli.dll 5.00.2175.1 132.27 KB (135,440 bytes) 12/7/1999 7:00:00 AM Microsoft Corporation c:\winnt\system32\certcli.dll
esent.dll 6.0.3939.6 1.07 MB (1,120,016 bytes) 12/7/1999 7:00:00 AM Microsoft Corporation c:\winnt\system32\esent.dll
ntdsatq.dll 5.00.2181.1 31.27 KB (32,016 bytes) 12/7/1999 7:00:00 AM Microsoft Corporation c:\winnt\system32\ntdsatq.dll
ntdsa.dll 5.00.2195.1 993.27 KB (1,017,104 bytes) 12/7/1999 7:00:00 AM Microsoft Corporation c:\winnt\system32\ntdsa.dll
kdcsvc.dll 5.00.2181.1 133.77 KB (136,976 bytes) 12/7/1999 7:00:00 AM Microsoft Corporation c:\winnt\system32\kdcsvc.dll
sfmapi.dll 5.00.2134.1 38.77 KB (39,696 bytes) 12/7/1999 7:00:00 AM Microsoft Corporation c:\winnt\system32\sfmapi.dll
rassfm.dll 5.00.2168.1 21.27 KB (21,776 bytes) 12/7/1999 7:00:00 AM Microsoft Corporation c:\winnt\system32\rassfm.dll
mpr.dll 5.00.2146.1 53.27 KB (54,544 bytes) 12/7/1999 7:00:00 AM Microsoft Corporation c:\winnt\system32\mpr.dll
schannel.dll 5.00.2170.1 139.77 KB (143,120 bytes) 12/7/1999 7:00:00 AM Microsoft Corporation c:\winnt\system32\schannel.dll
netlogon.dll 5.00.2182.1 347.77 KB (356,112 bytes) 12/7/1999 7:00:00 AM Microsoft Corporation c:\winnt\system32\netlogon.dll
msv1_0.dll 5.00.2164.1 94.77 KB (97,040 bytes) 12/7/1999 7:00:00 AM Microsoft Corporation c:\winnt\system32\msv1_0.dll
kerberos.dll 5.00.2181.1 196.77 KB (201,488 bytes) 12/7/1999 7:00:00 AM Microsoft Corporation c:\winnt\system32\kerberos.dll
msprivs.dll 5.00.2154.1 41.50 KB (42,496 bytes) 12/7/1999 7:00:00 AM Microsoft Corporation c:\winnt\system32\msprivs.dll
samsrv.dll 5.00.2192.1 357.77 KB (366,352 bytes) 12/7/1999 7:00:00 AM Microsoft Corporation c:\winnt\system32\samsrv.dll
lsasrv.dll 5.00.2184.1 487.77 KB (499,472 bytes) 12/7/1999 7:00:00 AM Microsoft Corporation c:\winnt\system32\lsasrv.dll
lsass.exe 5.00.2184.1 32.77 KB (33,552 bytes) 12/7/1999 7:00:00 AM Microsoft Corporation c:\winnt\system32\lsass.exe
wmicore.dll 5.00.2178.1 70.77 KB (72,464 bytes) 12/7/1999 7:00:00 AM Microsoft Corporation c:\winnt\system32\wmicore.dll
rasadhlp.dll 5.00.2168.1 7.27 KB (7,440 bytes) 12/7/1999 7:00:00 AM Microsoft Corporation c:\winnt\system32\rasadhlp.dll
winrnr.dll 5.00.2160.1 18.77 KB (19,216 bytes) 12/7/1999 7:00:00 AM Microsoft Corporation c:\winnt\system32\winrnr.dll
rnr20.dll 5.00.2152.1 35.77 KB (36,624 bytes) 12/7/1999 7:00:00 AM Microsoft Corporation c:\winnt\system32\rnr20.dll

mswsock.dll 5.00.2152.1 62.27 KB (63,760 bytes) 12/7/1999 7:00:00 AM Microsoft Corporation c:\winnt\system32\mswsock.dll
msgsvc.dll 5.00.2181.1 33.77 KB (34,576 bytes) 12/7/1999 7:00:00 AM Microsoft Corporation c:\winnt\system32\msgsvc.dll
xactsrv.dll 5.00.2134.1 90.27 KB (92,432 bytes) 12/7/1999 7:00:00 AM Microsoft Corporation c:\winnt\system32\xactsrv.dll
browser.dll 5.00.2142.1 48.27 KB (49,424 bytes) 12/7/1999 7:00:00 AM Microsoft Corporation c:\winnt\system32\browser.dll
alrsvc.dll 5.00.2134.1 17.77 KB (18,192 bytes) 12/7/1999 7:00:00 AM Microsoft Corporation c:\winnt\system32\alrsvc.dll
trkwks.dll 5.00.2166.1 88.77 KB (90,896 bytes) 12/7/1999 7:00:00 AM Microsoft Corporation c:\winnt\system32\trkwks.dll
seclogon.dll 5.00.2135.1 15.77 KB (16,144 bytes) 12/7/1999 7:00:00 AM Microsoft Corporation c:\winnt\system32\seclogon.dll
wshtcpip.dll 5.00.2134.1 17.27 KB (17,680 bytes) 12/7/1999 7:00:00 AM Microsoft Corporation c:\winnt\system32\wshtcpip.dll
msafd.dll 5.00.2153.1 54.27 KB (55,568 bytes) 12/7/1999 7:00:00 AM Microsoft Corporation c:\winnt\system32\msafd.dll
psbase.dll 5.00.2146.1 111.77 KB (114,448 bytes) 12/7/1999 7:00:00 AM Microsoft Corporation c:\winnt\system32\psbase.dll
cryptsvc.dll 5.00.2181.1 61.77 KB (63,248 bytes) 12/7/1999 7:00:00 AM Microsoft Corporation c:\winnt\system32\cryptsvc.dll
cryptdll.dll 5.00.2135.1 41.27 KB (42,256 bytes) 12/7/1999 7:00:00 AM Microsoft Corporation c:\winnt\system32\cryptdll.dll
wkssvc.dll 5.00.2181.1 95.27 KB (97,552 bytes) 12/7/1999 7:00:00 AM Microsoft Corporation c:\winnt\system32\wkssvc.dll
srvsvc.dll 5.00.2178.1 79.27 KB (81,168 bytes) 12/7/1999 7:00:00 AM Microsoft Corporation c:\winnt\system32\srvsvc.dll
cfgmgr32.dll 5.00.2134.1 16.77 KB (17,168 bytes) 12/7/1999 7:00:00 AM Microsoft Corporation c:\winnt\system32\cfgmgr32.dll
dmserver.dll 2191.1.296.2 11.77 KB (12,048 bytes) 12/7/1999 7:00:00 AM VERITAS Software Corp. c:\winnt\system32\dmserver.dll
lmhsvc.dll 5.00.2134.1 9.27 KB (9,488 bytes) 12/7/1999 7:00:00 AM Microsoft Corporation c:\winnt\system32\lmhsvc.dll
dnsrslvr.dll 5.00.2181.1 88.27 KB (90,384 bytes) 12/7/1999 7:00:00 AM Microsoft Corporation c:\winnt\system32\dnsrslvr.dll
tapi32.dll 5.00.2182.1 123.27 KB (126,224 bytes) 12/7/1999 7:00:00 AM Microsoft Corporation c:\winnt\system32\tapi32.dll
rasman.dll 5.00.2188.1 54.77 KB (56,080 bytes) 12/7/1999 7:00:00 AM Microsoft Corporation c:\winnt\system32\rasman.dll
rasapi32.dll 5.00.2188.1 189.77 KB (194,320 bytes) 12/7/1999 7:00:00 AM Microsoft Corporation c:\winnt\system32\rasapi32.dll
rtutils.dll 5.00.2168.1 43.77 KB (44,816 bytes) 12/7/1999 7:00:00 AM Microsoft Corporation c:\winnt\system32\rtutils.dll
adsldpc.dll 5.00.2172.1 127.77 KB (130,832 bytes) 12/7/1999 7:00:00 AM Microsoft Corporation c:\winnt\system32\adsldpc.dll
activeds.dll 5.00.2172.1 172.77 KB (176,912 bytes) 12/7/1999 7:00:00 AM Microsoft Corporation c:\winnt\system32\activeds.dll
mprapi.dll 5.00.2181.1 79.27 KB (81,168 bytes) 12/7/1999 7:00:00 AM Microsoft Corporation c:\winnt\system32\mprapi.dll
iphlpapi.dll 5.00.2173.2 67.77 KB (69,392 bytes) 12/7/1999 7:00:00 AM Microsoft Corporation c:\winnt\system32\iphlpapi.dll
icmp.dll 5.00.2134.1 7.27 KB (7,440 bytes) 12/7/1999 7:00:00 AM Microsoft Corporation c:\winnt\system32\icmp.dll
dhcpcsvc.dll 5.00.2153.1 88.77 KB (90,896 bytes) 12/7/1999 7:00:00 AM Microsoft Corporation c:\winnt\system32\dhcpcsvc.dll
eventlog.dll 5.00.2178.1 43.77 KB (44,816 bytes) 12/7/1999 7:00:00 AM Microsoft Corporation c:\winnt\system32\eventlog.dll
ntdsapi.dll 5.00.2160.1 56.27 KB (57,616 bytes) 12/7/1999 7:00:00 AM Microsoft Corporation c:\winnt\system32\ntdsapi.dll
scesrv.dll 5.00.2188.1 225.77 KB (231,184 bytes) 12/7/1999 7:00:00 AM Microsoft Corporation c:\winnt\system32\scesrv.dll
umpnpmgr.dll 5.00.2182.1 86.27 KB (88,336 bytes) 12/7/1999 7:00:00 AM Microsoft Corporation c:\winnt\system32\umpnpmgr.dll
services.exe 5.00.2134.1 86.77 KB (88,848 bytes) 12/7/1999 7:00:00 AM Microsoft Corporation c:\winnt\system32\services.exe
clbcatq.dll 1999.9.3422.14 479.27 KB (490,768 bytes) 11/13/2000 6:23:31 AM Microsoft Corporation c:\winnt\system32\clbcatq.dll
oleaut32.dll 2.40.4512 600.27 KB (614,672 bytes) 12/7/1999 7:00:00 AM Microsoft Corporation c:\winnt\system32\oleaut32.dll
cscui.dll 5.00.2172.1 227.27 KB (232,720 bytes) 12/7/1999 7:00:00 AM Microsoft Corporation c:\winnt\system32\cscui.dll
winspool.drv 5.00.2167.1 109.77 KB (112,400 bytes) 12/7/1999 7:00:00 AM Microsoft Corporation c:\winnt\system32\winspool.drv
winscard.dll 5.00.2134.1 77.27 KB (79,120 bytes) 12/7/1999 7:00:00 AM Microsoft Corporation c:\winnt\system32\winscard.dll
wlnotify.dll 5.00.2164.1 53.27 KB (54,544 bytes) 12/7/1999 7:00:00 AM Microsoft Corporation c:\winnt\system32\wlnotify.dll
cscdll.dll 5.00.2189.1 98.27 KB (100,624 bytes) 12/7/1999 7:00:00 AM Microsoft Corporation c:\winnt\system32\cscdll.dll
lz32.dll 5.00.2134.1 9.77 KB (10,000 bytes) 12/7/1999 7:00:00 AM Microsoft Corporation c:\winnt\system32\lz32.dll
version.dll 5.00.2134.1 15.77 KB (16,144 bytes) 12/7/1999 7:00:00 AM Microsoft Corporation c:\winnt\system32\version.dll
rsabase.dll 5.00.2150.1 128.77 KB (131,856 bytes) 12/7/1999 7:00:00 AM Microsoft Corporation c:\winnt\system32\rsabase.dll
mscat32.dll 5.131.2134.1 7.77 KB (7,952 bytes) 12/7/1999 7:00:00 AM Microsoft Corporation c:\winnt\system32\mscat32.dll

ole32.dll 5.00.2181.1 966.27 KB (989,456 bytes) 12/7/1999 7:00:00 AM Microsoft Corporation c:\winnt\system32\ole32.dll
imagehlp.dll 5.00.2195.1 125.27 KB (128,272 bytes) 12/7/1999 7:00:00 AM Microsoft Corporation c:\winnt\system32\imagehlp.dll
msasn1.dll 5.00.2134.1 51.27 KB (52,496 bytes) 12/7/1999 7:00:00 AM Microsoft Corporation c:\winnt\system32\msasn1.dll
crypt32.dll 5.131.2173.1 465.77 KB (476,944 bytes) 12/7/1999 7:00:00 AM Microsoft Corporation c:\winnt\system32\crypt32.dll
wintrust.dll 5.131.2143.1 162.27 KB (166,160 bytes) 12/7/1999 7:00:00 AM Microsoft Corporation c:\winnt\system32\wintrust.dll
setupapi.dll 5.00.2183.1 554.27 KB (567,568 bytes) 12/7/1999 7:00:00 AM Microsoft Corporation c:\winnt\system32\setupapi.dll
winmm.dll 5.00.2161.1 184.77 KB (189,200 bytes) 12/7/1999 7:00:00 AM Microsoft Corporation c:\winnt\system32\winmm.dll
comctl32.dll 5.81 540.27 KB (553,232 bytes) 12/7/1999 7:00:00 AM Microsoft Corporation c:\winnt\system32\comctl32.dll
shlwapi.dll 5.00.2920.0000 282.77 KB (289,552 bytes) 12/7/1999 7:00:00 AM Microsoft Corporation c:\winnt\system32\shlwapi.dll
shell32.dll 5.00.2920.0000 2.24 MB (2,352,400 bytes) 12/7/1999 7:00:00 AM Microsoft Corporation c:\winnt\system32\shell32.dll
msgina.dll 5.00.2191.1 309.77 KB (317,200 bytes) 12/7/1999 7:00:00 AM Microsoft Corporation c:\winnt\system32\msgina.dll
winsta.dll 5.00.2134.1 36.27 KB (37,136 bytes) 12/7/1999 7:00:00 AM Microsoft Corporation c:\winnt\system32\winsta.dll
wsock32.dll 5.00.2152.1 21.27 KB (21,776 bytes) 12/7/1999 7:00:00 AM Microsoft Corporation c:\winnt\system32\wsock32.dll
dnsapi.dll 5.00.2181.1 129.77 KB (132,880 bytes) 12/7/1999 7:00:00 AM Microsoft Corporation c:\winnt\system32\dnsapi.dll
wldap32.dll 5.00.2168.1 155.77 KB (159,504 bytes) 12/7/1999 7:00:00 AM Microsoft Corporation c:\winnt\system32\wldap32.dll
ws2help.dll 5.00.2134.1 17.77 KB (18,192 bytes) 12/7/1999 7:00:00 AM Microsoft Corporation c:\winnt\system32\ws2help.dll
ws2_32.dll 5.00.2134.1 69.77 KB (71,440 bytes) 12/7/1999 7:00:00 AM Microsoft Corporation c:\winnt\system32\ws2_32.dll
samlib.dll 5.00.2160.1 46.27 KB (47,376 bytes) 12/7/1999 7:00:00 AM Microsoft Corporation c:\winnt\system32\samlib.dll
netrap.dll 5.00.2134.1 11.27 KB (11,536 bytes) 12/7/1999 7:00:00 AM Microsoft Corporation c:\winnt\system32\netrap.dll
netapi32.dll 5.00.2194.1 302.77 KB (310,032 bytes) 12/7/1999 7:00:00 AM Microsoft Corporation c:\winnt\system32\netapi32.dll
profmap.dll 5.00.2181.1 29.27 KB (29,968 bytes) 12/7/1999 7:00:00 AM Microsoft Corporation c:\winnt\system32\profmap.dll
secur32.dll 5.00.2154.1 46.77 KB (47,888 bytes) 12/7/1999 7:00:00 AM Microsoft Corporation c:\winnt\system32\secur32.dll
sfc.dll 5.00.2164.1 84.27 KB (86,288 bytes) 12/7/1999 7:00:00 AM Microsoft Corporation c:\winnt\system32\sfc.dll
nddeapi.dll 5.00.2137.1 15.27 KB (15,632 bytes) 12/7/1999 7:00:00 AM Microsoft Corporation c:\winnt\system32\nddeapi.dll
userenv.dll 5.00.2185.1 361.27 KB (369,936 bytes) 12/7/1999 7:00:00 AM Microsoft Corporation c:\winnt\system32\userenv.dll
user32.dll 5.00.2180.1 393.27 KB (402,704 bytes) 12/7/1999 7:00:00 AM Microsoft Corporation c:\winnt\system32\user32.dll
gdi32.dll 5.00.2180.1 228.77 KB (234,256 bytes) 12/7/1999 7:00:00 AM Microsoft Corporation c:\winnt\system32\gdi32.dll
rpcrt4.dll 5.00.2193.1 434.27 KB (444,688 bytes) 12/7/1999 7:00:00 AM Microsoft Corporation c:\winnt\system32\rpcrt4.dll
advapi32.dll 5.00.2191.1 349.27 KB (357,648 bytes) 12/7/1999 7:00:00 AM Microsoft Corporation c:\winnt\system32\advapi32.dll
kernel32.dll 5.00.2191.1 715.27 KB (732,432 bytes) 12/7/1999 7:00:00 AM Microsoft Corporation c:\winnt\system32\kernel32.dll
msvcrt.dll 6.10.8637.0 288.09 KB (295,000 bytes) 12/7/1999 7:00:00 AM Microsoft Corporation c:\winnt\system32\msvcrt.dll
winlogon.exe 5.00.2182.1 173.27 KB (177,424 bytes) 12/7/1999 7:00:00 AM Microsoft Corporation c:\winnt\system32\winlogon.exe
sfcfiles.dll 5.00.2195.1 973.27 KB (996,624 bytes) 12/7/1999 7:00:00 AM Microsoft Corporation c:\winnt\system32\sfcfiles.dll
ntdll.dll 5.00.2163.1 469.77 KB (481,040 bytes) 12/7/1999 7:00:00 AM Microsoft Corporation c:\winnt\system32\ntdll.dll
smss.exe 5.00.2170.1 44.27 KB (45,328 bytes) 12/7/1999 7:00:00 AM Microsoft Corporation c:\winnt\system32\smss.exe

[Services]

Display Name Name State Start Mode Service Type Path Error Control Start Name Tag ID
Alerter Alerter Running Auto Share Process c:\winnt\system32\services.exe Normal LocalSystem 0
Application Management AppMgmt Stopped Manual Share Process c:\winnt\system32\services.exe Normal LocalSystem 0
Computer Browser Browser Running Auto Share Process c:\winnt\system32\services.exe Normal LocalSystem 0
Indexing Service cisvc Stopped Manual Share Process c:\winnt\system32\cisvc.exe Normal LocalSystem 0
ClipBook ClipSrv Stopped Manual Own Process c:\winnt\system32\clipsrv.exe Normal LocalSystem 0
Distributed File System Dfs Running Auto Own Process c:\winnt\system32\dfssvc.exe Normal LocalSystem 0
DHCP Client Dhcp Running Auto Share Process c:\winnt\system32\services.exe Normal LocalSystem 0
Logical Disk Manager Administrative Service dmadmin Stopped Manual Share Process c:\winnt\system32\dmadmin.exe /com Normal LocalSystem 0
Logical Disk Manager dmserver Running Auto Share Process c:\winnt\system32\services.exe Normal LocalSystem 0

DNS Client Dnscache Running Auto Share Process c:\winnt\system32\services.exe Normal LocalSystem 0
Event Log Eventlog Running Auto Share Process c:\winnt\system32\services.exe Normal LocalSystem 0
COM+ Event System EventSystem Running Manual Share Process c:\winnt\system32\svchost.exe -k netsvcs Normal LocalSystem 0
Fax Service Fax Stopped Manual Own Process c:\winnt\system32\faxsvc.exe Normal LocalSystem 0
Internet Authentication Service IAS Running Auto Share Process c:\winnt\system32\svchost.exe -k netsvcs Normal LocalSystem 0
IIS Admin Service IISADMIN Running Auto Share Process c:\winnt\system32\inetsrv\inetinfo.exe Normal LocalSystem 0
Intersite Messaging IsmServ Stopped Disabled Own Process c:\winnt\system32\ismserv.exe Normal LocalSystem 0
Kerberos Key Distribution Center kdc Stopped Disabled Share Process c:\winnt\system32\lsass.exe Normal LocalSystem 0
Server lanmanserver Running Auto Share Process c:\winnt\system32\services.exe Normal LocalSystem 0
Workstation lanmanworkstation Running Auto Share Process c:\winnt\system32\services.exe Normal LocalSystem 0
License Logging Service LicenseService Running Auto Own Process c:\winnt\system32\llssrv.exe Normal LocalSystem 0
TCP/IP NetBIOS Helper Service LmHosts Running Auto Share Process c:\winnt\system32\services.exe Normal LocalSystem 0
Messenger Messenger Running Auto Share Process c:\winnt\system32\services.exe Normal LocalSystem 0
NetMeeting Remote Desktop Sharing mnmsrvc Stopped Manual Own Process c:\winnt\system32\mnmsrvc.exe Normal LocalSystem 0
Distributed Transaction Coordinator MSDTC Running Auto Own Process c:\winnt\system32\msdtc.exe Normal LocalSystem 0
Windows Installer MSIServer Stopped Manual Share Process c:\winnt\system32\msiexec.exe /v Normal LocalSystem 0
Network DDE NetDDE Stopped Manual Share Process c:\winnt\system32\netdde.exe Normal LocalSystem 0
Network DDE DSDM NetDDEdsdm Stopped Manual Share Process c:\winnt\system32\netdde.exe Normal LocalSystem 0
Net Logon Netlogon Stopped Manual Share Process c:\winnt\system32\lsass.exe Normal LocalSystem 0
Network Connections Netman Running Manual Share Process c:\winnt\system32\svchost.exe -k netsvcs Normal LocalSystem 0
File Replication NtFrs Stopped Manual Own Process c:\winnt\system32\ntfrs.exe Ignore LocalSystem 0
NT LM Security Support Provider NtLmSsp Stopped Manual Share Process c:\winnt\system32\lsass.exe Normal LocalSystem 0
Removable Storage NtmsSvc Running Auto Share Process c:\winnt\system32\svchost.exe -k netsvcs Normal LocalSystem 0
Plug and Play PlugPlay Running Auto Share Process c:\winnt\system32\services.exe Normal LocalSystem 0
IPSEC Policy Agent PolicyAgent Running Auto Share Process c:\winnt\system32\lsass.exe Normal LocalSystem 0
Protected Storage ProtectedStorage Running Auto Share Process c:\winnt\system32\services.exe Normal LocalSystem 0
Remote Access Auto Connection Manager RasAuto Stopped Manual Share Process c:\winnt\system32\svchost.exe -k netsvcs Normal LocalSystem 0
Remote Access Connection Manager RasMan Stopped Manual Share Process c:\winnt\system32\svchost.exe -k netsvcs Normal LocalSystem 0
Routing and Remote Access RemoteAccess Stopped Disabled Share Process c:\winnt\system32\svchost.exe -k netsvcs Normal LocalSystem 0
Remote Registry Service RemoteRegistry Running Auto Own Process c:\winnt\system32\regsvc.exe Normal LocalSystem 0
Remote Command Service RMSYS Running Auto Own Process c:\benchcraft\rsys.exe Normal LocalSystem 0
Remote Procedure Call (RPC) Locator RpcLocator Stopped Manual Own Process c:\winnt\system32\locator.exe Normal LocalSystem 0
Remote Procedure Call (RPC) RpcSs Running Auto Share Process c:\winnt\system32\svchost -k rpcss Normal LocalSystem 0
Remote Shell Service RshSvc Running Auto Own Process c:\winnt\system32\rshsvc.exe Normal LocalSystem 0
QoS RSVP RSVP Running Manual Own Process c:\winnt\system32\rsvp.exe -s Normal LocalSystem 0
Security Accounts Manager SamSs Running Auto Share Process c:\winnt\system32\lsass.exe Normal LocalSystem 0
Smart Card Helper SCardDrv Stopped Manual Share Process c:\winnt\system32\scardsvr.exe Ignore LocalSystem 0
Smart Card SCardSvr Stopped Manual Share Process c:\winnt\system32\scardsvr.exe Ignore LocalSystem 0
Task Scheduler Schedule Running Auto Share Process c:\winnt\system32\mstask.exe Normal LocalSystem 0
RunAs Service seclogon Running Auto Share Process c:\winnt\system32\services.exe Ignore LocalSystem 0
System Event Notification SENS Running Auto Share Process c:\winnt\system32\svchost.exe -k netsvcs Normal LocalSystem 0
Internet Connection Sharing SharedAccess Stopped Manual Share Process c:\winnt\system32\svchost.exe -k netsvcs Normal LocalSystem 0
Simple TCP/IP Services SimpTcp Running Auto Share Process c:\winnt\system32\tcpsvcs.exe Normal LocalSystem 0
Simple Mail Transport Protocol (SMTP) SMTPSVC Running Auto Share Process c:\winnt\system32\inetsrv\inetinfo.exe Normal LocalSystem 0
Print Spooler Spooler Running Auto Own Process c:\winnt\system32\spoolsv.exe Normal LocalSystem 0
Performance Logs and Alerts SysmonLog Stopped Manual Own Process c:\winnt\system32\smlogsvc.exe Normal LocalSystem 0
Telephony TapiSrv Running Manual Share Process c:\winnt\system32\svchost.exe -k tapisrv Normal LocalSystem 0
Terminal Services TermService Running Auto Own Process c:\winnt\system32\termsrv.exe Normal LocalSystem 0
Telnet TlntSvr Stopped Manual Own Process c:\winnt\system32\tlntsvr.exe Normal LocalSystem 0
Distributed Link Tracking Server TrkSvr Stopped Manual Share Process c:\winnt\system32\services.exe Normal LocalSystem 0
Distributed Link Tracking Client TrkWks Running Auto Share Process c:\winnt\system32\services.exe Normal LocalSystem 0

Uninterruptible Power Supply UPS Stopped Manual Own Process c:\winnt\system32\ups.exe Normal LocalSystem 0
Utility Manager UtilMan Stopped Manual Own Process c:\winnt\system32\utilman.exe Normal LocalSystem 0
Windows Time W32Time Stopped Manual Share Process c:\winnt\system32\services.exe Normal LocalSystem 0
World Wide Web Publishing Service W3SVC Running Auto Share Process c:\winnt\system32\inetsrv\inetinfo.exe Normal LocalSystem 0
Windows Management Instrumentation WinMgmt Running Auto Own Process c:\winnt\system32\wbem\winmgmt.exe Ignore LocalSystem 0
Windows Management Instrumentation Driver Extensions Wmi Running Manual Share Process c:\winnt\system32\services.exe Normal LocalSystem 0

[Program Groups]

Group Name Name User Name
Accessories Default User:Accessories Default User
Accessories\Accessibility Default User:Accessories\Accessibility Default User
Accessories\Entertainment Default User:Accessories\Entertainment Default User
Accessories\System Tools Default User:Accessories\System Tools Default User
Startup Default User:Startup Default User
Accessories All Users:Accessories All Users
Accessories\Communications All Users:Accessories\Communications All Users
Accessories\Entertainment All Users:Accessories\Entertainment All Users
Accessories\System Tools All Users:Accessories\System Tools All Users
Administrative Tools All Users:Administrative Tools All Users
Microsoft SQL Server All Users:Microsoft SQL Server All Users
Startup All Users:Startup All Users
Accessories RTCLIENT64\tpcc:Accessories RTCLIENT64\tpcc
Accessories\Accessibility RTCLIENT64\tpcc:Accessories\Accessibility RTCLIENT64\tpcc
Accessories\Entertainment RTCLIENT64\tpcc:Accessories\Entertainment RTCLIENT64\tpcc
Accessories\System Tools RTCLIENT64\tpcc:Accessories\System Tools RTCLIENT64\tpcc
Administrative Tools RTCLIENT64\tpcc:Administrative Tools RTCLIENT64\tpcc
Startup RTCLIENT64\tpcc:Startup RTCLIENT64\tpcc
Accessories RTCLIENT64\Administrator:Accessories RTCLIENT64\Administrator
Accessories\Accessibility RTCLIENT64\Administrator:Accessories\Accessibility RTCLIENT64\Administrator
Accessories\Entertainment RTCLIENT64\Administrator:Accessories\Entertainment RTCLIENT64\Administrator
Accessories\System Tools RTCLIENT64\Administrator:Accessories\System Tools RTCLIENT64\Administrator
Startup RTCLIENT64\Administrator:Startup RTCLIENT64\Administrator

[Startup Programs]

Program Command User Name Location
synctime synctime.cmd All Users Common Startup

[OLE Registration]

Object Local Server
Sound (OLE2) sndrec32.exe
Media Clip mplay32.exe
Video Clip mplay32.exe /avi
MIDI Sequence mplay32.exe /mid
Sound Not Available
Media Clip Not Available
Image Document "C:\Program Files\Windows NT\Accessories\ImageVue\KodakImg.exe"
WordPad Document "%ProgramFiles%\Windows NT\Accessories\WORDPAD.EXE"
Windows Media Services DRM Storage object Not Available
Bitmap Image mspaint.exe

[Internet Explorer 5]

[Following are sub-categories of this main category]

[Summary]

Item Value
Version 5.00.2920.0000
Build 52920
Product ID 51876-270-1133067-05431
Application Path C:\Program Files\Internet Explorer
Language English (United States)
Active Printer Not Available

Cipher Strength 56-bit
Content Advisor Disabled
IEAK Install No

[File Versions]

File Version Size Date Path Company
advapi32.dll 5.0.2191.1 349 KB 12/7/1999 7:00:00 AM C:\WINNT\system32 Microsoft Corporation
advpack.dll 5.0.2920.0 87 KB 12/7/1999 7:00:00 AM C:\WINNT\system32 Microsoft Corporation
browselc.dll 5.0.2920.0 35 KB 12/7/1999 7:00:00 AM C:\WINNT\system32 Microsoft Corporation
browseui.dll 5.0.2920.0 793 KB 12/7/1999 7:00:00 AM C:\WINNT\system32 Microsoft Corporation
ckcnv.exe 5.0.2189.1 9 KB 12/7/1999 7:00:00 AM C:\WINNT\system32 Microsoft Corporation
comctl32.dll 5.81.2920.0 540 KB 12/7/1999 7:00:00 AM C:\WINNT\system32 Microsoft Corporation
crypt32.dll 5.131.2173.1 466 KB 12/7/1999 7:00:00 AM C:\WINNT\system32 Microsoft Corporation
enhsig.dll <File Missing> Not Available Not Available Not Available Not Available
iemigrat.dll <File Missing> Not Available Not Available Not Available Not Available
iesetup.dll 5.0.2920.0 57 KB 12/7/1999 7:00:00 AM C:\WINNT\system32 Microsoft Corporation
iexplore.exe 5.0.2920.0 59 KB 12/7/1999 7:00:00 AM C:\Program Files\Internet Explorer Microsoft Corporation
imagehlp.dll 5.0.2195.1 125 KB 12/7/1999 7:00:00 AM C:\WINNT\system32 Microsoft Corporation
imghelp.dll <File Missing> Not Available Not Available Not Available

inseng.dll 5.0.2920.0 72 KB 12/7/1999 7:00:00 AM C:\WINNT\system32 Microsoft Corporation
jobexec.dll 5.0.0.1 47 KB 12/7/1999 7:00:00 AM C:\WINNT\system32 Microsoft Corporation
jscript.dll 5.1.0.4615 476 KB 12/7/1999 7:00:00 AM C:\WINNT\system32 Microsoft Corporation
jsproxy.dll 5.0.2920.0 13 KB 12/7/1999 7:00:00 AM C:\WINNT\system32 Microsoft Corporation
msaahtml.dll <File Missing> Not Available Not Available Not Available Not Available
mshtml.dll 5.0.2920.0 2302 KB 12/7/1999 7:00:00 AM C:\WINNT\system32 Microsoft Corporation
msjava.dll 5.0.3234.0 918 KB 12/7/1999 7:00:00 AM C:\WINNT\system32 Microsoft Corporation
msoss.dll <File Missing> Not Available Not Available Not Available Not Available
msxml.dll 5.0.2920.0 521 KB 12/7/1999 7:00:00 AM C:\WINNT\system32 Microsoft Corporation
occache.dll 5.0.2920.0 86 KB 12/7/1999 7:00:00 AM C:\WINNT\system32 Microsoft Corporation
ole32.dll 5.0.2181.1 966 KB 12/7/1999 7:00:00 AM C:\WINNT\system32 Microsoft Corporation
oleaut32.dll 2.40.4512.1 600 KB 12/7/1999 7:00:00 AM C:\WINNT\system32 Microsoft Corporation
olepro32.dll 5.0.4512.1 160 KB 12/7/1999 7:00:00 AM C:\WINNT\system32 Microsoft Corporation
rsabase.dll 5.0.2150.1 129 KB 12/7/1999 7:00:00 AM C:\WINNT\system32 Microsoft Corporation
rsaenh.dll <File Missing> Not Available Not Available Not Available Not Available
rsapi32.dll <File Missing> Not Available Not Available Not Available Not Available
rsasig.dll <File Missing> Not Available Not Available Not Available Not Available
schannel.dll 5.0.2170.0 140 KB 12/7/1999 7:00:00 AM C:\WINNT\system32 Microsoft Corporation
shdoc401.dll <File Missing> Not Available Not Available Not Available Not Available
shdocvw.dll 5.0.2920.0 1078 KB 12/7/1999 7:00:00 AM C:\WINNT\system32 Microsoft Corporation
shell32.dll 5.0.2920.0 2297 KB 12/7/1999 7:00:00 AM C:\WINNT\system32 Microsoft Corporation
shlwapi.dll 5.0.2920.0 283 KB 12/7/1999 7:00:00 AM C:\WINNT\system32 Microsoft Corporation
url.dll 5.0.2920.0 82 KB 12/7/1999 7:00:00 AM C:\WINNT\system32 Microsoft Corporation
urlmon.dll 5.0.2920.0 427 KB 12/7/1999 7:00:00 AM C:\WINNT\system32 Microsoft Corporation
vbscript.dll 5.1.0.4615 428 KB 12/7/1999 7:00:00 AM C:\WINNT\system32 Microsoft Corporation
webcheck.dll 5.0.2920.0 252 KB 12/7/1999 7:00:00 AM C:\WINNT\system32 Microsoft Corporation
win.com 5.0.2134.1 24 KB 12/7/1999 7:00:00 AM C:\WINNT\system32 Microsoft Corporation
wininet.dll 5.0.2920.0 457 KB 12/7/1999 7:00:00 AM C:\WINNT\system32 Microsoft Corporation
winsock.dll 3.10.0.103 3 KB 12/7/1999 7:00:00 AM C:\WINNT\system32 Microsoft Corporation
wintrust.dll 5.131.2143.1 162 KB 12/7/1999 7:00:00 AM C:\WINNT\system32 Microsoft Corporation
wsock.vxd <File Missing> Not Available Not Available Not Available Not Available
wsock32.dll 5.0.2152.1 21 KB 12/7/1999 7:00:00 AM C:\WINNT\system32 Microsoft Corporation
wsock32n.dll <File Missing> Not Available Not Available Not Available Not Available

[Connectivity]

Item	Value
Connection Preference	Never dial
EnableHttp1.1	1
ProxyHttp1.1	0

LAN Settings

AutoConfigProxy	wininet.dll
AutoProxyDetectMode	Enabled
AutoConfigURL	
Proxy	Disabled
ProxyServer	
ProxyOverride	

[Cache]

[Following are sub-categories of this main category]

[Summary]

Item	Value
Page Refresh Type	Automatic
Temporary Internet Files Folder	C:\Documents and Settings\tpcc\Local Settings\Temporary Internet Files
Total Disk Space	8675 MB
Available Disk Space	7055 MB
Maximum Cache Size	270 MB
Available Cache Size	271 MB

[List of Objects]

Program File	Status	CodeBase

No cached object information available

[Content]

[Following are sub-categories of this main category]

[Summary]

Item	Value
Content Advisor	Disabled

[Personal Certificates]

Issued To	Issued By	Validity	Signature Algorithm

No personal certificate information available

[Other People Certificates]

Issued To	Issued By	Validity	Signature Algorithm

No other people certificate information available

[Publishers]

Name

No publisher information available

[Security]

Zone	Security Level
Local intranet	Medium-low
Trusted sites	Low
Internet	Medium
Restricted sites	High

xSeries 220

This system configuration inventory was obtained from 1 of 4 clients (xSeries 220).
All 4 clients are identically configured.
System Information report written at: 03/19/2001 01:14:56 PM
[System Information]

[Following are sub-categories of this main category]

[System Summary]

Item Value
OS Name Microsoft Windows 2000 Server
Version 5.0.2195 Build 2195
OS Manufacturer Microsoft Corporation
System Name CLIENT10
System Manufacturer IBM
System Model IBM eserver xSeries 220 -[8645]-
System Type X86-based PC
Processor x86 Family 6 Model 8 Stepping 6 GenuineIntel ~933 Mhz
Processor x86 Family 6 Model 8 Stepping 6 GenuineIntel ~933 Mhz
BIOS Version IBM BIOS Ver 3.0
Windows Directory C:\WINNT
System Directory C:\WINNT\System32
Boot Device \Device\Harddisk0\Partition1
Locale United States
User Name CLIENT10\Administrator
Time Zone Eastern Standard Time
Total Physical Memory 654,808 KB
Available Physical Memory 558,516 KB
Total Virtual Memory 2,865,768 KB
Available Virtual Memory 2,678,784 KB
Page File Space 2,210,960 KB
Page File C:\pagefile.sys

[Hardware Resources]

[Following are sub-categories of this main category]

[Conflicts/Sharing]

Resource Device
No conflicted/shared resources

[DMA]

Channel Device Status
2 Standard floppy disk controller OK
4 Direct memory access controller OK

[Forced Hardware]

Device PNP Device ID
No Forced Hardware

[I/O]

Address Range Device Status
0x0000-0x203F PCI bus OK
0x0000-0x203F Direct memory access controller OK
0x03B0-0x03BB S3 Inc. Savage4 OK
0x03C0-0x03DF S3 Inc. Savage4 OK
0x2000-0x203F IBM Netfinity 10/100 Ethernet Adapter OK
0x0A79-0x0A79 ISAPNP Read Data Port OK
0x0279-0x0279 ISAPNP Read Data Port OK
0x02F4-0x02F7 ISAPNP Read Data Port OK
0x002E-0x002F Motherboard resources OK
0x0438-0x0439 Motherboard resources OK
0x0430-0x0437 Motherboard resources OK
0x0430-0x0437 Not Available OK
0x0060-0x0060 Standard 101/102-Key or Microsoft Natural PS/2 Keyboard OK
0x0064-0x0064 Standard 101/102-Key or Microsoft Natural PS/2 Keyboard OK
0x03F0-0x03F5 Standard floppy disk controller OK
0x03F7-0x03F7 Standard floppy disk controller OK
0x0378-0x037F Printer Port (LPT1) OK
0x03F8-0x03FF Communications Port (COM1) OK
0x02F8-0x02FF Communications Port (COM2) OK
0x0020-0x0021 Advanced programmable interrupt controller OK
0x00A0-0x00A1 Advanced programmable interrupt controller OK
0x0080-0x008F Direct memory access controller OK
0x00C0-0x00DF Direct memory access controller OK
0x0040-0x0043 System timer OK
0x0070-0x0073 System CMOS/real time clock OK
0x0061-0x0061 System speaker OK
0x00F0-0x00FF Numeric data processor OK
0x0600-0x0600 Motherboard resources OK
0x0374-0x0375 Motherboard resources OK
0x0377-0x0377 Motherboard resources OK
0x0F50-0x0F58 Motherboard resources OK
0x0700-0x070F Standard Dual Channel PCI IDE Controller OK
0x01F0-0x01F7 Primary IDE Channel OK
0x03F6-0x03F6 Primary IDE Channel OK
0x0170-0x0177 Secondary IDE Channel OK
0x0376-0x0376 Secondary IDE Channel OK
0x2040-0xFFFF PCI bus OK
0x2100-0x21FF Adaptec AIC-7892 Ultra160/m PCI SCSI Card OK
0x3000-0x3FFF DEC 21152 PCI to PCI bridge OK
0x3000-0x3FFF Intel(R) PRO/100+ Dual Port Server Adapter OK
0x3020-0x303F Intel(R) PRO/100+ Dual Port Server Adapter #2 OK

[IRQs]

IRQ Number Device
30 Microsoft ACPI-Compliant System
31 S3 Inc. Savage4
27 IBM Netfinity 10/100 Ethernet Adapter
1 Standard 101/102-Key or Microsoft Natural PS/2 Keyboard
12 PS/2 Compatible Mouse
6 Standard floppy disk controller
4 Communications Port (COM1)
3 Communications Port (COM2)
8 System CMOS/real time clock
13 Numeric data processor
14 Primary IDE Channel
10 Standard OpenHCD USB Host Controller
28 Adaptec AIC-7892 Ultra160/m PCI SCSI Card
24 Intel(R) PRO/100+ Dual Port Server Adapter
25 Intel(R) PRO/100+ Dual Port Server Adapter #2

[Memory]

Range Device Status
0xA0000-0xBFFFF PCI bus OK
0xA0000-0xBFFFF S3 Inc. Savage4 OK
0xF0000000-0xFCFFFFFF PCI bus OK
0xF0000000-0xFCFFFFFF S3 Inc. Savage4 OK

0xFD000000-0xFFFFFFFF PCI bus OK
0xFEB80000-0xFEBFFFFF S3 Inc. Savage4 OK
0xFEB7F000-0xFEB7FFFF IBM Netfinity 10/100 Ethernet Adapter OK
0xFEA00000-0xFEAFFFFF IBM Netfinity 10/100 Ethernet Adapter OK
0xFEB7E000-0xFEB7EFFF Standard OpenHCD USB Host Controller OK
0x28000000-0xECFFFFFF PCI bus OK
0xED000000-0xEFFFFFFF PCI bus OK
0xEFFFF000-0xEFFFFFFF Adaptec AIC-7892 Ultra160/m PCI SCSI Card OK
0xEE000000-0xEF1FFFFF DEC 21152 PCI to PCI bridge OK
0xECF00000-0xECFFFFFF DEC 21152 PCI to PCI bridge OK
0xECF00000-0xECFFFFFF Intel(R) PRO/100+ Dual Port Server Adapter OK
0xEF000000-0xEF0FFFFF Intel(R) PRO/100+ Dual Port Server Adapter OK
0xECF01000-0xECF01FFF Intel(R) PRO/100+ Dual Port Server Adapter #2 OK
0xEF100000-0xEF1FFFFF Intel(R) PRO/100+ Dual Port Server Adapter #2 OK

[Components]

[Following are sub-categories of this main category]

[Multimedia]

[Following are sub-categories of this main category]

[Audio Codecs]

Codec Manufacturer Description Status File Version Size Creation Date
c:\winnt\system32\iac25_32.ax Intel Corporation Indeo® audio software OK C:\WINNT\System32\IAC25_32.AX 2.05.53 195.00 KB (199,680 bytes) 12/7/1999 7:00:00 AM
c:\winnt\system32\msg723.acm Microsoft Corporation OK C:\WINNT\System32\MSG723.ACM 4.4.3385 106.77 KB (109,328 bytes) 2/5/2001 3:49:25 PM
c:\winnt\system32\lhacm.acm Microsoft Corporation OK C:\WINNT\System32\LHACM.ACM 4.4.3385 33.27 KB (34,064 bytes) 2/5/2001 3:49:25 PM
c:\winnt\system32\msgsm32.acm Microsoft Corporation OK C:\WINNT\System32\MSGSM32.ACM 5.00.2134.1 22.27 KB (22,800 bytes) 12/7/1999 7:00:00 AM
c:\winnt\system32\msg711.acm Microsoft Corporation OK C:\WINNT\System32\MSG711.ACM 5.00.2134.1 10.27 KB (10,512 bytes) 12/7/1999 7:00:00 AM
c:\winnt\system32\tssoft32.acm DSP GROUP, INC. OK C:\WINNT\System32\TSSOFT32.ACM 1.01 9.27 KB (9,488 bytes) 12/7/1999 7:00:00 AM
c:\winnt\system32\msadp32.acm Microsoft Corporation OK C:\WINNT\System32\MSADP32.ACM 5.00.2134.1 14.77 KB (15,120 bytes) 12/7/1999 7:00:00 AM
c:\winnt\system32\imaadp32.acm Microsoft Corporation OK C:\WINNT\System32\IMAADP32.ACM 5.00.2134.1 16.27 KB (16,656 bytes) 12/7/1999 7:00:00 AM

[Video Codecs]

Codec Manufacturer Description Status File Version Size Creation Date
c:\winnt\system32\ir50_32.dll Intel Corporation Indeo® video 5.10 OK C:\WINNT\System32\IR50_32.DLL R.5.10.15.2.55 737.50 KB (755,200 bytes) 12/7/1999 7:00:00 AM
c:\winnt\system32\iccvid.dll Radius Inc. OK C:\WINNT\System32\ICCVID.DLL 1.10.0.6 108.00 KB (110,592 bytes) 12/7/1999 7:00:00 AM
c:\winnt\system32\ir32_32.dll Intel(R) Corporation OK C:\WINNT\System32\IR32_32.DLL Not Available 194.50 KB (199,168 bytes) 12/7/1999 7:00:00 AM
c:\winnt\system32\msvidc32.dll Microsoft Corporation OK C:\WINNT\System32\MSVIDC32.DLL 5.00.2134.1 27.27 KB (27,920 bytes) 12/7/1999 7:00:00 AM
c:\winnt\system32\msh263.drv Microsoft Corporation OK C:\WINNT\System32\MSH263.DRV 4.4.3385 252.27 KB (258,320 bytes) 2/5/2001 3:49:00 PM
c:\winnt\system32\msh261.drv Microsoft Corporation OK C:\WINNT\System32\MSH261.DRV 4.4.3385 163.77 KB (167,696 bytes) 2/5/2001 3:49:25 PM
c:\winnt\system32\msrle32.dll Microsoft Corporation OK C:\WINNT\System32\MSRLE32.DLL 5.00.2134.1 10.77 KB (11,024 bytes) 12/7/1999 7:00:00 AM

[CD-ROM]

Item Value
Drive D:
Description CD-ROM Drive
Media Loaded False
Media Type CD-ROM
Name LITEON CD-ROM LTN485S
Manufacturer (Standard CD-ROM drives)
Status OK
Transfer Rate Not Available
SCSI Target ID 0
PNP Device ID IDE\CDROMLITEON_CD-ROM_LTN485S_____J U04____\5&326853DD&0&0.0.0

[Sound Device]

Item Value
No sound devices

[Display]

Item Value
Name S3 Inc. Savage4
PNP Device ID PCI\VEN_5333&DEV_8A22&SUBSYS_01C51014&REV_04\3&267 A616A&0&08
Adapter Type S3 Savage4, S3 compatible
Adapter Description S3 Inc. Savage4
Adapter RAM 8.00 MB (8,388,608 bytes)
Installed Drivers s3sav4.dll
Driver Version 5.01.840.0001
INF File s3sav4.inf (S3Inc section)
Color Planes 1
Color Table Entries 65536
Resolution 800 x 600 x 60 hertz
Bits/Pixel 16

[Infrared]

Item Value
No infrared devices

[Input]

[Following are sub-categories of this main category]

[Keyboard]

Item Value
Description Standard 101/102-Key or Microsoft Natural PS/2 Keyboard
Name Enhanced (101- or 102-key)
Layout 00000409
PNP Device ID ACPI\PNP0303\4&23FD4C84&0
NumberOfFunctionKeys 12

[Pointing Device]

Item Value
Hardware Type PS/2 Compatible Mouse
Number of Buttons 3
Status OK
PNP Device ID ACPI\PNP0F13\4&23FD4C84&0
Power Management Supported False
Double Click Threshold 6
Handedness Right Handed Operation

[Modem]

Item Value
No modems

[Network]

[Following are sub-categories of this main category]

[Adapter]

Item Value
Name [00000000] IBM Netfinity 10/100 Ethernet Adapter
Adapter Type Ethernet 802.3
Product Name IBM Netfinity 10/100 Ethernet Adapter
Installed True
PNP Device ID PCI\VEN_8086&DEV_1229&SUBSYS_105C1014&REV_08\3&267A616A&0&10
Last Reset 3/19/2001 8:05:54 AM
Index 0
Service Name E100B
IP Address 192.168.125.11
IP Subnet 255.255.255.0
Default IP Gateway Not Available
DHCP Enabled False
DHCP Server Not Available
DHCP Lease Expires Not Available
DHCP Lease Obtained Not Available
MAC Address 00:02:55:D4:77:D1
Service Name E100B
IRQ Number 27
I/O Port 0x2000-0x203F
Driver c:\winnt\system32\drivers\e100bnt5.sys (104720, 5.00.67.0000)

Name [00000001] Intel(R) PRO/100+ Dual Port Server Adapter
Adapter Type Ethernet 802.3
Product Name Intel(R) PRO/100+ Dual Port Server Adapter
Installed True
PNP Device ID PCI\VEN_8086&DEV_1229&SUBSYS_10F08086&REV_05\4&27ABF15E&0&2038
Last Reset 3/19/2001 8:05:54 AM
Index 1
Service Name E100B
IP Address 192.168.15.99
IP Subnet 255.255.255.0
Default IP Gateway Not Available
DHCP Enabled False
DHCP Server Not Available
DHCP Lease Expires Not Available
DHCP Lease Obtained Not Available
MAC Address 00:03:47:0D:AD:B8
Service Name E100B
IRQ Number 24
I/O Port 0x3000-0x3FFF
Driver c:\winnt\system32\drivers\e100bnt5.sys (104720, 5.00.67.0000)

Name [00000002] Intel(R) PRO/100+ Dual Port Server Adapter
Adapter Type Ethernet 802.3
Product Name Intel(R) PRO/100+ Dual Port Server Adapter
Installed True
PNP Device ID PCI\VEN_8086&DEV_1229&SUBSYS_10F08086&REV_05\4&27ABF15E&0&2838
Last Reset 3/19/2001 8:05:54 AM
Index 2
Service Name E100B
IP Address 192.168.15.199
IP Subnet 255.255.255.0
Default IP Gateway Not Available
DHCP Enabled False
DHCP Server Not Available
DHCP Lease Expires Not Available
DHCP Lease Obtained Not Available
MAC Address 00:03:47:0D:AD:B9
Service Name E100B
IRQ Number 25
I/O Port 0x3020-0x303F
Driver c:\winnt\system32\drivers\e100bnt5.sys (104720, 5.00.67.0000)

Name [00000003] RAS Async Adapter
Adapter Type Not Available
Product Name RAS Async Adapter
Installed True
PNP Device ID Not Available
Last Reset 3/19/2001 8:05:54 AM
Index 3
Service Name AsyncMac
IP Address Not Available
IP Subnet Not Available
Default IP Gateway Not Available
DHCP Enabled False
DHCP Server Not Available
DHCP Lease Expires Not Available
DHCP Lease Obtained Not Available
MAC Address Not Available
Service Name Not Available

Name [00000004] WAN Miniport (L2TP)
Adapter Type Not Available
Product Name WAN Miniport (L2TP)
Installed True
PNP Device ID ROOT\MS_L2TPMINIPORT\0000
Last Reset 3/19/2001 8:05:54 AM

Index 4
Service Name Rasl2tp
IP Address Not Available
IP Subnet Not Available
Default IP Gateway Not Available
DHCP Enabled False
DHCP Server Not Available
DHCP Lease Expires Not Available
DHCP Lease Obtained Not Available
MAC Address Not Available
Service Name Rasl2tp
Driver c:\winnt\system32\drivers\rasl2tp.sys (50800, 5.00.2179.1)

Name [00000005] WAN Miniport (PPTP)
Adapter Type Wide Area Network (WAN)
Product Name WAN Miniport (PPTP)
Installed True
PNP Device ID ROOT\MS_PPTPMINIPORT\0000
Last Reset 3/19/2001 8:05:54 AM
Index 5
Service Name PptpMiniport
IP Address Not Available
IP Subnet Not Available
Default IP Gateway Not Available
DHCP Enabled False
DHCP Server Not Available
DHCP Lease Expires Not Available
DHCP Lease Obtained Not Available
MAC Address 50:50:54:50:30:30
Service Name PptpMiniport
Driver c:\winnt\system32\drivers\raspptp.sys (47856, 5.00.2160.1)

Name [00000006] Direct Parallel
Adapter Type Not Available
Product Name Direct Parallel
Installed True
PNP Device ID ROOT\MS_PTIMINIPORT\0000
Last Reset 3/19/2001 8:05:54 AM
Index 6
Service Name Raspti
IP Address Not Available
IP Subnet Not Available
Default IP Gateway Not Available
DHCP Enabled False
DHCP Server Not Available
DHCP Lease Expires Not Available
DHCP Lease Obtained Not Available
MAC Address Not Available
Service Name Raspti
Driver c:\winnt\system32\drivers\raspti.sys (16880, 5.00.2146.1)

Name [00000007] WAN Miniport (IP)
Adapter Type Not Available
Product Name WAN Miniport (IP)
Installed True
PNP Device ID ROOT\MS_NDISWANIP\0000
Last Reset 3/19/2001 8:05:54 AM
Index 7
Service Name NdisWan
IP Address Not Available
IP Subnet Not Available
Default IP Gateway Not Available
DHCP Enabled False
DHCP Server Not Available
DHCP Lease Expires Not Available
DHCP Lease Obtained Not Available
MAC Address Not Available
Service Name NdisWan
Driver c:\winnt\system32\drivers\ndiswan.sys (90768, 5.00.2184.1)

Name [00000008] Intel(R) PRO/100+ Dual Port Server Adapter
Adapter Type Not Available
Product Name Intel(R) PRO/100+ Dual Port Server Adapter
Installed True
PNP Device ID Not Available
Last Reset 3/19/2001 8:05:54 AM
Index 8
Service Name E100B
IP Address 192.168.15.99
IP Subnet 255.255.255.0
Default IP Gateway Not Available
DHCP Enabled False
DHCP Server Not Available
DHCP Lease Expires Not Available
DHCP Lease Obtained Not Available
MAC Address 00:03:47:0D:AD:B8
Service Name Not Available

Name [00000009] Intel(R) PRO/100+ Dual Port Server Adapter
Adapter Type Not Available
Product Name Intel(R) PRO/100+ Dual Port Server Adapter
Installed True
PNP Device ID Not Available
Last Reset 3/19/2001 8:05:54 AM
Index 9
Service Name E100B
IP Address Not Available
IP Subnet Not Available
Default IP Gateway Not Available
DHCP Enabled True
DHCP Server Not Available
DHCP Lease Expires Not Available
DHCP Lease Obtained Not Available
MAC Address Not Available
Service Name Not Available

Name [00000010] Intel(R) PRO/100+ Dual Port Server Adapter
Adapter Type Not Available
Product Name Intel(R) PRO/100+ Dual Port Server Adapter
Installed True
PNP Device ID Not Available
Last Reset 3/19/2001 8:05:54 AM
Index 10
Service Name E100B
IP Address 192.168.125.11
IP Subnet 255.255.255.0
Default IP Gateway Not Available
DHCP Enabled False
DHCP Server Not Available
DHCP Lease Expires Not Available
DHCP Lease Obtained Not Available
MAC Address 00:02:55:D4:77:D1
Service Name Not Available

Name [00000011] Intel(R) PRO/100+ Dual Port Server Adapter
Adapter Type Not Available
Product Name Intel(R) PRO/100+ Dual Port Server Adapter
Installed True
PNP Device ID Not Available
Last Reset 3/19/2001 8:05:54 AM
Index 11
Service Name E100B
IP Address Not Available
IP Subnet Not Available
Default IP Gateway Not Available

DHCP Enabled True
DHCP Server Not Available
DHCP Lease Expires Not Available
DHCP Lease Obtained Not Available
MAC Address Not Available
Service Name Not Available

[Protocol]

Item Value
Name MSAFD Tcpip [TCP/IP]
ConnectionlessService False
GuaranteesDelivery True
GuaranteesSequencing True
MaximumAddressSize 16 bytes
MaximumMessageSize 0 bytes
MessageOriented False
MinimumAddressSize 16 bytes
PseudoStreamOriented False
SupportsBroadcasting False
SupportsConnectData False
SupportsDisconnectData False
SupportsEncryption False
SupportsExpeditedData True
SupportsGracefulClosing True
SupportsGuaranteedBandwidth False
SupportsMulticasting False

Name MSAFD Tcpip [UDP/IP]
ConnectionlessService True
GuaranteesDelivery False
GuaranteesSequencing False
MaximumAddressSize 16 bytes
MaximumMessageSize 65467 bytes
MessageOriented True
MinimumAddressSize 16 bytes
PseudoStreamOriented False
SupportsBroadcasting True
SupportsConnectData False
SupportsDisconnectData False
SupportsEncryption False
SupportsExpeditedData False
SupportsGracefulClosing False
SupportsGuaranteedBandwidth False
SupportsMulticasting True

Name RSVP UDP Service Provider
ConnectionlessService True
GuaranteesDelivery False
GuaranteesSequencing False
MaximumAddressSize 16 bytes
MaximumMessageSize 65467 bytes
MessageOriented True
MinimumAddressSize 16 bytes
PseudoStreamOriented False
SupportsBroadcasting True
SupportsConnectData False
SupportsDisconnectData False
SupportsEncryption True
SupportsExpeditedData False
SupportsGracefulClosing False
SupportsGuaranteedBandwidth False
SupportsMulticasting True

Name RSVP TCP Service Provider
ConnectionlessService False
GuaranteesDelivery True
GuaranteesSequencing True
MaximumAddressSize 16 bytes
MaximumMessageSize 0 bytes
MessageOriented False
MinimumAddressSize 16 bytes
PseudoStreamOriented False
SupportsBroadcasting False
SupportsConnectData False
SupportsDisconnectData False
SupportsEncryption True
SupportsExpeditedData True
SupportsGracefulClosing True
SupportsGuaranteedBandwidth False
SupportsMulticasting False

Name MSAFD NetBIOS

[\Device\NetBT_Tcpip_{979D4457-D388-4601-80B5-A16899D791E1}] SEQPACKET 8
ConnectionlessService False
GuaranteesDelivery True
GuaranteesSequencing True
MaximumAddressSize 20 bytes
MaximumMessageSize 64000 bytes
MessageOriented True
MinimumAddressSize 20 bytes
PseudoStreamOriented False
SupportsBroadcasting False
SupportsConnectData False
SupportsDisconnectData False
SupportsEncryption False
SupportsExpeditedData False
SupportsGracefulClosing False
SupportsGuaranteedBandwidth False
SupportsMulticasting False

Name MSAFD NetBIOS

[\Device\NetBT_Tcpip_{979D4457-D388-4601-80B5-A16899D791E1}] DATAGRAM 8
ConnectionlessService True
GuaranteesDelivery False
GuaranteesSequencing False
MaximumAddressSize 20 bytes
MaximumMessageSize 64000 bytes
MessageOriented True
MinimumAddressSize 20 bytes
PseudoStreamOriented False
SupportsBroadcasting True
SupportsConnectData False
SupportsDisconnectData False
SupportsEncryption False
SupportsExpeditedData False
SupportsGracefulClosing False
SupportsGuaranteedBandwidth False
SupportsMulticasting False

Name MSAFD NetBIOS

[\Device\NetBT_Tcpip_{949B5C72-3DD4-4846-A2D4-4E6333C49D13}] SEQPACKET 7
ConnectionlessService False
GuaranteesDelivery True
GuaranteesSequencing True
MaximumAddressSize 20 bytes
MaximumMessageSize 64000 bytes
MessageOriented True
MinimumAddressSize 20 bytes

PseudoStreamOriented False
SupportsBroadcasting False
SupportsConnectData False
SupportsDisconnectData False
SupportsEncryption False
SupportsExpeditedData False
SupportsGracefulClosing False
SupportsGuaranteedBandwidth False
SupportsMulticasting False

Name MSAFD NetBIOS

[\Device\NetBT_Tcpip_{949B5C72-3DD4-4846-A2D4-4E6333C49D13}] DATAGRAM 7
ConnectionlessService True
GuaranteesDelivery False
GuaranteesSequencing False
MaximumAddressSize 20 bytes
MaximumMessageSize 64000 bytes
MessageOriented True
MinimumAddressSize 20 bytes
PseudoStreamOriented False
SupportsBroadcasting True
SupportsConnectData False
SupportsDisconnectData False
SupportsEncryption False
SupportsExpeditedData False
SupportsGracefulClosing False
SupportsGuaranteedBandwidth False
SupportsMulticasting False

Name MSAFD NetBIOS

[\Device\NetBT_Tcpip_{C91C0CB5-B4E1-4EA6-B7CB-3907BC6D72D2}] SEQPACKET 6
ConnectionlessService False
GuaranteesDelivery True
GuaranteesSequencing True
MaximumAddressSize 20 bytes
MaximumMessageSize 64000 bytes
MessageOriented True
MinimumAddressSize 20 bytes
PseudoStreamOriented False
SupportsBroadcasting False
SupportsConnectData False
SupportsDisconnectData False
SupportsEncryption False
SupportsExpeditedData False
SupportsGracefulClosing False
SupportsGuaranteedBandwidth False
SupportsMulticasting False

Name MSAFD NetBIOS

[\Device\NetBT_Tcpip_{C91C0CB5-B4E1-4EA6-B7CB-3907BC6D72D2}] DATAGRAM 6
ConnectionlessService True
GuaranteesDelivery False
GuaranteesSequencing False
MaximumAddressSize 20 bytes
MaximumMessageSize 64000 bytes
MessageOriented True
MinimumAddressSize 20 bytes
PseudoStreamOriented False
SupportsBroadcasting True
SupportsConnectData False
SupportsDisconnectData False
SupportsEncryption False
SupportsExpeditedData False
SupportsGracefulClosing False
SupportsGuaranteedBandwidth False
SupportsMulticasting False

Name MSAFD NetBIOS

[\Device\NetBT_Tcpip_{4EE22FC7-83B6-45AD-AE3C-869D662F6E7D}] SEQPACKET 5
ConnectionlessService False
GuaranteesDelivery True
GuaranteesSequencing True
MaximumAddressSize 20 bytes
MaximumMessageSize 64000 bytes
MessageOriented True
MinimumAddressSize 20 bytes
PseudoStreamOriented False
SupportsBroadcasting False
SupportsConnectData False
SupportsDisconnectData False
SupportsEncryption False
SupportsExpeditedData False
SupportsGracefulClosing False
SupportsGuaranteedBandwidth False
SupportsMulticasting False

Name MSAFD NetBIOS

[\Device\NetBT_Tcpip_{4EE22FC7-83B6-45AD-AE3C-869D662F6E7D}] DATAGRAM 5
ConnectionlessService True
GuaranteesDelivery False
GuaranteesSequencing False
MaximumAddressSize 20 bytes
MaximumMessageSize 64000 bytes
MessageOriented True
MinimumAddressSize 20 bytes
PseudoStreamOriented False
SupportsBroadcasting True
SupportsConnectData False
SupportsDisconnectData False
SupportsEncryption False
SupportsExpeditedData False
SupportsGracefulClosing False
SupportsGuaranteedBandwidth False
SupportsMulticasting False

Name MSAFD NetBIOS

[\Device\NetBT_Tcpip_{F7D98B12-E5E5-4D36-AF7B-4F430C2D56C2}] SEQPACKET 0
ConnectionlessService False
GuaranteesDelivery True
GuaranteesSequencing True
MaximumAddressSize 20 bytes
MaximumMessageSize 64000 bytes
MessageOriented True
MinimumAddressSize 20 bytes
PseudoStreamOriented False
SupportsBroadcasting False
SupportsConnectData False
SupportsDisconnectData False
SupportsEncryption False
SupportsExpeditedData False
SupportsGracefulClosing False
SupportsGuaranteedBandwidth False
SupportsMulticasting False

Name MSAFD NetBIOS

[\Device\NetBT_Tcpip_{F7D98B12-E5E5-4D36-AF7B-4F430C2D56C2}] DATAGRAM 0
ConnectionlessService True
GuaranteesDelivery False
GuaranteesSequencing False
MaximumAddressSize 20 bytes
MaximumMessageSize 64000 bytes
MessageOriented True
MinimumAddressSize 20 bytes
PseudoStreamOriented False
SupportsBroadcasting True
SupportsConnectData False
SupportsDisconnectData False
SupportsEncryption False
SupportsExpeditedData False
SupportsGracefulClosing False
SupportsGuaranteedBandwidth False
SupportsMulticasting False

Name MSAFD NetBIOS

[\Device\NetBT_Tcpip_{57687CD0-D67F-47D8-BEC5-EFD99AB56155}] SEQPACKET 1
ConnectionlessService False
GuaranteesDelivery True
GuaranteesSequencing True
MaximumAddressSize 20 bytes
MaximumMessageSize 64000 bytes
MessageOriented True
MinimumAddressSize 20 bytes
PseudoStreamOriented False
SupportsBroadcasting False
SupportsConnectData False
SupportsDisconnectData False
SupportsEncryption False
SupportsExpeditedData False
SupportsGracefulClosing False
SupportsGuaranteedBandwidth False
SupportsMulticasting False

Name MSAFD NetBIOS

[\Device\NetBT_Tcpip_{57687CD0-D67F-47D8-BEC5-EFD99AB56155}] DATAGRAM 1
ConnectionlessService True
GuaranteesDelivery False
GuaranteesSequencing False
MaximumAddressSize 20 bytes
MaximumMessageSize 64000 bytes
MessageOriented True
MinimumAddressSize 20 bytes
PseudoStreamOriented False
SupportsBroadcasting True
SupportsConnectData False
SupportsDisconnectData False
SupportsEncryption False
SupportsExpeditedData False
SupportsGracefulClosing False
SupportsGuaranteedBandwidth False
SupportsMulticasting False

Name MSAFD NetBIOS

[\Device\NetBT_Tcpip_{EF97AFD3-EF48-4232-A0DE-483DD8621609}] SEQPACKET 2
ConnectionlessService False
GuaranteesDelivery True
GuaranteesSequencing True
MaximumAddressSize 20 bytes
MaximumMessageSize 64000 bytes
MessageOriented True
MinimumAddressSize 20 bytes
PseudoStreamOriented False
SupportsBroadcasting False
SupportsConnectData False
SupportsDisconnectData False
SupportsEncryption False
SupportsExpeditedData False
SupportsGracefulClosing False
SupportsGuaranteedBandwidth False
SupportsMulticasting False

Name MSAFD NetBIOS

[\Device\NetBT_Tcpip_{EF97AFD3-EF48-4232-A0DE-483DD8621609}] DATAGRAM 2
ConnectionlessService True
GuaranteesDelivery False
GuaranteesSequencing False
MaximumAddressSize 20 bytes
MaximumMessageSize 64000 bytes
MessageOriented True
MinimumAddressSize 20 bytes
PseudoStreamOriented False
SupportsBroadcasting True
SupportsConnectData False
SupportsDisconnectData False
SupportsEncryption False
SupportsExpeditedData False
SupportsGracefulClosing False
SupportsGuaranteedBandwidth False
SupportsMulticasting False

Name MSAFD NetBIOS

[\Device\NetBT_Tcpip_{9134BD2A-03E6-42E3-8007-99206B0A4909}] SEQPACKET 3
ConnectionlessService False
GuaranteesDelivery True
GuaranteesSequencing True
MaximumAddressSize 20 bytes
MaximumMessageSize 64000 bytes
MessageOriented True
MinimumAddressSize 20 bytes
PseudoStreamOriented False
SupportsBroadcasting False
SupportsConnectData False
SupportsDisconnectData False
SupportsEncryption False
SupportsExpeditedData False
SupportsGracefulClosing False
SupportsGuaranteedBandwidth False
SupportsMulticasting False

Name MSAFD NetBIOS

[\Device\NetBT_Tcpip_{9134BD2A-03E6-42E3-8007-99206B0A4909}] DATAGRAM 3
ConnectionlessService True
GuaranteesDelivery False
GuaranteesSequencing False
MaximumAddressSize 20 bytes
MaximumMessageSize 64000 bytes
MessageOriented True

MinimumAddressSize 20 bytes
PseudoStreamOriented False
SupportsBroadcasting True
SupportsConnectData False
SupportsDisconnectData False
SupportsEncryption False
SupportsExpeditedData False
SupportsGracefulClosing False
SupportsGuaranteedBandwidth False
SupportsMulticasting False

Name MSAFD NetBIOS

[\Device\NetBT_Tcpip_{A91C1FCE-AC2F-4F7F-8795-A7830CB6AE37}] SEQPACKET 4
ConnectionlessService False
GuaranteesDelivery True
GuaranteesSequencing True
MaximumAddressSize 20 bytes
MaximumMessageSize 64000 bytes
MessageOriented True
MinimumAddressSize 20 bytes
PseudoStreamOriented False
SupportsBroadcasting False
SupportsConnectData False
SupportsDisconnectData False
SupportsEncryption False
SupportsExpeditedData False
SupportsGracefulClosing False
SupportsGuaranteedBandwidth False
SupportsMulticasting False

Name MSAFD NetBIOS

[\Device\NetBT_Tcpip_{A91C1FCE-AC2F-4F7F-8795-A7830CB6AE37}] DATAGRAM 4
ConnectionlessService True
GuaranteesDelivery False
GuaranteesSequencing False
MaximumAddressSize 20 bytes
MaximumMessageSize 64000 bytes
MessageOriented True
MinimumAddressSize 20 bytes
PseudoStreamOriented False
SupportsBroadcasting True
SupportsConnectData False
SupportsDisconnectData False
SupportsEncryption False
SupportsExpeditedData False
SupportsGracefulClosing False
SupportsGuaranteedBandwidth False
SupportsMulticasting False

[WinSock]

Item Value
File c:\winnt\system32\winsock.dll
Version 3.10
Size 2.80 KB (2,864 bytes)

File c:\winnt\system32\wsock32.dll
Version 5.00.2152.1
Size 21.27 KB (21,776 bytes)

[Ports]

[Following are sub-categories of this main category]

[Serial]

Item Value
Name COM1
Status OK
PNP Device ID ACPI\PNP0501\1
Maximum Input Buffer Size 0
Maximum Output Buffer Size False
Settable Baud Rate True
Settable Data Bits True
Settable Flow Control True
Settable Parity True
Settable Parity Check True
Settable Stop Bits True
Settable RLSD True
Supports RLSD True
Supports 16 Bit Mode False
Supports Special Characters False
Baud Rate 9600
Bits/Byte 8
Stop Bits 1
Parity None
Busy 0
Abort Read/Write on Error 0
Binary Mode Enabled -1
Continue XMit on XOff 0
CTS Outflow Control 0
Discard NULL Bytes 0
DSR Outflow Control 0
DSR Sensitivity 0
DTR Flow Control Type Enable
EOF Character 0
Error Replace Character 0
Error Replacement Enabled 0
Event Character 0
Parity Check Enabled 0
RTS Flow Control Type Enable
XOff Character 19
XOffXMit Threshold 512
XOn Character 17
XOnXMit Threshold 2048
XOnXOff InFlow Control 0
XOnXOff OutFlow Control 0
IRQ Number 4
I/O Port 0x03F8-0x03FF
Driver c:\winnt\system32\drivers\serial.sys (62448, 5.00.2134.1)

Name COM2
Status OK
PNP Device ID ACPI\PNP0501\2
Maximum Input Buffer Size 0
Maximum Output Buffer Size False
Settable Baud Rate True
Settable Data Bits True
Settable Flow Control True
Settable Parity True
Settable Parity Check True
Settable Stop Bits True
Settable RLSD True
Supports RLSD True
Supports 16 Bit Mode False
Supports Special Characters False
Baud Rate 9600
Bits/Byte 8
Stop Bits 1
Parity None

Busy 0
Abort Read/Write on Error 0
Binary Mode Enabled -1
Continue XMit on XOff 0
CTS Outflow Control 0
Discard NULL Bytes 0
DSR Outflow Control 0
DSR Sensitivity 0
DTR Flow Control Type Enable
EOF Character 0
Error Replace Character 0
Error Replacement Enabled 0
Event Character 0
Parity Check Enabled 0
RTS Flow Control Type Enable
XOff Character 19
XOffXMit Threshold 512
XOn Character 17
XOnXMit Threshold 2048
XOnXOff InFlow Control 0
XOnXOff OutFlow Control 0
IRQ Number 3
I/O Port 0x02F8-0x02FF
Driver c:\winnt\system32\drivers\serial.sys (62448, 5.00.2134.1)

[Parallel]

Item Value
Name LPT1
PNP Device ID ACPI\PNP0400\1

[Storage]

[Following are sub-categories of this main category]

[Drives]

Item Value
Drive A:
Description 3 1/2 Inch Floppy Drive

Drive C:
Description Local Fixed Disk
Compressed False
File System NTFS
Size 16.94 GB (18,186,059,776 bytes)
Free Space 14.45 GB (15,512,948,736 bytes)
Volume Name
Volume Serial Number A8E078EC
Partition Disk #0, Partition #0
Partition Size 16.94 GB (18,186,061,824 bytes)
Starting Offset 32256 bytes
Drive Description Disk drive
Drive Manufacturer (Standard disk drives)
Drive Model IBM-PSG ST318436LW !# SCSI Disk Device
Drive BytesPerSector 512
Drive MediaLoaded True
Drive MediaType Fixed hard disk media
Drive Partitions 1
Drive SCSIBus 0
Drive SCSILogicalUnit 0
Drive SCSIPort 2
Drive SCSITargetId 0
Drive SectorsPerTrack 63
Drive Size 18194319360 bytes
Drive TotalCylinders 2212
Drive TotalSectors 35535780
Drive TotalTracks 564060
Drive TracksPerCylinder 255

[SCSI]

Item Value
Name Adaptec AIC-7892 Ultra160/m PCI SCSI Card
Caption Adaptec AIC-7892 Ultra160/m PCI SCSI Card
Driver adpu160m
Status OK
PNP Device ID
PCI\VEN_9005&DEV_008F&SUBSYS_008F9005&REV_02\3&13C0B0C5&0&18
Device ID
PCI\VEN_9005&DEV_008F&SUBSYS_008F9005&REV_02\3&13C0B0C5&0&18
Device Map Not Available
Index Not Available
Max Number Controlled Not Available
IRQ Number 28
I/O Port 0x2100-0x21FF
Driver c:\winnt\system32\drivers\adpu160m.sys (64432, v3.10a)

[Printing]

Name Port Name Server Name
No printing information

[Problem Devices]

Device PNP Device ID Error Code
Not Available ACPI\IBM37D1\4&23FD4C84&0 28

[USB]

Device PNP Device ID
Standard OpenHCD USB Host Controller
PCI\VEN_1166&DEV_0220&SUBSYS_02201166&REV_04\3&267A616A&0&7A
USB Root Hub USB\ROOT_HUB\4&372644EA&0

[Software Environment]

[Following are sub-categories of this main category]

[Drivers]

Name Description File Type Started
Start Mode State Status Error Control
Accept Pause Accept Stop
abiosdsk Abiosdsk Not Available Kernel Driver
False Disabled Stopped OK Ignore False
False
abp480n5 abp480n5 Not Available Kernel Driver
False Disabled Stopped OK Normal False
False
acpi Microsoft ACPI Driver
c:\winnt\system32\drivers\acpi.sys Kernel Driver
True Boot Running OK Normal False
True
acpiec ACPIEC c:\winnt\system32\drivers\acpiec.sys
Kernel Driver False Disabled Stopped OK
Normal False False

```
adpu160m adpu160m c:\winnt\system32\drivers\adpu160m.sys
Kernel Driver True Boot Running OK
Normal False True
afd AFD Networking Support Environment
c:\winnt\system32\drivers\afd.sysKernel Driver True
Auto Running OK Normal False True
aha154x Aha154x Not Available Kernel Driver
False Disabled Stopped OK Normal False
False
aic116x aic116x Not Available Kernel Driver
False Disabled Stopped OK Normal False
False
aic78u2 aic78u2 Not Available Kernel Driver
False Disabled Stopped OK Normal False
False
aic78xx aic78xx Not Available Kernel Driver
False Disabled Stopped OK Normal False
False
ami0nt ami0nt Not Available Kernel Driver
False Disabled Stopped OK Normal False
False
amsint amsint Not Available Kernel Driver
False Disabled Stopped OK Normal False
False
asc asc Not Available Kernel Driver
False Disabled Stopped OK Normal False
False
asc3350p asc3350p Not Available Kernel Driver
False Disabled Stopped OK Normal False
False
asc3550 asc3550 Not Available Kernel Driver
False Disabled Stopped OK Normal False
False
asyncmac RAS Asynchronous Media Driver
c:\winnt\system32\drivers\asyncmac.sys Kernel Driver
False Manual Stopped OK Normal False
False
atapi Standard IDE/ESDI Hard Disk Controller
c:\winnt\system32\drivers\atapi.sys Kernel Driver
True Boot Running OK Normal False
True
atdisk Atdisk Not Available Kernel Driver
False Disabled Stopped OK Ignore False
False
atmarpc ATM ARP Client Protocol
c:\winnt\system32\drivers\atmarpc.sys Kernel Driver
False Manual Stopped OK Normal False
False
audstub Audio Stub Driver
c:\winnt\system32\drivers\audstub.sys Kernel Driver
True Manual Running OK Normal False
True
beep Beep c:\winnt\system32\drivers\beep.sys
Kernel Driver True System Running OK
Normal False True
buslogic BusLogic Not Available Kernel Driver
False Disabled Stopped OK Normal False
False
cd20xrnt cd20xrnt Not Available Kernel Driver
False Disabled Stopped OK Normal False
False
cdaudio Cdaudio c:\winnt\system32\drivers\cdaudio.sys
Kernel Driver False System Stopped OK
Ignore False False
cdfs Cdfs c:\winnt\system32\drivers\cdfs.sys File
System Driver True Disabled Running OK
Normal False True
cdrom CD-ROM Driver c:\winnt\system32\drivers\cdrom.sys
Kernel Driver True System Running OK
Normal False True
changer Changer Not Available Kernel Driver
False System Stopped OK Ignore False
False
cpqarray Cpqarray Not Available Kernel Driver
False Disabled Stopped OK Normal False
False
cpqarry2 cpqarry2 Not Available Kernel Driver
False Disabled Stopped OK Normal False
False
cpqfcalm cpqfcalm Not Available Kernel Driver
False Disabled Stopped OK Normal False
False
cpqfws2e cpqfws2e Not Available Kernel Driver
False Disabled Stopped OK Normal False
False
dac960nt dac960nt Not Available Kernel Driver
False Disabled Stopped OK Normal False
False
deckzpsx deckzpsx Not Available Kernel Driver
False Disabled Stopped OK Normal False
False
dfsdriver DfsDriver c:\winnt\system32\drivers\dfs.sysFile System
Driver True Boot Running OK Normal
False True
disk Disk Driver c:\winnt\system32\drivers\disk.sys
Kernel Driver True Boot Running OK
Normal False True
diskperf Diskperf c:\winnt\system32\drivers\diskperf.sys
Kernel Driver True Boot Running OK
Normal False True
dmboot dmboot c:\winnt\system32\drivers\dmboot.sys
Kernel Driver False Disabled Stopped OK
Normal False False
dmio Logical Disk Manager Driver
c:\winnt\system32\drivers\dmio.sys Kernel Driver
True Boot Running OK Normal False
True
dmload dmload c:\winnt\system32\drivers\dmload.sys
Kernel Driver True Boot Running OK
Normal False True
e100b Intel(R) PRO Adapter Driver
c:\winnt\system32\drivers\e100bnt5.sys Kernel Driver
True Manual Running OK Normal False
True
efs EFS c:\winnt\system32\drivers\efs.sysFile System
Driver True Disabled Running OK Normal
False True
fastfat Fastfat c:\winnt\system32\drivers\fastfat.sys File
System Driver True Disabled Running OK
Normal False True
fd16_700 Fd16_700 Not Available Kernel Driver
False Disabled Stopped OK Normal False
False
fdc Floppy Disk Controller Driver
c:\winnt\system32\drivers\fdc.sysKernel Driver True
Manual Running OK Normal False True
fireport fireport Not Available Kernel Driver
False Disabled Stopped OK Normal False
False
flashpnt flashpnt Not Available Kernel Driver
False Disabled Stopped OK Normal False
False
flpydisk Floppy Disk Driver
c:\winnt\system32\drivers\flpydisk.sys Kernel Driver
```

```
True        Manual      Running     OK          Normal      False
True
ftdisk      Volume Manager Driver
c:\winnt\system32\drivers\ftdisk.sys        Kernel Driver
True        Boot        Running     OK          Normal      False
True
gpc         Generic Packet Classifier
c:\winnt\system32\drivers\msgpc.sys         Kernel Driver
True        Manual      Running     OK          Normal      False
True
i8042prt    i8042 Keyboard and PS/2 Mouse Port Driver
c:\winnt\system32\drivers\i8042prt.sys      Kernel Driver
True        System      Running     OK          Normal      False
True
ibmfe       IBM 10/100 Ethernet PCI Adapter NT Driver
c:\winnt\system32\drivers\ibmfent5.sys      Kernel Driver
False       Manual      Stopped     OK          Normal      False
False
ini910u     ini910u     Not Available           Kernel Driver
False       Disabled    Stopped     OK          Normal      False
False
intelide    IntelIde    Not Available           Kernel Driver
False       Disabled    Stopped     OK          Normal      False
False
ipfilterdriver          IP Traffic Filter Driver
c:\winnt\system32\drivers\ipfltdrv.sys      Kernel Driver
False       Manual      Stopped     OK          Normal      False
False
ipinip      IP in IP Tunnel Driverc:\winnt\system32\drivers\ipinip.sys
Kernel Driver           False       Manual      Stopped     OK
Normal      False       False
ipnat       IP Network Address Translator
c:\winnt\system32\drivers\ipnat.sys         Kernel Driver
False       Manual      Stopped     OK          Normal      False
False
ipsec       IPSEC driver            c:\winnt\system32\drivers\ipsec.sys
Kernel Driver           True        Manual      Running     OK
Normal      False       True
ipsraidn    ipsraidn    Not Available           Kernel Driver
False       Disabled    Stopped     OK          Normal      False
False
isapnp      PnP ISA/EISA Bus Driver
c:\winnt\system32\drivers\isapnp.sys        Kernel Driver
True        Boot        Running     OK          Critical    False
True
kbdclass    Keyboard Class Driver
c:\winnt\system32\drivers\kbdclass.sys      Kernel Driver
True        System      Running     OK          Normal      False
True
ksecdd      KSecDD      c:\winnt\system32\drivers\ksecdd.sys
Kernel Driver           True        Boot        Running     OK
Normal      False       True
lbrtfdc     lbrtfdc     Not Available           Kernel Driver
False       System      Stopped     OK          Ignore      False
False
lp6nds35    lp6nds35    Not Available           Kernel Driver
False       Disabled    Stopped     OK          Normal      False
False
mnmdd       mnmdd       c:\winnt\system32\drivers\mnmdd.sys
Kernel Driver           True        System      Running     OK
Ignore      False       True
modem       Modem       c:\winnt\system32\drivers\modem.sys
Kernel Driver           False       Manual      Stopped     OK
Ignore      False       False
mouclass    Mouse Class Driver
c:\winnt\system32\drivers\mouclass.sys      Kernel Driver
True        System      Running     OK          Normal      False
True
mountmgr    MountMgr    c:\winnt\system32\drivers\mountmgr.sys
Kernel Driver           True        Boot        Running     OK
Normal      False       True
mraid35x    mraid35x    Not Available           Kernel Driver
False       Disabled    Stopped     OK          Normal      False
False
mrxsmb      MRXSMB      c:\winnt\system32\drivers\mrxsmb.sys        File
System Driver           True        System      Running     OK
Normal      False       True
msfs        Msfs        c:\winnt\system32\drivers\msfs.sys          File
System Driver           True        System      Running     OK
Normal      False       True
mskssrv     Microsoft Streaming Service Proxy
c:\winnt\system32\drivers\mskssrv.sys       Kernel Driver
False       Manual      Stopped     OK          Normal      False
False
mspclock    Microsoft Streaming Clock Proxy
c:\winnt\system32\drivers\mspclock.sys      Kernel Driver
False       Manual      Stopped     OK          Normal      False
False
mspqm       Microsoft Streaming Quality Manager Proxy
c:\winnt\system32\drivers\mspqm.sys         Kernel Driver
False       Manual      Stopped     OK          Normal      False
False
mup         Mup         c:\winnt\system32\drivers\mup.sys           File
System Driver           True        Boot        Running     OK
Normal      False       True
ncrc710     Ncrc710     Not Available           Kernel Driver
False       Disabled    Stopped     OK          Normal      False
False
ndis        NDIS System Driver      c:\winnt\system32\drivers\ndis.sys
Kernel Driver           True        Boot        Running     OK
Normal      False       True
ndistapi    Remote Access NDIS TAPI Driver
c:\winnt\system32\drivers\ndistapi.sys      Kernel Driver
True        Manual      Running     OK          Normal      False
True
ndiswan     Remote Access NDIS WAN Driver
c:\winnt\system32\drivers\ndiswan.sys       Kernel Driver
True        Manual      Running     OK          Normal      False
True
ndproxy     NDIS Proxy
c:\winnt\system32\drivers\ndproxy.sys       Kernel Driver
True        Manual      Running     OK          Normal      False
True
netbios     NetBIOS Interface       c:\winnt\system32\drivers\netbios.sys
File System Driver      True        System      Running     OK
Normal      False       True
netbt       NetBios over Tcpip      c:\winnt\system32\drivers\netbt.sys
Kernel Driver           True        System      Running     OK
Normal      False       True
netdetect   NetDetect   c:\winnt\system32\drivers\netdtect.sys
Kernel Driver           False       Manual      Stopped     OK
Normal      False       False
npfs        Npfs        c:\winnt\system32\drivers\npfs.sys          File
System Driver           True        System      Running     OK
Normal      False       True
ntfs        Ntfs        c:\winnt\system32\drivers\ntfs.sys          File
System Driver           True        Disabled    Running     OK
Normal      False       True
null        Null        c:\winnt\system32\drivers\null.sys
Kernel Driver           True        System      Running     OK
Normal      False       True
nwlnkflt    IPX Traffic Filter Driver
c:\winnt\system32\drivers\nwlnkflt.sys      Kernel Driver
False       Manual      Stopped     OK          Normal      False
False
```

```
nwlnkfwd IPX Traffic Forwarder Driver
c:\winnt\system32\drivers\nwlnkfwd.sys Kernel Driver
False Manual Stopped OK Normal False
False
openhci Microsoft USB Open Host Controller Driver
c:\winnt\system32\drivers\openhci.sys Kernel Driver
True Manual Running OK Normal False
True
parallel Parallel class driver c:\winnt\system32\drivers\parallel.sys
Kernel Driver True Manual Running OK
Normal False True
parport Parallel port driver c:\winnt\system32\drivers\parport.sys
Kernel Driver True System Running OK
Ignore False True
partmgr PartMgr c:\winnt\system32\drivers\partmgr.sys
Kernel Driver True Boot Running OK
Normal False True
parvdm ParVdm c:\winnt\system32\drivers\parvdm.sys
Kernel Driver True Auto Running OK
Ignore False True
pci PCI Bus Driver c:\winnt\system32\drivers\pci.sys
Kernel Driver True Boot Running OK
Critical False True
pcidump PCIDump Not Available Kernel Driver
False System Stopped OK Ignore False
False
pciide PCIIde c:\winnt\system32\drivers\pciide.sys
Kernel Driver True Boot Running OK
Normal False True
pcmcia Pcmcia c:\winnt\system32\drivers\pcmcia.sys
Kernel Driver False Disabled Stopped OK
Normal False False
pcnet PCNET Adapter Driver
c:\winnt\system32\drivers\pcntn5m.sys Kernel Driver
False Manual Stopped OK Normal False
False
pdcomp PDCOMP Not Available Kernel Driver
False Manual Stopped OK Ignore False
False
pdframe PDFRAME Not Available Kernel Driver
False Manual Stopped OK Ignore False
False
pdreli PDRELI Not Available Kernel Driver
False Manual Stopped OK Ignore False
False
pdrframe PDRFRAME Not Available Kernel Driver
False Manual Stopped OK Ignore False
False
pptpminiport WAN Miniport (PPTP)
c:\winnt\system32\drivers\raspptp.sys Kernel Driver
True Manual Running OK Normal False
True
ptilink Direct Parallel Link Driver
c:\winnt\system32\drivers\ptilink.sys Kernel Driver
True Manual Running OK Normal False
True
ql1080 ql1080 Not Available Kernel Driver
False Disabled Stopped OK Normal False
False
ql10wnt Ql10wnt Not Available Kernel Driver
False Disabled Stopped OK Normal False
False
ql1240 ql1240 Not Available Kernel Driver
False Disabled Stopped OK Normal False
False
ql2100 ql2100 Not Available Kernel Driver
False Disabled Stopped OK Normal False
False
rasacd Remote Access Auto Connection Driver
c:\winnt\system32\drivers\rasacd.sys Kernel Driver
True System Running OK Normal False
True
rasl2tp WAN Miniport (L2TP)
c:\winnt\system32\drivers\rasl2tp.sys Kernel Driver
True Manual Running OK Normal False
True
raspti Direct Parallel c:\winnt\system32\drivers\raspti.sys
Kernel Driver True Manual Running OK
Normal False True
rca Microsoft Streaming Network Raw Channel Access
c:\winnt\system32\drivers\rca.sysKernel Driver False
Manual Stopped OK Normal False False
rdbss Rdbss c:\winnt\system32\drivers\rdbss.sys File
System Driver True System Running OK
Normal False True
rdpwd RDPWD c:\winnt\system32\drivers\rdpwd.sys
Kernel Driver False Manual Stopped OK
Ignore False False
redbook Digital CD Audio Playback Filter Driver
c:\winnt\system32\drivers\redbook.sys Kernel Driver
False System Stopped OK Normal False
False
s3inc S3Inc c:\winnt\system32\drivers\s3sav4m.sys
Kernel Driver True Manual Running OK
Ignore False True
serenum Serenum Filter Driver
c:\winnt\system32\drivers\serenum.sys Kernel Driver
True Manual Running OK Normal False
True
serial Serial port driver c:\winnt\system32\drivers\serial.sys
Kernel Driver True System Running OK
Ignore False True
sfloppy Sfloppy c:\winnt\system32\drivers\sfloppy.sys
Kernel Driver False System Stopped OK
Ignore False False
sglfb sglfb Not Available Kernel Driver
False System Stopped OK Normal False
False
simbad Simbad Not Available Kernel Driver
False Disabled Stopped OK Normal False
False
sparrow Sparrow Not Available Kernel Driver
False Disabled Stopped OK Normal False
False
spud Special Purpose Utility Driver
c:\winnt\system32\drivers\spud.sys Kernel Driver
True Manual Running OK Normal False
True
srv Srv c:\winnt\system32\drivers\srv.sysFile System
Driver True Manual Running OK Normal
False True
swenum Software Bus Driver
c:\winnt\system32\drivers\swenum.sys Kernel Driver
True Manual Running OK Normal False
True
symc810 symc810 Not Available Kernel Driver
False Disabled Stopped OK Normal False
False
symc8xx symc8xx Not Available Kernel Driver
False Disabled Stopped OK Normal False
False
sym_hi sym_hi Not Available Kernel Driver
False Disabled Stopped OK Normal False
False
tcpip TCP/IP Protocol Driver
c:\winnt\system32\drivers\tcpip.sys Kernel Driver
```

True System Running OK Normal False
True
tdasync TDASYNC c:\winnt\system32\drivers\tdasync.sys
Kernel Driver False Manual Stopped OK
Ignore False False
tdipx TDIPX c:\winnt\system32\drivers\tdipx.sys
Kernel Driver False Manual Stopped OK
Ignore False False
tdnetb TDNETB c:\winnt\system32\drivers\tdnetb.sys
Kernel Driver False Manual Stopped OK
Ignore False False
tdpipe TDPIPE c:\winnt\system32\drivers\tdpipe.sys
Kernel Driver False Manual Stopped OK
Ignore False False
tdspx TDSPX c:\winnt\system32\drivers\tdspx.sys
Kernel Driver False Manual Stopped OK
Ignore False False
tdtcp TDTCP c:\winnt\system32\drivers\tdtcp.sys
Kernel Driver False Manual Stopped OK
Ignore False False
termdd Terminal Device Driver
c:\winnt\system32\drivers\termdd.sys Kernel Driver
False Disabled Stopped OK Normal False
False
tga tga Not Available Kernel Driver
False System Stopped OK Ignore False
False
udfs Udfs c:\winnt\system32\drivers\udfs.sys File
System Driver False Disabled Stopped OK
Normal False False
ultra66 ultra66 Not Available Kernel Driver
False Disabled Stopped OK Normal False
False
update Microcode Update Driver
c:\winnt\system32\drivers\update.sys Kernel Driver
True Manual Running OK Normal False
True
usbhub Microsoft USB Standard Hub Driver
c:\winnt\system32\drivers\usbhub.sys Kernel Driver
True Manual Running OK Normal False
True
vgasave VgaSave c:\winnt\system32\drivers\vga.sys
Kernel Driver True System Running OK
Ignore False True
wanarp Remote Access IP ARP Driver
c:\winnt\system32\drivers\wanarp.sys Kernel Driver
True Manual Running OK Normal False
True
wdica WDICA Not Available Kernel Driver
False Manual Stopped OK Ignore False
False

[Environment Variables]

Variable Value User Name
ComSpec %SystemRoot%\system32\cmd.exe <SYSTEM>
Os2LibPath %SystemRoot%\system32\os2\dll;
<SYSTEM>
Path
%SystemRoot%\system32;%SystemRoot%;%SystemRoot%\System32\
Wbem;C:\Program Files\Microsoft SQL Server\80\Tools\BINN
<SYSTEM>
windir %SystemRoot% <SYSTEM>
OS Windows_NT <SYSTEM>
PROCESSOR_ARCHITECTURE x86 <SYSTEM>
PROCESSOR_LEVEL 6 <SYSTEM>
PROCESSOR_IDENTIFIER x86 Family 6 Model 8 Stepping 6,
GenuineIntel <SYSTEM>
PROCESSOR_REVISION 0806 <SYSTEM>
NUMBER_OF_PROCESSORS 2 <SYSTEM>
PATHEXT
.COM;.EXE;.BAT;.CMD;.VBS;.VBE;.JS;.JSE;.WSF;.WSH
<SYSTEM>
TEMP %SystemRoot%\TEMP <SYSTEM>
TMP %SystemRoot%\TEMP <SYSTEM>
TEMP %USERPROFILE%\Local Settings\Temp
CLIENT10\Administrator
TMP %USERPROFILE%\Local Settings\Temp
CLIENT10\Administrator

[Jobs]

[Following are sub-categories of this main category]

[Print]

Document Size Owner Notify Status Time
Submitted Start Time Until Time Elapsed Time Pages Printed
Job ID Priority Parameters Driver Name Print Processor
Host Print Queue Data Type Name
No print jobs

[Network Connections]

Local Name Remote Name Type Status
User Name
No network connections information

[Running Tasks]

Name Path Process ID Priority Min Working Set
Max Working Set Start Time Version Size File Date
system idle process Not Available 0 0 Not
Available Not Available Not Available Unknown
Unknown Unknown
system Not Available 8 8 0
1413120 Not Available Unknown Unknown Unknown
smss.exe c:\winnt\system32\smss.exe 168 11
204800 1413120 3/19/2001 1:06:11 PM 5.00.2170.1
44.27 KB (45,328 bytes) 12/7/1999 7:00:00 AM
csrss.exe Not Available 188 13 Not Available
Not Available 3/19/2001 1:06:16 PM Unknown
Unknown Unknown
winlogon.exe c:\winnt\system32\winlogon.exe 184 13
204800 1413120 3/19/2001 1:06:17 PM 5.00.2182.1
173.27 KB (177,424 bytes) 12/7/1999 7:00:00 AM
services.exe c:\winnt\system32\services.exe 236 9
204800 1413120 3/19/2001 1:06:18 PM 5.00.2134.1
86.77 KB (88,848 bytes) 12/7/1999 7:00:00 AM
lsass.exe c:\winnt\system32\lsass.exe 248 13
204800 1413120 3/19/2001 1:06:18 PM 5.00.2184.1
32.77 KB (33,552 bytes) 12/7/1999 7:00:00 AM
svchost.exe c:\winnt\system32\svchost.exe 408 8
204800 1413120 3/19/2001 1:06:22 PM 5.00.2134.1
7.77 KB (7,952 bytes) 12/7/1999 7:00:00 AM
spoolsv.exe c:\winnt\system32\spoolsv.exe 436 8
204800 1413120 3/19/2001 1:06:23 PM 5.00.2161.1
43.77 KB (44,816 bytes) 2/5/2001 9:57:15 AM
msdtc.exe c:\winnt\system32\msdtc.exe 464 8
204800 1413120 3/19/2001 1:06:23 PM 1999.9.3421.3
6.77 KB (6,928 bytes) 2/5/2001 10:44:17 AM
svchost.exe c:\winnt\system32\svchost.exe 596 8
204800 1413120 3/19/2001 1:06:25 PM 5.00.2134.1
7.77 KB (7,952 bytes) 12/7/1999 7:00:00 AM

llssrv.exe c:\winnt\system32\llssrv.exe 620 9 204800 1413120 3/19/2001 1:06:25 PM 5.00.2167.1 114.27 KB (117,008 bytes) 12/7/1999 7:00:00 AM
regsvc.exe c:\winnt\system32\regsvc.exe 664 8 204800 1413120 3/19/2001 1:06:26 PM 5.00.2155.1 65.27 KB (66,832 bytes) 12/7/1999 7:00:00 AM
rsvp.exe c:\winnt\system32\rsvp.exe 704 8 204800 1413120 3/19/2001 1:06:26 PM 5.00.2167.1 172.77 KB (176,912 bytes) 12/7/1999 7:00:00 AM
mstask.exe c:\winnt\system32\mstask.exe 724 8 204800 1413120 3/19/2001 1:06:27 PM 4.71.2137.1 115.27 KB (118,032 bytes) 2/5/2001 3:49:15 PM
tcpsvcs.exe c:\winnt\system32\tcpsvcs.exe 788 8 204800 1413120 3/19/2001 1:06:28 PM 5.00.2134.1 24.77 KB (25,360 bytes) 12/7/1999 7:00:00 AM
winmgmt.exe c:\winnt\system32\wbem\winmgmt.exe 880 8 204800 1413120 3/19/2001 1:06:34 PM 1.50.1085.0001 188.05 KB (192,567 bytes) 12/7/1999 7:00:00 AM
inetinfo.exe c:\winnt\system32\inetsrv\inetinfo.exe 916 8 204800 1413120 3/19/2001 1:06:35 PM 5.00.0984 14.27 KB (14,608 bytes) 2/5/2001 10:44:54 AM
dfssvc.exe c:\winnt\system32\dfssvc.exe 948 8 204800 1413120 3/19/2001 1:06:35 PM 5.00.2191.1 85.27 KB (87,312 bytes) 12/7/1999 7:00:00 AM
explorer.exe c:\winnt\explorer.exe 1052 8 204800 1413120 3/19/2001 1:06:38 PM 5.00.2920.0000 232.77 KB (238,352 bytes) 12/7/1999 7:00:00 AM
promon.exe c:\winnt\system32\promon.exe 1088 8 204800 1413120 3/19/2001 1:06:39 PM 1.11 28.50 KB (29,184 bytes) 2/8/2001 12:31:42 PM
mmc.exe c:\winnt\system32\mmc.exe 1252 8 204800 1413120 3/19/2001 1:06:54 PM 5.00.2153.1 589.27 KB (603,408 bytes) 12/7/1999 7:00:00 AM
svchost.exe c:\winnt\system32\svchost.exe 1308 8 204800 1413120 3/19/2001 1:06:58 PM 5.00.2134.1 7.77 KB (7,952 bytes) 12/7/1999 7:00:00 AM
mdm.exe c:\winnt\system32\mdm.exe 1264 8 204800 1413120 3/19/2001 1:08:54 PM 6.00.8424 121.29 KB (124,200 bytes) 2/5/2001 10:46:52 AM

[Loaded Modules]

Name Version Size File Date Manufacturer Path
mdm.exe 6.00.8424 121.29 KB (124,200 bytes) 2/5/2001 10:46:52 AM Microsoft Corporation c:\winnt\system32\mdm.exe
tapisrv.dll 5.00.2186.1 168.77 KB (172,816 bytes) 12/7/1999 7:00:00 AM Microsoft Corporation c:\winnt\system32\tapisrv.dll
olepro32.dll 5.0.4512 160.27 KB (164,112 bytes) 12/7/1999 7:00:00 AM Microsoft Corporation c:\winnt\system32\olepro32.dll
dmocx.dll 5.00.2134.1 23.27 KB (23,824 bytes) 12/7/1999 7:00:00 AM Microsoft Corporation c:\winnt\system32\dmocx.dll
wbemprox.dll 1.50.1085.0001 40.05 KB (41,016 bytes) 12/7/1999 7:00:00 AM Microsoft Corporation c:\winnt\system32\wbem\wbemprox.dll
rassapi.dll 5.00.2188.1 14.27 KB (14,608 bytes) 12/7/1999 7:00:00 AM Microsoft Corporation c:\winnt\system32\rassapi.dll
adsnt.dll 5.00.2191.1 194.27 KB (198,928 bytes) 12/7/1999 7:00:00 AM Microsoft Corporation c:\winnt\system32\adsnt.dll
dbghelp.dll 5.00.2195.1 159.27 KB (163,088 bytes) 12/7/1999 7:00:00 AM Microsoft Corporation c:\winnt\system32\dbghelp.dll
localsec.dll 5.00.2134.1 227.27 KB (232,720 bytes) 12/7/1999 7:00:00 AM Microsoft Corporation c:\winnt\system32\localsec.dll
devmgr.dll 5.00.2166.1 215.77 KB (220,944 bytes) 12/7/1999 7:00:00 AM Microsoft Corporation c:\winnt\system32\devmgr.dll
filemgmt.dll 5.00.2134.1 287.27 KB (294,160 bytes) 12/7/1999 7:00:00 AM Microsoft Corporation c:\winnt\system32\filemgmt.dll
pdh.dll 5.00.2174.1 143.27 KB (146,704 bytes) 12/7/1999 7:00:00 AM Microsoft Corporation c:\winnt\system32\pdh.dll
smlogcfg.dll 5.00.2163.1 273.27 KB (279,824 bytes) 12/7/1999 7:00:00 AM Microsoft Corporation c:\winnt\system32\smlogcfg.dll
cabinet.dll 5.00.2147.1 54.77 KB (56,080 bytes) 12/7/1999 7:00:00 AM Microsoft Corporation c:\winnt\system32\cabinet.dll
msinfo32.dll 5.00.2177.1 312.27 KB (319,760 bytes) 2/5/2001 3:49:22 PM Microsoft Corporation c:\program files\common files\microsoft shared\msinfo\msinfo32.dll
riched20.dll 5.30.23.1200 421.27 KB (431,376 bytes) 12/7/1999 7:00:00 AM Microsoft Corporation c:\winnt\system32\riched20.dll
riched32.dll 5.00.2134.1 3.77 KB (3,856 bytes) 12/7/1999 7:00:00 AM Microsoft Corporation c:\winnt\system32\riched32.dll
els.dll 5.00.2175.1 151.27 KB (154,896 bytes) 12/7/1999 7:00:00 AM Microsoft Corporation c:\winnt\system32\els.dll
ntmsmgr.dll 1,0,0,1 427.77 KB (438,032 bytes) 12/7/1999 7:00:00 AM Microsoft Corporation and HighGround Systems, Inc. c:\winnt\system32\ntmsmgr.dll
mmfutil.dll 1.50.1085.0000 32.06 KB (32,829 bytes) 12/7/1999 7:00:00 AM Microsoft Corporation c:\winnt\system32\mmfutil.dll
logdrive.dll 1.50.1085.0000 200.06 KB (204,863 bytes) 12/7/1999 7:00:00 AM Microsoft Corporation c:\winnt\system32\logdrive.dll
dfrgres.dll 5.00.2150.1 27.50 KB (28,160 bytes) 12/7/1999 7:00:00 AM Executive Software International, Inc. c:\winnt\system32\dfrgres.dll
dfrgsnap.dll 5.00.2150.1 41.77 KB (42,768 bytes) 12/7/1999 7:00:00 AM Executive Software International, Inc. c:\winnt\system32\dfrgsnap.dll
dmdskres.dll 2191.1.296.2 119.00 KB (121,856 bytes) 12/7/1999 7:00:00 AM Microsoft Corp., VERITAS Software c:\winnt\system32\dmdskres.dll
dmutil.dll 2191.1.296.2 41.77 KB (42,768 bytes) 12/7/1999 7:00:00 AM VERITAS Software Corp. c:\winnt\system32\dmutil.dll
ntmsapi.dll 5.00.1948.1 50.27 KB (51,472 bytes) 12/7/1999 7:00:00 AM Microsoft Corporation c:\winnt\system32\ntmsapi.dll
dmdskmgr.dll 2191.1.296.2 158.77 KB (162,576 bytes) 12/7/1999 7:00:00 AM Microsoft Corp., VERITAS Software c:\winnt\system32\dmdskmgr.dll
mycomput.dll 5.00.2134.1 107.77 KB (110,352 bytes) 12/7/1999 7:00:00 AM Microsoft Corporation c:\winnt\system32\mycomput.dll
mmcndmgr.dll 5.00.2178.1 815.27 KB (834,832 bytes) 12/7/1999 7:00:00 AM Microsoft Corporation c:\winnt\system32\mmcndmgr.dll

mmc.exe 5.00.2153.1 589.27 KB (603,408 bytes) 12/7/1999 7:00:00 AM Microsoft Corporation c:\winnt\system32\mmc.exe
promon.exe 1.11 28.50 KB (29,184 bytes) 2/8/2001 12:31:42 PM Intel Corporation c:\winnt\system32\promon.exe
jscript.dll 5.1.0.4615 476.06 KB (487,481 bytes) 12/7/1999 7:00:00 AM Microsoft Corporation c:\winnt\system32\jscript.dll
imm32.dll 5.00.2180.1 93.77 KB (96,016 bytes) 12/7/1999 7:00:00 AM Microsoft Corporation c:\winnt\system32\imm32.dll
mshtmled.dll 5.00.2920.0000 230.27 KB (235,792 bytes) 12/7/1999 7:00:00 AM Microsoft Corporation c:\winnt\system32\mshtmled.dll
thumbvw.dll 5.00.2920.0000 183.27 KB (187,664 bytes) 12/7/1999 7:00:00 AM Microsoft Corporation c:\winnt\system32\thumbvw.dll
usp10.dll 1.0325.2180.1 307.77 KB (315,152 bytes) 12/7/1999 7:00:00 AM Microsoft Corporation c:\winnt\system32\usp10.dll
faxshell.dll 5.00.2134.1 8.27 KB (8,464 bytes) 12/7/1999 7:00:00 AM Microsoft Corporation c:\winnt\system32\faxshell.dll
msacm32.dll 5.00.2134.1 65.27 KB (66,832 bytes) 12/7/1999 7:00:00 AM Microsoft Corporation c:\winnt\system32\msacm32.dll
avifil32.dll 5.00.2134.1 76.27 KB (78,096 bytes) 12/7/1999 7:00:00 AM Microsoft Corporation c:\winnt\system32\avifil32.dll
msvfw32.dll 5.00.2134.1 113.77 KB (116,496 bytes) 12/7/1999 7:00:00 AM Microsoft Corporation c:\winnt\system32\msvfw32.dll
docprop2.dll 5.00.2178.1 297.77 KB (304,912 bytes) 12/7/1999 7:00:00 AM Microsoft Corporation c:\winnt\system32\docprop2.dll
webvw.dll 5.00.2920.0000 1.06 MB (1,115,408 bytes) 12/7/1999 7:00:00 AM Microsoft Corporation c:\winnt\system32\webvw.dll
msls31.dll 3.10.337.0 145.27 KB (148,752 bytes) 12/7/1999 7:00:00 AM Microsoft Corporation c:\winnt\system32\msls31.dll
msdbg.dll 6.00.8424 67.50 KB (69,120 bytes) 2/5/2001 10:46:52 AM Microsoft Corporation c:\winnt\system32\msdbg.dll
shdoclc.dll 5.00.2920.0000 324.50 KB (332,288 bytes) 12/7/1999 7:00:00 AM Microsoft Corporation c:\winnt\system32\shdoclc.dll
pdm.dll 6.00.8424 179.27 KB (183,574 bytes) 2/5/2001 10:46:52 AM Microsoft Corporation c:\winnt\system32\pdm.dll
mshtml.dll 5.00.2920.0000 2.25 MB (2,357,008 bytes) 12/7/1999 7:00:00 AM Microsoft Corporation c:\winnt\system32\mshtml.dll
mlang.dll 5.00.2920.0000 510.77 KB (523,024 bytes) 12/7/1999 7:00:00 AM Microsoft Corporation c:\winnt\system32\mlang.dll
urlmon.dll 5.00.2920.0000 426.77 KB (437,008 bytes) 12/7/1999 7:00:00 AM Microsoft Corporation c:\winnt\system32\urlmon.dll
browselc.dll 5.00.2920.0000 34.50 KB (35,328 bytes) 12/7/1999 7:00:00 AM Microsoft Corporation c:\winnt\system32\browselc.dll
wininet.dll 5.00.2920.0000 456.77 KB (467,728 bytes) 12/7/1999 7:00:00 AM Microsoft Corporation c:\winnt\system32\wininet.dll
linkinfo.dll 5.00.2134.1 15.77 KB (16,144 bytes) 12/7/1999 7:00:00 AM Microsoft Corporation c:\winnt\system32\linkinfo.dll
powrprof.dll 5.00.2920.0000 13.27 KB (13,584 bytes) 12/7/1999 7:00:00 AM Microsoft Corporation c:\winnt\system32\powrprof.dll
batmeter.dll 5.00.2920.0000 20.27 KB (20,752 bytes) 12/7/1999 7:00:00 AM Microsoft Corporation c:\winnt\system32\batmeter.dll
stobject.dll 5.00.2144.1 81.77 KB (83,728 bytes) 12/7/1999 7:00:00 AM Microsoft Corporation c:\winnt\system32\stobject.dll
msi.dll 1.10.1029.0 1.71 MB (1,794,320 bytes) 12/7/1999 7:00:00 AM Microsoft Corporation c:\winnt\system32\msi.dll
webcheck.dll 5.00.2920.0000 251.77 KB (257,808 bytes) 12/7/1999 7:00:00 AM Microsoft Corporation c:\winnt\system32\webcheck.dll
ntshrui.dll 5.00.2134.1 46.77 KB (47,888 bytes) 12/7/1999 7:00:00 AM Microsoft Corporation c:\winnt\system32\ntshrui.dll
mydocs.dll 5.00.2920.0000 55.77 KB (57,104 bytes) 12/7/1999 7:00:00 AM Microsoft Corporation c:\winnt\system32\mydocs.dll
browseui.dll 5.00.2920.0000 793.27 KB (812,304 bytes) 12/7/1999 7:00:00 AM Microsoft Corporation c:\winnt\system32\browseui.dll
shdocvw.dll 5.00.2920.0000 1.05 MB (1,104,144 bytes) 12/7/1999 7:00:00 AM Microsoft Corporation c:\winnt\system32\shdocvw.dll
explorer.exe 5.00.2920.0000 232.77 KB (238,352 bytes) 12/7/1999 7:00:00 AM Microsoft Corporation c:\winnt\explorer.exe
dfssvc.exe 5.00.2191.1 85.27 KB (87,312 bytes) 12/7/1999 7:00:00 AM Microsoft Corporation c:\winnt\system32\dfssvc.exe
iislog.dll 5.00.0984 76.27 KB (78,096 bytes) 2/5/2001 10:44:54 AM Microsoft Corporation c:\winnt\system32\inetsrv\iislog.dll
httpext.dll 0.9.3939.9 418.27 KB (428,304 bytes) 2/5/2001 10:44:54 AM Microsoft Corporation c:\winnt\system32\inetsrv\httpext.dll
rpcproxy.dll 5.00.2176.1 16.27 KB (16,656 bytes) 2/5/2001 10:44:12 AM Microsoft Corporation c:\winnt\system32\rpcproxy\rpcproxy.dll
fpexedll.dll 4.0.2.3406 20.06 KB (20,541 bytes) 2/5/2001 10:46:46 AM Microsoft Corporation c:\program files\common files\microsoft shared\web server extensions\40\bin\fpexedll.dll
md5filt.dll 5.00.0984 32.77 KB (33,552 bytes) 2/5/2001 10:44:59 AM Microsoft Corporation c:\winnt\system32\inetsrv\md5filt.dll
gzip.dll 5.00.0984 30.27 KB (30,992 bytes) 2/5/2001 10:44:58 AM Microsoft Corporation c:\winnt\system32\inetsrv\gzip.dll
compfilt.dll 5.00.0984 22.27 KB (22,800 bytes) 2/5/2001 10:44:58 AM Microsoft Corporation c:\winnt\system32\inetsrv\compfilt.dll
sspifilt.dll 5.00.0984 43.27 KB (44,304 bytes) 2/5/2001 10:44:59 AM Microsoft Corporation c:\winnt\system32\inetsrv\sspifilt.dll
iscomlog.dll 5.00.0984 24.77 KB (25,360 bytes) 2/5/2001 10:44:54 AM Microsoft Corporation c:\winnt\system32\inetsrv\iscomlog.dll
lonsint.dll 5.00.0984 11.77 KB (12,048 bytes) 2/5/2001 10:44:54 AM Microsoft Corporation c:\winnt\system32\inetsrv\lonsint.dll

inetsloc.dll 5.00.0984 20.27 KB (20,752 bytes) 2/5/2001 10:44:55 AM Microsoft Corporation c:\winnt\system32\inetsloc.dll
iisfecnv.dll 5.00.0984 7.27 KB (7,440 bytes) 2/5/2001 10:44:54 AM Microsoft Corporation c:\winnt\system32\inetsrv\iisfecnv.dll
isatq.dll 5.00.0984 61.27 KB (62,736 bytes) 2/5/2001 10:44:56 AM Microsoft Corporation c:\winnt\system32\inetsrv\isatq.dll
infocomm.dll 5.00.0984 234.27 KB (239,888 bytes) 2/5/2001 10:44:54 AM Microsoft Corporation c:\winnt\system32\inetsrv\infocomm.dll
w3svc.dll 5.00.0984 347.27 KB (355,600 bytes) 2/5/2001 10:45:00 AM Microsoft Corporation c:\winnt\system32\inetsrv\w3svc.dll
security.dll 5.00.2154.1 5.77 KB (5,904 bytes) 12/7/1999 7:00:00 AM Microsoft Corporation c:\winnt\system32\security.dll
svcext.dll 5.00.0984 39.77 KB (40,720 bytes) 2/5/2001 10:44:55 AM Microsoft Corporation c:\winnt\system32\inetsrv\svcext.dll
admexs.dll 5.00.0984 27.77 KB (28,432 bytes) 2/5/2001 10:44:53 AM Microsoft Corporation c:\winnt\system32\inetsrv\admexs.dll
wamreg.dll 5.00.0984 46.27 KB (47,376 bytes) 2/5/2001 10:45:00 AM Microsoft Corporation c:\winnt\system32\inetsrv\wamreg.dll
metadata.dll 5.00.0984 70.77 KB (72,464 bytes) 2/5/2001 10:44:54 AM Microsoft Corporation c:\winnt\system32\inetsrv\metadata.dll
iismap.dll 5.00.0984 56.27 KB (57,616 bytes) 2/5/2001 10:44:55 AM Microsoft Corporation c:\winnt\system32\iismap.dll
nsepm.dll 5.00.0984 43.27 KB (44,304 bytes) 2/5/2001 10:44:54 AM Microsoft Corporation c:\winnt\system32\inetsrv\nsepm.dll
coadmin.dll 5.00.0984 39.77 KB (40,720 bytes) 2/5/2001 10:44:56 AM Microsoft Corporation c:\winnt\system32\inetsrv\coadmin.dll
iisadmin.dll 5.00.0984 14.77 KB (15,120 bytes) 2/5/2001 10:44:54 AM Microsoft Corporation c:\winnt\system32\inetsrv\iisadmin.dll
rpcref.dll 5.00.0984 4.27 KB (4,368 bytes) 2/5/2001 10:44:55 AM Microsoft Corporation c:\winnt\system32\inetsrv\rpcref.dll
iisrtl.dll 5.00.0984 120.77 KB (123,664 bytes) 2/5/2001 10:44:55 AM Microsoft Corporation c:\winnt\system32\iisrtl.dll
inetinfo.exe 5.00.0984 14.27 KB (14,608 bytes) 2/5/2001 10:44:54 AM Microsoft Corporation c:\winnt\system32\inetsrv\inetinfo.exe
netui1.dll 5.00.2134.1 210.27 KB (215,312 bytes) 12/7/1999 7:00:00 AM Microsoft Corporation c:\winnt\system32\netui1.dll
netui0.dll 5.00.2134.1 70.27 KB (71,952 bytes) 12/7/1999 7:00:00 AM Microsoft Corporation c:\winnt\system32\netui0.dll
ntlanman.dll 5.00.2157.1 35.27 KB (36,112 bytes) 12/7/1999 7:00:00 AM Microsoft Corporation c:\winnt\system32\ntlanman.dll
perfos.dll 5.00.2155.1 21.27 KB (21,776 bytes) 12/7/1999 7:00:00 AM Microsoft Corporation c:\winnt\system32\perfos.dll
psapi.dll 5.00.2134.1 28.27 KB (28,944 bytes) 12/7/1999 7:00:00 AM Microsoft Corporation c:\winnt\system32\psapi.dll
wshnetbs.dll 5.00.2134.1 7.77 KB (7,952 bytes) 12/7/1999 7:00:00 AM Microsoft Corporation c:\winnt\system32\wshnetbs.dll
rapilib.dll 5.00.2167.1 25.27 KB (25,872 bytes) 12/7/1999 7:00:00 AM Microsoft Corporation c:\winnt\system32\rapilib.dll
rsvpsp.dll 5.00.2167.1 74.77 KB (76,560 bytes) 12/7/1999 7:00:00 AM Microsoft Corporation c:\winnt\system32\rsvpsp.dll
ntmarta.dll 5.00.2158.1 98.77 KB (101,136 bytes) 12/7/1999 7:00:00 AM Microsoft Corporation c:\winnt\system32\ntmarta.dll
provthrd.dll 1.50.1085.0000 68.07 KB (69,708 bytes) 2/5/2001 3:49:14 PM Microsoft Corporation c:\winnt\system32\wbem\provthrd.dll
ntevt.dll 1.50.1085.0000 192.06 KB (196,669 bytes) 12/7/1999 7:00:00 AM Microsoft Corporation c:\winnt\system32\wbem\ntevt.dll
framedyn.dll 1.50.1085.0000 164.05 KB (167,992 bytes) 12/7/1999 7:00:00 AM Microsoft Corporation c:\winnt\system32\wbem\framedyn.dll
cimwin32.dll 1.50.1085.0000 1.03 MB (1,077,306 bytes) 12/7/1999 7:00:00 AM Microsoft Corporation c:\winnt\system32\wbem\cimwin32.dll
wbemsvc.dll 1.50.1085.0000 140.07 KB (143,430 bytes) 12/7/1999 7:00:00 AM Microsoft Corporation c:\winnt\system32\wbem\wbemsvc.dll
wbemess.dll 1.50.1085.0001 352.05 KB (360,503 bytes) 12/7/1999 7:00:00 AM Microsoft Corporation c:\winnt\system32\wbem\wbemess.dll
fastprox.dll 1.50.1085.0001 144.08 KB (147,534 bytes) 12/7/1999 7:00:00 AM Microsoft Corporation c:\winnt\system32\wbem\fastprox.dll
wbemcore.dll 1.50.1085.0001 632.05 KB (647,224 bytes) 12/7/1999 7:00:00 AM Microsoft Corporation c:\winnt\system32\wbem\wbemcore.dll
wbemcomn.dll 1.50.1085.0001 684.05 KB (700,472 bytes) 12/7/1999 7:00:00 AM Microsoft Corporation c:\winnt\system32\wbem\wbemcomn.dll
winmgmt.exe 1.50.1085.0001 188.05 KB (192,567 bytes) 12/7/1999 7:00:00 AM Microsoft Corporation c:\winnt\system32\wbem\winmgmt.exe
simptcp.dll 5.00.2134.1 19.27 KB (19,728 bytes) 2/5/2001 10:44:12 AM Microsoft Corporation c:\winnt\system32\simptcp.dll
tcpsvcs.exe 5.00.2134.1 24.77 KB (25,360 bytes) 12/7/1999 7:00:00 AM Microsoft Corporation c:\winnt\system32\tcpsvcs.exe
msidle.dll 5.00.2920.0000 6.27 KB (6,416 bytes) 12/7/1999 7:00:00 AM Microsoft Corporation c:\winnt\system32\msidle.dll
mstask.exe 4.71.2137.1 115.27 KB (118,032 bytes) 2/5/2001 3:49:15 PM Microsoft Corporation c:\winnt\system32\mstask.exe
traffic.dll 5.00.2139.1 30.77 KB (31,504 bytes) 12/7/1999 7:00:00 AM Microsoft Corporation c:\winnt\system32\traffic.dll
rsvp.exe 5.00.2167.1 172.77 KB (176,912 bytes) 12/7/1999 7:00:00 AM Microsoft Corporation c:\winnt\system32\rsvp.exe
regsvc.exe 5.00.2155.1 65.27 KB (66,832 bytes) 12/7/1999 7:00:00 AM Microsoft Corporation c:\winnt\system32\regsvc.exe
llsrpc.dll 5.00.2149.1 45.77 KB (46,864 bytes) 12/7/1999 7:00:00 AM Microsoft Corporation c:\winnt\system32\llsrpc.dll
llssrv.exe 5.00.2167.1 114.27 KB (117,008 bytes) 12/7/1999 7:00:00 AM Microsoft Corporation c:\winnt\system32\llssrv.exe

ntmsdba.dll 5.00.2187.1 167.77 KB (171,792 bytes) 12/7/1999 7:00:00 AM Microsoft Corporation c:\winnt\system32\ntmsdba.dll
rasdlg.dll 5.00.2194.1 514.27 KB (526,608 bytes) 12/7/1999 7:00:00 AM Microsoft Corporation c:\winnt\system32\rasdlg.dll
netcfgx.dll 5.00.2175.1 533.77 KB (546,576 bytes) 12/7/1999 7:00:00 AM Microsoft Corporation c:\winnt\system32\netcfgx.dll
rasmans.dll 5.00.2188.1 146.77 KB (150,288 bytes) 12/7/1999 7:00:00 AM Microsoft Corporation c:\winnt\system32\rasmans.dll
netshell.dll 5.00.2176.1 456.77 KB (467,728 bytes) 12/7/1999 7:00:00 AM Microsoft Corporation c:\winnt\system32\netshell.dll
netman.dll 5.00.2175.1 88.77 KB (90,896 bytes) 12/7/1999 7:00:00 AM Microsoft Corporation c:\winnt\system32\netman.dll
iashlpr.dll 5.00.2184.1 33.27 KB (34,064 bytes) 12/7/1999 7:00:00 AM Microsoft Corporation c:\winnt\system32\iashlpr.dll
iasacct.dll 5.00.2134.1 28.27 KB (28,944 bytes) 12/7/1999 7:00:00 AM Microsoft Corporation c:\winnt\system32\iasacct.dll
iasuserr.dll 5.00.2134.1 25.77 KB (26,384 bytes) 12/7/1999 7:00:00 AM Microsoft Corporation c:\winnt\system32\iasuserr.dll
iasnap.dll 5.00.2134.1 58.77 KB (60,176 bytes) 12/7/1999 7:00:00 AM Microsoft Corporation c:\winnt\system32\iasnap.dll
iaspipe.dll 5.00.2134.1 41.77 KB (42,768 bytes) 12/7/1999 7:00:00 AM Microsoft Corporation c:\winnt\system32\iaspipe.dll
expsrv.dll 6.0.8540 370.27 KB (379,152 bytes) 12/7/1999 7:00:00 AM Microsoft Corporation c:\winnt\system32\expsrv.dll
vbajet32.dll 6.1.8268 30.27 KB (30,992 bytes) 12/7/1999 7:00:00 AM Microsoft Corporation c:\winnt\system32\vbajet32.dll
msjtes40.dll 4.00.2927.8 232.27 KB (237,840 bytes) 12/7/1999 7:00:00 AM Microsoft Corporation c:\winnt\system32\msjtes40.dll
oledb32r.dll 2.60.6526.0 68.27 KB (69,904 bytes) 2/5/2001 5:04:24 PM Microsoft Corporation c:\program files\common files\system\ole db\oledb32r.dll
comdlg32.dll 5.00.2920.0000 236.77 KB (242,448 bytes) 12/7/1999 7:00:00 AM Microsoft Corporation c:\winnt\system32\comdlg32.dll
msdart.dll 2.60.6526.0 144.27 KB (147,728 bytes) 2/5/2001 5:04:22 PM Microsoft Corporation c:\winnt\system32\msdart.dll
oledb32.dll 2.60.6526.0 448.27 KB (459,024 bytes) 2/5/2001 5:04:24 PM Microsoft Corporation c:\program files\common files\system\ole db\oledb32.dll
msjint40.dll 4.00.2927.2 148.27 KB (151,824 bytes) 12/7/1999 7:00:00 AM Microsoft Corporation c:\winnt\system32\msjint40.dll
msjter40.dll 4.00.2927.2 52.27 KB (53,520 bytes) 12/7/1999 7:00:00 AM Microsoft Corporation c:\winnt\system32\msjter40.dll
mswstr10.dll 4.00.2927.10 600.27 KB (614,672 bytes) 12/7/1999 7:00:00 AM Microsoft Corporation c:\winnt\system32\mswstr10.dll
msjet40.dll 4.00.2927.4 1.43 MB (1,495,312 bytes) 12/7/1999 7:00:00 AM Microsoft Corporation c:\winnt\system32\msjet40.dll
msjetoledb40.dll 4.00.2927.2 340.27 KB (348,432 bytes) 12/7/1999 7:00:00 AM Microsoft Corporation c:\winnt\system32\msjetoledb40.dll
iasrad.dll 5.00.2139.1 94.27 KB (96,528 bytes) 12/7/1999 7:00:00 AM Microsoft Corporation c:\winnt\system32\iasrad.dll
iassam.dll 5.00.2160.1 96.27 KB (98,576 bytes) 12/7/1999 7:00:00 AM Microsoft Corporation c:\winnt\system32\iassam.dll
iasads.dll 5.00.2134.1 73.77 KB (75,536 bytes) 12/7/1999 7:00:00 AM Microsoft Corporation c:\winnt\system32\iasads.dll
sens.dll 5.00.2163.1 36.77 KB (37,648 bytes) 12/7/1999 7:00:00 AM Microsoft Corporation c:\winnt\system32\sens.dll
iaspolcy.dll 5.00.2134.1 25.27 KB (25,872 bytes) 12/7/1999 7:00:00 AM Microsoft Corporation c:\winnt\system32\iaspolcy.dll
iassvcs.dll 5.00.2160.1 58.77 KB (60,176 bytes) 12/7/1999 7:00:00 AM Microsoft Corporation c:\winnt\system32\iassvcs.dll
iassdo.dll 5.00.2157.1 262.27 KB (268,560 bytes) 12/7/1999 7:00:00 AM Microsoft Corporation c:\winnt\system32\iassdo.dll
ntmssvc.dll 5.00.2187.1 390.77 KB (400,144 bytes) 12/7/1999 7:00:00 AM Microsoft Corporation c:\winnt\system32\ntmssvc.dll
ias.dll 5.00.2134.1 7.27 KB (7,440 bytes) 12/7/1999 7:00:00 AM Microsoft Corporation c:\winnt\system32\ias.dll
es.dll 1999.9.3422.21 231.77 KB (237,328 bytes) 12/7/1999 7:00:00 AM Microsoft Corporation c:\winnt\system32\es.dll
mtxoci.dll 1999.9.3421.3 109.27 KB (111,888 bytes) 2/5/2001 10:44:18 AM Microsoft Corporation c:\winnt\system32\mtxoci.dll
resutils.dll 5.00.2191.1 39.77 KB (40,720 bytes) 12/7/1999 7:00:00 AM Microsoft Corporation c:\winnt\system32\resutils.dll
clusapi.dll 5.00.2179.1 50.27 KB (51,472 bytes) 12/7/1999 7:00:00 AM Microsoft Corporation c:\winnt\system32\clusapi.dll
msvcp50.dll 5.00.7051 552.50 KB (565,760 bytes) 12/7/1999 7:00:00 AM Microsoft Corporation c:\winnt\system32\msvcp50.dll
xolehlp.dll 1999.9.3421.3 17.27 KB (17,680 bytes) 2/5/2001 10:44:17 AM Microsoft Corporation c:\winnt\system32\xolehlp.dll
msdtclog.dll 1999.9.3421.3 89.77 KB (91,920 bytes) 2/5/2001 10:44:17 AM Microsoft Corporation c:\winnt\system32\msdtclog.dll
mtxclu.dll 1999.9.3421.3 50.27 KB (51,472 bytes) 12/7/1999 7:00:00 AM Microsoft Corporation c:\winnt\system32\mtxclu.dll
msdtcprx.dll 1999.9.3422.10 619.27 KB (634,128 bytes) 2/5/2001 10:44:18 AM Microsoft Corporation c:\winnt\system32\msdtcprx.dll
txfaux.dll 1999.9.3422.24 341.27 KB (349,456 bytes) 2/5/2001 10:44:17 AM Microsoft Corporation c:\winnt\system32\txfaux.dll
msdtctm.dll 1999.9.3422.12 1.02 MB (1,070,864 bytes) 2/5/2001 10:44:18 AM Microsoft Corporation c:\winnt\system32\msdtctm.dll
msdtc.exe 1999.9.3421.3 6.77 KB (6,928 bytes) 2/5/2001 10:44:17 AM Microsoft Corporation c:\winnt\system32\msdtc.exe

wmi.dll 5.00.2191.1 6.27 KB (6,416 bytes) 12/7/1999 7:00:00 AM Microsoft Corporation c:\winnt\system32\wmi.dll
admwprox.dll 5.00.0984 31.77 KB (32,528 bytes) 2/5/2001 10:44:55 AM Microsoft Corporation c:\winnt\system32\admwprox.dll
inetpp.dll 5.00.2161.1 63.27 KB (64,784 bytes) 12/7/1999 7:00:00 AM Microsoft Corporation c:\winnt\system32\inetpp.dll
win32spl.dll 5.00.2162.1 92.27 KB (94,480 bytes) 12/7/1999 7:00:00 AM Microsoft Corporation c:\winnt\system32\win32spl.dll
usbmon.dll 5.00.2165.1 11.27 KB (11,536 bytes) 12/7/1999 7:00:00 AM Microsoft Corporation c:\winnt\system32\usbmon.dll
tcpmon.dll 5.00.2165.1 40.77 KB (41,744 bytes) 12/7/1999 7:00:00 AM Microsoft Corporation c:\winnt\system32\tcpmon.dll
pjlmon.dll 5.00.2165.1 12.77 KB (13,072 bytes) 11/30/1999 6:39:36 PM Microsoft Corporation c:\winnt\system32\pjlmon.dll
cnbjmon.dll 5.00.2134.1 43.77 KB (44,816 bytes) 11/30/1999 6:38:48 PM Microsoft Corporation c:\winnt\system32\cnbjmon.dll
localspl.dll 5.00.2191.1 244.77 KB (250,640 bytes) 12/7/1999 7:00:00 AM Microsoft Corporation c:\winnt\system32\localspl.dll
spoolss.dll 5.00.2161.1 61.77 KB (63,248 bytes) 2/5/2001 9:57:16 AM Microsoft Corporation c:\winnt\system32\spoolss.dll
spoolsv.exe 5.00.2161.1 43.77 KB (44,816 bytes) 2/5/2001 9:57:15 AM Microsoft Corporation c:\winnt\system32\spoolsv.exe
rpcss.dll 5.00.2181.1 229.27 KB (234,768 bytes) 12/7/1999 7:00:00 AM Microsoft Corporation c:\winnt\system32\rpcss.dll
svchost.exe 5.00.2134.1 7.77 KB (7,952 bytes) 12/7/1999 7:00:00 AM Microsoft Corporation c:\winnt\system32\svchost.exe
dssbase.dll 5.00.2150.1 140.77 KB (144,144 bytes) 12/7/1999 7:00:00 AM Microsoft Corporation c:\winnt\system32\dssbase.dll
oakley.dll 5.00.2174.1 420.27 KB (430,352 bytes) 12/7/1999 7:00:00 AM Microsoft Corporation c:\winnt\system32\oakley.dll
mfc42u.dll 6.00.8665.0 972.05 KB (995,384 bytes) 12/7/1999 7:00:00 AM Microsoft Corporation c:\winnt\system32\mfc42u.dll
polagent.dll 5.00.2183.1 108.27 KB (110,864 bytes) 12/7/1999 7:00:00 AM Microsoft Corporation c:\winnt\system32\polagent.dll
scecli.dll 5.00.2191.1 105.27 KB (107,792 bytes) 12/7/1999 7:00:00 AM Microsoft Corporation c:\winnt\system32\scecli.dll
atl.dll 3.00.8449 57.56 KB (58,938 bytes) 12/7/1999 7:00:00 AM Microsoft Corporation c:\winnt\system32\atl.dll
certcli.dll 5.00.2175.1 132.27 KB (135,440 bytes) 12/7/1999 7:00:00 AM Microsoft Corporation c:\winnt\system32\certcli.dll
esent.dll 6.0.3939.6 1.07 MB (1,120,016 bytes) 12/7/1999 7:00:00 AM Microsoft Corporation c:\winnt\system32\esent.dll
ntdsatq.dll 5.00.2181.1 31.27 KB (32,016 bytes) 12/7/1999 7:00:00 AM Microsoft Corporation c:\winnt\system32\ntdsatq.dll
ntdsa.dll 5.00.2195.1 993.27 KB (1,017,104 bytes) 12/7/1999 7:00:00 AM Microsoft Corporation c:\winnt\system32\ntdsa.dll
kdcsvc.dll 5.00.2181.1 133.77 KB (136,976 bytes) 12/7/1999 7:00:00 AM Microsoft Corporation c:\winnt\system32\kdcsvc.dll
sfmapi.dll 5.00.2134.1 38.77 KB (39,696 bytes) 12/7/1999 7:00:00 AM Microsoft Corporation c:\winnt\system32\sfmapi.dll
rassfm.dll 5.00.2168.1 21.27 KB (21,776 bytes) 12/7/1999 7:00:00 AM Microsoft Corporation c:\winnt\system32\rassfm.dll
mpr.dll 5.00.2146.1 53.27 KB (54,544 bytes) 12/7/1999 7:00:00 AM Microsoft Corporation c:\winnt\system32\mpr.dll
schannel.dll 5.00.2170.1 139.77 KB (143,120 bytes) 12/7/1999 7:00:00 AM Microsoft Corporation c:\winnt\system32\schannel.dll
netlogon.dll 5.00.2182.1 347.77 KB (356,112 bytes) 12/7/1999 7:00:00 AM Microsoft Corporation c:\winnt\system32\netlogon.dll
kerberos.dll 5.00.2181.1 196.77 KB (201,488 bytes) 12/7/1999 7:00:00 AM Microsoft Corporation c:\winnt\system32\kerberos.dll
msprivs.dll 5.00.2154.1 41.50 KB (42,496 bytes) 12/7/1999 7:00:00 AM Microsoft Corporation c:\winnt\system32\msprivs.dll
samsrv.dll 5.00.2192.1 357.77 KB (366,352 bytes) 12/7/1999 7:00:00 AM Microsoft Corporation c:\winnt\system32\samsrv.dll
lsasrv.dll 5.00.2184.1 487.77 KB (499,472 bytes) 12/7/1999 7:00:00 AM Microsoft Corporation c:\winnt\system32\lsasrv.dll
lsass.exe 5.00.2184.1 32.77 KB (33,552 bytes) 12/7/1999 7:00:00 AM Microsoft Corporation c:\winnt\system32\lsass.exe
ntlsapi.dll 5.00.2134.1 6.77 KB (6,928 bytes) 12/7/1999 7:00:00 AM Microsoft Corporation c:\winnt\system32\ntlsapi.dll
wmicore.dll 5.00.2178.1 70.77 KB (72,464 bytes) 12/7/1999 7:00:00 AM Microsoft Corporation c:\winnt\system32\wmicore.dll
rasadhlp.dll 5.00.2168.1 7.27 KB (7,440 bytes) 12/7/1999 7:00:00 AM Microsoft Corporation c:\winnt\system32\rasadhlp.dll
winrnr.dll 5.00.2160.1 18.77 KB (19,216 bytes) 12/7/1999 7:00:00 AM Microsoft Corporation c:\winnt\system32\winrnr.dll
rnr20.dll 5.00.2152.1 35.77 KB (36,624 bytes) 12/7/1999 7:00:00 AM Microsoft Corporation c:\winnt\system32\rnr20.dll
wshtcpip.dll 5.00.2134.1 17.27 KB (17,680 bytes) 12/7/1999 7:00:00 AM Microsoft Corporation c:\winnt\system32\wshtcpip.dll
msafd.dll 5.00.2153.1 54.27 KB (55,568 bytes) 12/7/1999 7:00:00 AM Microsoft Corporation c:\winnt\system32\msafd.dll
mswsock.dll 5.00.2152.1 62.27 KB (63,760 bytes) 12/7/1999 7:00:00 AM Microsoft Corporation c:\winnt\system32\mswsock.dll
xactsrv.dll 5.00.2134.1 90.27 KB (92,432 bytes) 12/7/1999 7:00:00 AM Microsoft Corporation c:\winnt\system32\xactsrv.dll
msgsvc.dll 5.00.2181.1 33.77 KB (34,576 bytes) 12/7/1999 7:00:00 AM Microsoft Corporation c:\winnt\system32\msgsvc.dll

browser.dll 5.00.2142.1 48.27 KB (49,424 bytes) 12/7/1999 7:00:00 AM Microsoft Corporation c:\winnt\system32\browser.dll
alrsvc.dll 5.00.2134.1 17.77 KB (18,192 bytes) 12/7/1999 7:00:00 AM Microsoft Corporation c:\winnt\system32\alrsvc.dll
trkwks.dll 5.00.2166.1 88.77 KB (90,896 bytes) 12/7/1999 7:00:00 AM Microsoft Corporation c:\winnt\system32\trkwks.dll
seclogon.dll 5.00.2135.1 15.77 KB (16,144 bytes) 12/7/1999 7:00:00 AM Microsoft Corporation c:\winnt\system32\seclogon.dll
psbase.dll 5.00.2146.1 111.77 KB (114,448 bytes) 12/7/1999 7:00:00 AM Microsoft Corporation c:\winnt\system32\psbase.dll
cryptsvc.dll 5.00.2181.1 61.77 KB (63,248 bytes) 12/7/1999 7:00:00 AM Microsoft Corporation c:\winnt\system32\cryptsvc.dll
cryptdll.dll 5.00.2135.1 41.27 KB (42,256 bytes) 12/7/1999 7:00:00 AM Microsoft Corporation c:\winnt\system32\cryptdll.dll
wkssvc.dll 5.00.2181.1 95.27 KB (97,552 bytes) 12/7/1999 7:00:00 AM Microsoft Corporation c:\winnt\system32\wkssvc.dll
srvsvc.dll 5.00.2178.1 79.27 KB (81,168 bytes) 12/7/1999 7:00:00 AM Microsoft Corporation c:\winnt\system32\srvsvc.dll
cfgmgr32.dll 5.00.2134.1 16.77 KB (17,168 bytes) 12/7/1999 7:00:00 AM Microsoft Corporation c:\winnt\system32\cfgmgr32.dll
dmserver.dll 2191.1.296.2 11.77 KB (12,048 bytes) 12/7/1999 7:00:00 AM VERITAS Software Corp. c:\winnt\system32\dmserver.dll
winsta.dll 5.00.2134.1 36.27 KB (37,136 bytes) 12/7/1999 7:00:00 AM Microsoft Corporation c:\winnt\system32\winsta.dll
lmhsvc.dll 5.00.2134.1 9.27 KB (9,488 bytes) 12/7/1999 7:00:00 AM Microsoft Corporation c:\winnt\system32\lmhsvc.dll
dnsrslvr.dll 5.00.2181.1 88.27 KB (90,384 bytes) 12/7/1999 7:00:00 AM Microsoft Corporation c:\winnt\system32\dnsrslvr.dll
tapi32.dll 5.00.2182.1 123.27 KB (126,224 bytes) 12/7/1999 7:00:00 AM Microsoft Corporation c:\winnt\system32\tapi32.dll
rasman.dll 5.00.2188.1 54.77 KB (56,080 bytes) 12/7/1999 7:00:00 AM Microsoft Corporation c:\winnt\system32\rasman.dll
rasapi32.dll 5.00.2188.1 189.77 KB (194,320 bytes) 12/7/1999 7:00:00 AM Microsoft Corporation c:\winnt\system32\rasapi32.dll
rtutils.dll 5.00.2168.1 43.77 KB (44,816 bytes) 12/7/1999 7:00:00 AM Microsoft Corporation c:\winnt\system32\rtutils.dll
adsldpc.dll 5.00.2172.1 127.77 KB (130,832 bytes) 12/7/1999 7:00:00 AM Microsoft Corporation c:\winnt\system32\adsldpc.dll
activeds.dll 5.00.2172.1 172.77 KB (176,912 bytes) 12/7/1999 7:00:00 AM Microsoft Corporation c:\winnt\system32\activeds.dll
mprapi.dll 5.00.2181.1 79.27 KB (81,168 bytes) 12/7/1999 7:00:00 AM Microsoft Corporation c:\winnt\system32\mprapi.dll
iphlpapi.dll 5.00.2173.2 67.77 KB (69,392 bytes) 12/7/1999 7:00:00 AM Microsoft Corporation c:\winnt\system32\iphlpapi.dll
icmp.dll 5.00.2134.1 7.27 KB (7,440 bytes) 12/7/1999 7:00:00 AM Microsoft Corporation c:\winnt\system32\icmp.dll
dhcpcsvc.dll 5.00.2153.1 88.77 KB (90,896 bytes) 12/7/1999 7:00:00 AM Microsoft Corporation c:\winnt\system32\dhcpcsvc.dll
eventlog.dll 5.00.2178.1 43.77 KB (44,816 bytes) 12/7/1999 7:00:00 AM Microsoft Corporation c:\winnt\system32\eventlog.dll
ntdsapi.dll 5.00.2160.1 56.27 KB (57,616 bytes) 12/7/1999 7:00:00 AM Microsoft Corporation c:\winnt\system32\ntdsapi.dll
scesrv.dll 5.00.2188.1 225.77 KB (231,184 bytes) 12/7/1999 7:00:00 AM Microsoft Corporation c:\winnt\system32\scesrv.dll
umpnpmgr.dll 5.00.2182.1 86.27 KB (88,336 bytes) 12/7/1999 7:00:00 AM Microsoft Corporation c:\winnt\system32\umpnpmgr.dll
services.exe 5.00.2134.1 86.77 KB (88,848 bytes) 12/7/1999 7:00:00 AM Microsoft Corporation c:\winnt\system32\services.exe
msv1_0.dll 5.00.2164.1 94.77 KB (97,040 bytes) 12/7/1999 7:00:00 AM Microsoft Corporation c:\winnt\system32\msv1_0.dll
clbcatq.dll 1999.9.3422.14 479.27 KB (490,768 bytes) 2/5/2001 10:44:12 AM Microsoft Corporation c:\winnt\system32\clbcatq.dll
oleaut32.dll 2.40.4512 600.27 KB (614,672 bytes) 12/7/1999 7:00:00 AM Microsoft Corporation c:\winnt\system32\oleaut32.dll
cscui.dll 5.00.2172.1 227.27 KB (232,720 bytes) 12/7/1999 7:00:00 AM Microsoft Corporation c:\winnt\system32\cscui.dll
winspool.drv 5.00.2167.1 109.77 KB (112,400 bytes) 12/7/1999 7:00:00 AM Microsoft Corporation c:\winnt\system32\winspool.drv
winscard.dll 5.00.2134.1 77.27 KB (79,120 bytes) 12/7/1999 7:00:00 AM Microsoft Corporation c:\winnt\system32\winscard.dll
wlnotify.dll 5.00.2164.1 53.27 KB (54,544 bytes) 12/7/1999 7:00:00 AM Microsoft Corporation c:\winnt\system32\wlnotify.dll
cscdll.dll 5.00.2189.1 98.27 KB (100,624 bytes) 12/7/1999 7:00:00 AM Microsoft Corporation c:\winnt\system32\cscdll.dll
lz32.dll 5.00.2134.1 9.77 KB (10,000 bytes) 12/7/1999 7:00:00 AM Microsoft Corporation c:\winnt\system32\lz32.dll
version.dll 5.00.2134.1 15.77 KB (16,144 bytes) 12/7/1999 7:00:00 AM Microsoft Corporation c:\winnt\system32\version.dll
rsabase.dll 5.00.2150.1 128.77 KB (131,856 bytes) 12/7/1999 7:00:00 AM Microsoft Corporation c:\winnt\system32\rsabase.dll
mscat32.dll 5.131.2134.1 7.77 KB (7,952 bytes) 12/7/1999 7:00:00 AM Microsoft Corporation c:\winnt\system32\mscat32.dll
ole32.dll 5.00.2181.1 966.27 KB (989,456 bytes) 12/7/1999 7:00:00 AM Microsoft Corporation c:\winnt\system32\ole32.dll
imagehlp.dll 5.00.2195.1 125.27 KB (128,272 bytes) 12/7/1999 7:00:00 AM Microsoft Corporation c:\winnt\system32\imagehlp.dll
msasn1.dll 5.00.2134.1 51.27 KB (52,496 bytes) 12/7/1999 7:00:00 AM Microsoft Corporation c:\winnt\system32\msasn1.dll

crypt32.dll 5.131.2173.1 465.77 KB (476,944 bytes) 12/7/1999 7:00:00 AM Microsoft Corporation c:\winnt\system32\crypt32.dll
wintrust.dll 5.131.2143.1 162.27 KB (166,160 bytes) 12/7/1999 7:00:00 AM Microsoft Corporation c:\winnt\system32\wintrust.dll
setupapi.dll 5.00.2183.1 554.27 KB (567,568 bytes) 12/7/1999 7:00:00 AM Microsoft Corporation c:\winnt\system32\setupapi.dll
winmm.dll 5.00.2161.1 184.77 KB (189,200 bytes) 12/7/1999 7:00:00 AM Microsoft Corporation c:\winnt\system32\winmm.dll
comctl32.dll 5.81 540.27 KB (553,232 bytes) 12/7/1999 7:00:00 AM Microsoft Corporation c:\winnt\system32\comctl32.dll
shlwapi.dll 5.00.2920.0000 282.77 KB (289,552 bytes) 12/7/1999 7:00:00 AM Microsoft Corporation c:\winnt\system32\shlwapi.dll
shell32.dll 5.00.2920.0000 2.24 MB (2,352,400 bytes) 12/7/1999 7:00:00 AM Microsoft Corporation c:\winnt\system32\shell32.dll
msgina.dll 5.00.2191.1 309.77 KB (317,200 bytes) 12/7/1999 7:00:00 AM Microsoft Corporation c:\winnt\system32\msgina.dll
wsock32.dll 5.00.2152.1 21.27 KB (21,776 bytes) 12/7/1999 7:00:00 AM Microsoft Corporation c:\winnt\system32\wsock32.dll
dnsapi.dll 5.00.2181.1 129.77 KB (132,880 bytes) 12/7/1999 7:00:00 AM Microsoft Corporation c:\winnt\system32\dnsapi.dll
wldap32.dll 5.00.2168.1 155.77 KB (159,504 bytes) 12/7/1999 7:00:00 AM Microsoft Corporation c:\winnt\system32\wldap32.dll
ws2help.dll 5.00.2134.1 17.77 KB (18,192 bytes) 12/7/1999 7:00:00 AM Microsoft Corporation c:\winnt\system32\ws2help.dll
ws2_32.dll 5.00.2134.1 69.77 KB (71,440 bytes) 12/7/1999 7:00:00 AM Microsoft Corporation c:\winnt\system32\ws2_32.dll
samlib.dll 5.00.2160.1 46.27 KB (47,376 bytes) 12/7/1999 7:00:00 AM Microsoft Corporation c:\winnt\system32\samlib.dll
netrap.dll 5.00.2134.1 11.27 KB (11,536 bytes) 12/7/1999 7:00:00 AM Microsoft Corporation c:\winnt\system32\netrap.dll
netapi32.dll 5.00.2194.1 302.77 KB (310,032 bytes) 12/7/1999 7:00:00 AM Microsoft Corporation c:\winnt\system32\netapi32.dll
profmap.dll 5.00.2181.1 29.27 KB (29,968 bytes) 12/7/1999 7:00:00 AM Microsoft Corporation c:\winnt\system32\profmap.dll
secur32.dll 5.00.2154.1 46.77 KB (47,888 bytes) 12/7/1999 7:00:00 AM Microsoft Corporation c:\winnt\system32\secur32.dll
sfc.dll 5.00.2164.1 84.27 KB (86,288 bytes) 12/7/1999 7:00:00 AM Microsoft Corporation c:\winnt\system32\sfc.dll
nddeapi.dll 5.00.2137.1 15.27 KB (15,632 bytes) 12/7/1999 7:00:00 AM Microsoft Corporation c:\winnt\system32\nddeapi.dll
userenv.dll 5.00.2185.1 361.27 KB (369,936 bytes) 12/7/1999 7:00:00 AM Microsoft Corporation c:\winnt\system32\userenv.dll
user32.dll 5.00.2180.1 393.27 KB (402,704 bytes) 12/7/1999 7:00:00 AM Microsoft Corporation c:\winnt\system32\user32.dll
gdi32.dll 5.00.2180.1 228.77 KB (234,256 bytes) 12/7/1999 7:00:00 AM Microsoft Corporation c:\winnt\system32\gdi32.dll
rpcrt4.dll 5.00.2193.1 434.27 KB (444,688 bytes) 12/7/1999 7:00:00 AM Microsoft Corporation c:\winnt\system32\rpcrt4.dll
advapi32.dll 5.00.2191.1 349.27 KB (357,648 bytes) 12/7/1999 7:00:00 AM Microsoft Corporation c:\winnt\system32\advapi32.dll
kernel32.dll 5.00.2191.1 715.27 KB (732,432 bytes) 12/7/1999 7:00:00 AM Microsoft Corporation c:\winnt\system32\kernel32.dll
msvcrt.dll 6.10.8637.0 288.09 KB (295,000 bytes) 12/7/1999 7:00:00 AM Microsoft Corporation c:\winnt\system32\msvcrt.dll
winlogon.exe 5.00.2182.1 173.27 KB (177,424 bytes) 12/7/1999 7:00:00 AM Microsoft Corporation c:\winnt\system32\winlogon.exe
sfcfiles.dll 5.00.2195.1 973.27 KB (996,624 bytes) 12/7/1999 7:00:00 AM Microsoft Corporation c:\winnt\system32\sfcfiles.dll
ntdll.dll 5.00.2163.1 469.77 KB (481,040 bytes) 12/7/1999 7:00:00 AM Microsoft Corporation c:\winnt\system32\ntdll.dll
smss.exe 5.00.2170.1 44.27 KB (45,328 bytes) 12/7/1999 7:00:00 AM Microsoft Corporation c:\winnt\system32\smss.exe

[Services]

Display Name Name State Start Mode Service Type Path Error Control Start Name Tag ID
Alerter Alerter Running Auto Share Process c:\winnt\system32\services.exe Normal LocalSystem 0
Application Management AppMgmt Stopped Manual Share Process c:\winnt\system32\services.exe Normal LocalSystem 0
Computer Browser Browser Running Auto Share Process c:\winnt\system32\services.exe Normal LocalSystem 0
Indexing Service cisvc Stopped Manual Share Process c:\winnt\system32\cisvc.exe Normal LocalSystem 0
ClipBook ClipSrv Stopped Manual Own Process c:\winnt\system32\clipsrv.exe Normal LocalSystem 0
Distributed File System Dfs Running Auto Own Process c:\winnt\system32\dfssvc.exe Normal LocalSystem 0
DHCP Client Dhcp Running Auto Share Process c:\winnt\system32\services.exe Normal LocalSystem 0
Logical Disk Manager Administrative Service dmadmin Stopped Manual Share Process c:\winnt\system32\dmadmin.exe /com Normal LocalSystem 0
Logical Disk Manager dmserver Running Auto Share Process c:\winnt\system32\services.exe Normal LocalSystem 0
DNS Client Dnscache Running Auto Share Process c:\winnt\system32\services.exe Normal LocalSystem 0
Event Log Eventlog Running Auto Share Process c:\winnt\system32\services.exe Normal LocalSystem 0
COM+ Event System EventSystem Running Manual Share Process c:\winnt\system32\svchost.exe -k netsvcs Normal LocalSystem 0
Fax Service Fax Stopped Manual Own Process c:\winnt\system32\faxsvc.exe Normal LocalSystem 0
Internet Authentication Service IAS Running Auto Share Process c:\winnt\system32\svchost.exe -k netsvcs Normal LocalSystem 0

IIS Admin Service IISADMIN Running Auto Share Process c:\winnt\system32\inetsrv\inetinfo.exe Normal LocalSystem 0
Intersite Messaging IsmServ Stopped Disabled Own Process c:\winnt\system32\ismserv.exe Normal LocalSystem 0
Kerberos Key Distribution Center kdc Stopped Disabled Share Process c:\winnt\system32\lsass.exe Normal LocalSystem 0
Server lanmanserver Running Auto Share Process c:\winnt\system32\services.exe Normal LocalSystem 0
Workstation lanmanworkstation Running Auto Share Process c:\winnt\system32\services.exe Normal LocalSystem 0
License Logging Service LicenseService Running Auto Own Process c:\winnt\system32\llssrv.exe Normal LocalSystem 0
TCP/IP NetBIOS Helper Service LmHosts Running Auto Share Process c:\winnt\system32\services.exe Normal LocalSystem 0
Messenger Messenger Running Auto Share Process c:\winnt\system32\services.exe Normal LocalSystem 0
NetMeeting Remote Desktop Sharing mnmsrvc Stopped Manual Own Process c:\winnt\system32\mnmsrvc.exe Normal LocalSystem 0
Distributed Transaction Coordinator MSDTC Running Auto Own Process c:\winnt\system32\msdtc.exe Normal LocalSystem 0
Windows Installer MSIServer Stopped Manual Share Process c:\winnt\system32\msiexec.exe /v Normal LocalSystem 0
Network DDE NetDDE Stopped Manual Share Process c:\winnt\system32\netdde.exe Normal LocalSystem 0
Network DDE DSDM NetDDEdsdm Stopped Manual Share Process c:\winnt\system32\netdde.exe Normal LocalSystem 0
Net Logon Netlogon Stopped Manual Share Process c:\winnt\system32\lsass.exe Normal LocalSystem 0
Network Connections Netman Running Manual Share Process c:\winnt\system32\svchost.exe -k netsvcs Normal LocalSystem 0
File Replication NtFrs Stopped Manual Own Process c:\winnt\system32\ntfrs.exe Ignore LocalSystem 0
NT LM Security Support Provider NtLmSsp Stopped Manual Share Process c:\winnt\system32\lsass.exe Normal LocalSystem 0
Removable Storage NtmsSvc Running Auto Share Process c:\winnt\system32\svchost.exe -k netsvcs Normal LocalSystem 0
Plug and Play PlugPlay Running Auto Share Process c:\winnt\system32\services.exe Normal LocalSystem 0
IPSEC Policy Agent PolicyAgent Running Auto Share Process c:\winnt\system32\lsass.exe Normal LocalSystem 0
Protected Storage ProtectedStorage Running Auto Share Process c:\winnt\system32\services.exe Normal LocalSystem 0
Remote Access Auto Connection Manager RasAuto Stopped Manual Share Process c:\winnt\system32\svchost.exe -k netsvcs Normal LocalSystem 0
Remote Access Connection Manager RasMan Stopped Manual Share Process c:\winnt\system32\svchost.exe -k netsvcs Normal LocalSystem 0
Routing and Remote Access RemoteAccess Stopped Disabled Share Process c:\winnt\system32\svchost.exe -k netsvcs Normal LocalSystem 0
Remote Registry Service RemoteRegistry Running Auto Own Process c:\winnt\system32\regsvc.exe Normal LocalSystem 0
Remote Procedure Call (RPC) Locator RpcLocator Stopped Manual Own Process c:\winnt\system32\locator.exe Normal LocalSystem 0
Remote Procedure Call (RPC) RpcSs Running Auto Share Process c:\winnt\system32\svchost -k rpcss Normal LocalSystem 0
QoS Admission Control (RSVP) RSVP Running Auto Own Process c:\winnt\system32\rsvp.exe -s Normal LocalSystem 0
Security Accounts Manager SamSs Running Auto Share Process c:\winnt\system32\lsass.exe Normal LocalSystem 0
Smart Card Helper SCardDrv Stopped Manual Share Process c:\winnt\system32\scardsvr.exe Ignore LocalSystem 0
Smart Card SCardSvr Stopped Manual Share Process c:\winnt\system32\scardsvr.exe Ignore LocalSystem 0
Task Scheduler Schedule Running Auto Share Process c:\winnt\system32\mstask.exe Normal LocalSystem 0
RunAs Service seclogon Running Auto Share Process c:\winnt\system32\services.exe Ignore LocalSystem 0
System Event Notification SENS Running Auto Share Process c:\winnt\system32\svchost.exe -k netsvcs Normal LocalSystem 0
Internet Connection Sharing SharedAccess Stopped Manual Share Process c:\winnt\system32\svchost.exe -k netsvcs Normal LocalSystem 0
Simple TCP/IP Services SimpTcp Running Auto Share Process c:\winnt\system32\tcpsvcs.exe Normal LocalSystem 0
Print Spooler Spooler Running Auto Own Process c:\winnt\system32\spoolsv.exe Normal LocalSystem 0
Performance Logs and Alerts SysmonLog Stopped Manual Own Process c:\winnt\system32\smlogsvc.exe Normal LocalSystem 0
Telephony TapiSrv Running Manual Share Process c:\winnt\system32\svchost.exe -k tapisrv Normal LocalSystem 0
Terminal Services TermService Stopped Disabled Own Process c:\winnt\system32\termsrv.exe Normal LocalSystem 0
Telnet TlntSvr Stopped Manual Own Process c:\winnt\system32\tlntsvr.exe Normal LocalSystem 0
Distributed Link Tracking Server TrkSvr Stopped Manual Share Process c:\winnt\system32\services.exe Normal LocalSystem 0
Distributed Link Tracking Client TrkWks Running Auto Share Process c:\winnt\system32\services.exe Normal LocalSystem 0
Uninterruptible Power Supply UPS Stopped Manual Own Process c:\winnt\system32\ups.exe Normal LocalSystem 0
Utility Manager UtilMan Stopped Manual Own Process c:\winnt\system32\utilman.exe Normal LocalSystem 0
Windows Time W32Time Stopped Manual Share Process c:\winnt\system32\services.exe Normal LocalSystem 0
World Wide Web Publishing Service W3SVC Running Auto Share Process c:\winnt\system32\inetsrv\inetinfo.exe Normal LocalSystem 0
Windows Management Instrumentation WinMgmt Running Auto Own Process c:\winnt\system32\wbem\winmgmt.exe Ignore LocalSystem 0
Windows Management Instrumentation Driver Extensions Wmi Running Manual Share Process c:\winnt\system32\services.exe Normal LocalSystem 0

[Program Groups]

Group Name Name User Name
Accessories Default User:Accessories Default User
Accessories\Accessibility Default
User:Accessories\Accessibility Default User
Accessories\Entertainment Default
User:Accessories\Entertainment Default User
Accessories\System Tools Default User:Accessories\System
Tools Default User
Startup Default User:Startup Default User
Accessories All Users:Accessories All Users
Accessories\Accessibility All Users:Accessories\Accessibility
All Users
Accessories\Communications All
Users:Accessories\Communications All Users
Accessories\Entertainment All Users:Accessories\Entertainment
All Users
Accessories\Games All Users:Accessories\Games All Users
Accessories\Microsoft Script Debugger All
Users:Accessories\Microsoft Script Debugger All Users
Accessories\System Tools All Users:Accessories\System Tools
All Users
Administrative Tools All Users:Administrative Tools All Users
Microsoft SQL Server All Users:Microsoft SQL Server All Users
Startup All Users:Startup All Users
Accessories CLIENT10\Administrator:Accessories
CLIENT10\Administrator
Accessories\Accessibility
CLIENT10\Administrator:Accessories\Accessibility
CLIENT10\Administrator
Accessories\Entertainment
CLIENT10\Administrator:Accessories\Entertainment
CLIENT10\Administrator
Accessories\System Tools
CLIENT10\Administrator:Accessories\System Tools
CLIENT10\Administrator
Administrative Tools CLIENT10\Administrator:Administrative Tools
CLIENT10\Administrator
Startup CLIENT10\Administrator:Startup
CLIENT10\Administrator

[Startup Programs]

Program Command User Name Location
Promon.exe promon.exe All Users
HKLM\SOFTWARE\Microsoft\Windows\CurrentVersion\Run

[OLE Registration]

Object Local Server
Sound (OLE2) sndrec32.exe
Media Clip mplay32.exe
Video Clip mplay32.exe /avi
MIDI Sequence mplay32.exe /mid
Sound Not Available
Media Clip Not Available
Image Document "C:\Program Files\Windows
NT\Accessories\ImageVue\KodakImg.exe"
WordPad Document "%ProgramFiles%\Windows
NT\Accessories\WORDPAD.EXE"
Windows Media Services DRM Storage object Not Available
Bitmap Image mspaint.exe

[Internet Explorer 5]

[Following are sub-categories of this main category]

[Summary]

Item Value
Version 5.00.2920.0000
Build 52920
Product ID 51876-OEM-0000007-00000
Application Path C:\Program Files\Internet Explorer
Language English (United States)
Active Printer Not Available

Cipher Strength 56-bit
Content Advisor Disabled
IEAK Install No

[File Versions]

File Version Size Date Path Company
advapi32.dll 5.0.2191.1 349 KB 12/7/1999 7:00:00 AM
C:\WINNT\system32 Microsoft Corporation
advpack.dll 5.0.2920.0 87 KB 12/7/1999 7:00:00 AM
C:\WINNT\system32 Microsoft Corporation
browselc.dll 5.0.2920.0 35 KB 12/7/1999 7:00:00 AM
C:\WINNT\system32 Microsoft Corporation
browseui.dll 5.0.2920.0 793 KB 12/7/1999 7:00:00 AM
C:\WINNT\system32 Microsoft Corporation
ckcnv.exe 5.0.2189.1 9 KB 12/7/1999 7:00:00 AM
C:\WINNT\system32 Microsoft Corporation
comctl32.dll 5.81.2920.0 540 KB 12/7/1999
7:00:00 AM C:\WINNT\system32 Microsoft Corporation
crypt32.dll 5.131.2173.1 466 KB 12/7/1999 7:00:00 AM
C:\WINNT\system32 Microsoft Corporation
enhsig.dll <File Missing> Not Available Not Available
Not Available Not Available
iemigrat.dll <File Missing> Not Available Not
Available Not Available Not Available
iesetup.dll 5.0.2920.0 57 KB 12/7/1999 7:00:00 AM
C:\WINNT\system32 Microsoft Corporation
iexplore.exe 5.0.2920.0 59 KB 12/7/1999 7:00:00 AM
C:\Program Files\Internet Explorer Microsoft Corporation
imagehlp.dll 5.0.2195.1 125 KB 12/7/1999 7:00:00 AM
C:\WINNT\system32 Microsoft Corporation
imghelp.dll <File Missing> Not Available Not
Available Not Available Not Available
inseng.dll 5.0.2920.0 72 KB 12/7/1999 7:00:00 AM
C:\WINNT\system32 Microsoft Corporation
jobexec.dll 5.0.0.1 47 KB 12/7/1999 7:00:00 AM
C:\WINNT\system32 Microsoft Corporation
jscript.dll 5.1.0.4615 476 KB 12/7/1999 7:00:00 AM
C:\WINNT\system32 Microsoft Corporation
jsproxy.dll 5.0.2920.0 13 KB 12/7/1999 7:00:00 AM
C:\WINNT\system32 Microsoft Corporation
msaahtml.dll <File Missing> Not Available Not
Available Not Available Not Available
mshtml.dll 5.0.2920.0 2302 KB 12/7/1999 7:00:00 AM
C:\WINNT\system32 Microsoft Corporation
msjava.dll 5.0.3234.0 918 KB 12/7/1999 7:00:00 AM
C:\WINNT\system32 Microsoft Corporation
msoss.dll <File Missing> Not Available Not Available
Not Available Not Available
msxml.dll 5.0.2920.0 521 KB 12/7/1999 7:00:00 AM
C:\WINNT\system32 Microsoft Corporation
occache.dll 5.0.2920.0 86 KB 12/7/1999 7:00:00 AM
C:\WINNT\system32 Microsoft Corporation
ole32.dll 5.0.2181.1 966 KB 12/7/1999 7:00:00 AM
C:\WINNT\system32 Microsoft Corporation
oleaut32.dll 2.40.4512.1 600 KB 12/7/1999
7:00:00 AM C:\WINNT\system32 Microsoft Corporation
olepro32.dll 5.0.4512.1 160 KB 12/7/1999 7:00:00 AM
C:\WINNT\system32 Microsoft Corporation

rsabase.dll 5.0.2150.1 129 KB 12/7/1999 7:00:00 AM C:\WINNT\system32 Microsoft Corporation
rsaenh.dll <File Missing> Not Available Not Available Not Available Not Available
rsapi32.dll <File Missing> Not Available Not Available Not Available Not Available
rsasig.dll <File Missing> Not Available Not Available Not Available Not Available
schannel.dll 5.0.2170.0 140 KB 12/7/1999 7:00:00 AM C:\WINNT\system32 Microsoft Corporation
shdoc401.dll <File Missing> Not Available Not Available Not Available Not Available
shdocvw.dll 5.0.2920.0 1078 KB 12/7/1999 7:00:00 AM C:\WINNT\system32 Microsoft Corporation
shell32.dll 5.0.2920.0 2297 KB 12/7/1999 7:00:00 AM C:\WINNT\system32 Microsoft Corporation
shlwapi.dll 5.0.2920.0 283 KB 12/7/1999 7:00:00 AM C:\WINNT\system32 Microsoft Corporation
url.dll 5.0.2920.0 82 KB 12/7/1999 7:00:00 AM C:\WINNT\system32 Microsoft Corporation
urlmon.dll 5.0.2920.0 427 KB 12/7/1999 7:00:00 AM C:\WINNT\system32 Microsoft Corporation
vbscript.dll 5.1.0.4615 428 KB 12/7/1999 7:00:00 AM C:\WINNT\system32 Microsoft Corporation
webcheck.dll 5.0.2920.0 252 KB 12/7/1999 7:00:00 AM C:\WINNT\system32 Microsoft Corporation
win.com 5.0.2134.1 24 KB 12/7/1999 7:00:00 AM C:\WINNT\system32 Microsoft Corporation
wininet.dll 5.0.2920.0 457 KB 12/7/1999 7:00:00 AM C:\WINNT\system32 Microsoft Corporation
winsock.dll 3.10.0.103 3 KB 12/7/1999 7:00:00 AM C:\WINNT\system32 Microsoft Corporation
wintrust.dll 5.131.2143.1 162 KB 12/7/1999 7:00:00 AM C:\WINNT\system32 Microsoft Corporation
wsock.vxd <File Missing> Not Available Not Available Not Available Not Available
wsock32.dll 5.0.2152.1 21 KB 12/7/1999 7:00:00 AM C:\WINNT\system32 Microsoft Corporation
wsock32n.dll <File Missing> Not Available Not Available Not Available Not Available

[Connectivity]

Item Value
Connection Preference Never dial
EnableHttp1.1 1
ProxyHttp1.1 0

LAN Settings

AutoConfigProxy wininet.dll
AutoProxyDetectMode Enabled
AutoConfigURL
Proxy Disabled
ProxyServer
ProxyOverride

[Cache]

[Following are sub-categories of this main category]

[Summary]

Item Value
Page Refresh Type Automatic
Temporary Internet Files Folder C:\Documents and Settings\Administrator\Local Settings\Temporary Internet Files
Total Disk Space 17343 MB
Available Disk Space 14794 MB
Maximum Cache Size 541 MB
Available Cache Size 542 MB

[List of Objects]

Program File Status CodeBase
No cached object information available

[Content]

[Following are sub-categories of this main category]

[Summary]

Item Value
Content Advisor Disabled

[Personal Certificates]

Issued To Issued By Validity Signature Algorithm
Administrator Administrator 2/5/2001 to 1/12/2101 sha1RSA

[Other People Certificates]

Issued To Issued By Validity Signature Algorithm
No other people certificate information available

[Publishers]

Name
No publisher information available

[Security]

Zone Security Level
Local intranet Medium-low
Trusted sites Low
Internet Medium
Restricted sites High

RTE Input Parameters

Profile: 9968wh_3clients
File Path: C:\bf_430\9968wh_3clients.PRO
Version: 3

Number of Engines: 112

Name: RTE01A
Description: RTE11_toclient
Directory: c:\rtelogs\RTE01A.log
Machine: RTE10
Parameter Set: PARAM2
Index: 0
Seed: 46329
Configured Users: 890
Pipe Name: RTE01A24637018
Connect Rate: 300
Start Rate: 0
Max. Concurrency: 1000
Concurrency Rate: 10
CLIENT_NURAND: 233
CPU: 0

Name: RTE01B
Description: RTE12_toclient
Directory: c:\rtelogs\RTE01B.log
Machine: RTE10
Parameter Set: PARAM2
Index: 3000000
Seed: 46329
Configured Users: 890
Pipe Name: RTE01B24637018
Connect Rate: 300
Start Rate: 0
Max. Concurrency: 1000
Concurrency Rate: 10
CLIENT_NURAND: 233
CPU: 1

Name: RTE01C
Description: RTE13_toclient
Directory: c:\rtelogs\RTE01C.log
Machine: RTE10
Parameter Set: PARAM2
Index: 6000000
Seed: 46329
Configured Users: 890
Pipe Name: RTE01C24637018
Connect Rate: 300
Start Rate: 0
Max. Concurrency: 1000
Concurrency Rate: 10
CLIENT_NURAND: 233
CPU: 0

Name: RTE01D
Description: RTE14_toclient
Directory: c:\rtelogs\RTE01D.log
Machine: RTE10
Parameter Set: PARAM2
Index: 9000000
Seed: 46329
Configured Users: 890
Pipe Name: RTE01D24637018
Connect Rate: 300
Start Rate: 0
Max. Concurrency: 1000
Concurrency Rate: 10
CLIENT_NURAND: 233
CPU: 1

Name: RTE01E
Description: RTE15_toclient
Directory: c:\rtelogs\RTE01E.log
Machine: RTE10
Parameter Set: PARAM2
Index: 12000000
Seed: 46329
Configured Users: 890
Pipe Name: RTE01E24637018
Connect Rate: 300
Start Rate: 0
Max. Concurrency: 1000
Concurrency Rate: 10
CLIENT_NURAND: 233
CPU: 0

Name: RTE01F
Description: RTE16_toclient
Directory: c:\rtelogs\RTE01F.log
Machine: RTE10
Parameter Set: PARAM2
Index: 15000000
Seed: 46329
Configured Users: 890
Pipe Name: RTE01F24637018
Connect Rate: 300
Start Rate: 0
Max. Concurrency: 1000
Concurrency Rate: 10
CLIENT_NURAND: 233
CPU: 1

Name: RTE01G
Description: RTE17_toclient
Directory: c:\rtelogs\RTE01G.log
Machine: RTE10
Parameter Set: PARAM2
Index: 18000000
Seed: 46329
Configured Users: 890
Pipe Name: RTE01G24637018
Connect Rate: 300
Start Rate: 0
Max. Concurrency: 1000
Concurrency Rate: 10
CLIENT_NURAND: 233
CPU: 0

Name: RTE01H
Description: RTE111_toclient
Directory: c:\rtelogs\RTE01H.log
Machine: RTE10
Parameter Set: PARAM2
Index: 21000000
Seed: 46329
Configured Users: 890
Pipe Name: RTE01H24637018
Connect Rate: 300
Start Rate: 0
Max. Concurrency: 1000
Concurrency Rate: 10
CLIENT_NURAND: 233
CPU: 1

Name: RTE01I
Description: RTE112_toclient
Directory: c:\rtelogs\RTE01I.log
Machine: RTE10
Parameter Set: PARAM2
Index: 24000000
Seed: 46329
Configured Users: 890
Pipe Name: RTE01I24637018
Connect Rate: 300
Start Rate: 0
Max. Concurrency: 1000
Concurrency Rate: 10
CLIENT_NURAND: 233
CPU: 0

Name: RTE01J
Description: RTE113_toclient
Directory: c:\rtelogs\RTE01J.log
Machine: RTE10
Parameter Set: PARAM2
Index: 27000000
Seed: 46329
Configured Users: 890
Pipe Name: RTE01J24637018
Connect Rate: 300
Start Rate: 0
Max. Concurrency: 1000
Concurrency Rate: 10
CLIENT_NURAND: 233
CPU: 1

Name: RTE01K
Description: RTE114_toclient
Directory: c:\rtelogs\RTE01K.log
Machine: RTE10
Parameter Set: PARAM2
Index: 30000000
Seed: 46329
Configured Users: 890
Pipe Name: RTE01K24637018
Connect Rate: 300
Start Rate: 0
Max. Concurrency: 1000
Concurrency Rate: 10
CLIENT_NURAND: 233
CPU: 0

Name: RTE01L
Description: RTE115_toclient
Directory: c:\rtelogs\RTE01L.log
Machine: RTE10
Parameter Set: PARAM2
Index: 33000000
Seed: 46329
Configured Users: 890
Pipe Name: RTE01L24637018
Connect Rate: 300
Start Rate: 0
Max. Concurrency: 1000
Concurrency Rate: 10
CLIENT_NURAND: 233
CPU: 1

Name: RTE01M
Description: RTE116_toclient
Directory: c:\rtelogs\RTE01M.log
Machine: RTE10
Parameter Set: PARAM2
Index: 36000000
Seed: 46329
Configured Users: 890
Pipe Name: RTE01M24637018
Connect Rate: 300
Start Rate: 0
Max. Concurrency: 1000
Concurrency Rate: 10
CLIENT_NURAND: 233
CPU: 0

Name: RTE01N
Description: RTE117_toclient
Directory: c:\rtelogs\RTE01N.log
Machine: RTE10
Parameter Set: PARAM2
Index: 39000000
Seed: 46329
Configured Users: 890
Pipe Name: RTE01N24637018
Connect Rate: 300
Start Rate: 0
Max. Concurrency: 1000
Concurrency Rate: 10
CLIENT_NURAND: 233
CPU: 1

Name: RTE02A
Description: RTE21_toclient
Directory: c:\rtelogs\RTE02A.log
Machine: RTE20
Parameter Set: PARAM2
Index: 42000000
Seed: 46329
Configured Users: 890
Pipe Name: RTE02A24637018
Connect Rate: 300
Start Rate: 0
Max. Concurrency: 1000
Concurrency Rate: 10
CLIENT_NURAND: 233
CPU: 0

Name: RTE02B
Description: RTE22_toclient
Directory: c:\rtelogs\RTE02B.log
Machine: RTE20
Parameter Set: PARAM2
Index: 45000000
Seed: 46329
Configured Users: 890
Pipe Name: RTE02B24637018
Connect Rate: 300
Start Rate: 0
Max. Concurrency: 1000
Concurrency Rate: 10
CLIENT_NURAND: 233
CPU: 1

Name: RTE02C
Description: RTE23_toclient
Directory: c:\rtelogs\RTE02C.log
Machine: RTE20
Parameter Set: PARAM2
Index: 48000000
Seed: 46329

Configured Users: 890
Pipe Name: RTE02C24637018
Connect Rate: 300
Start Rate: 0
Max. Concurrency: 1000
Concurrency Rate: 10
CLIENT_NURAND: 233
CPU: 0

Name: RTE02D
Description: RTE24_toclient
Directory: c:\rtelogs\RTE02D.log
Machine: RTE20
Parameter Set: PARAM2
Index: 51000000
Seed: 46329
Configured Users: 890
Pipe Name: RTE02D24637018
Connect Rate: 300
Start Rate: 0
Max. Concurrency: 1000
Concurrency Rate: 10
CLIENT_NURAND: 233
CPU: 1

Name: RTE02E
Description: RTE25_toclient
Directory: c:\rtelogs\RTE02E.log
Machine: RTE20
Parameter Set: PARAM2
Index: 54000000
Seed: 46329
Configured Users: 890
Pipe Name: RTE02E24637018
Connect Rate: 300
Start Rate: 0
Max. Concurrency: 1000
Concurrency Rate: 10
CLIENT_NURAND: 233
CPU: 0

Name: RTE02F
Description: RTE26_toclient
Directory: c:\rtelogs\RTE02F.log
Machine: RTE20
Parameter Set: PARAM2
Index: 57000000
Seed: 46329
Configured Users: 890
Pipe Name: RTE02F24637018
Connect Rate: 300
Start Rate: 0
Max. Concurrency: 1000
Concurrency Rate: 10
CLIENT_NURAND: 233
CPU: 1

Name: RTE02G
Description: RTE27_toclient
Directory: c:\rtelogs\RTE02G.log
Machine: RTE20
Parameter Set: PARAM2
Index: 60000000
Seed: 46329
Configured Users: 890
Pipe Name: RTE02G24637018
Connect Rate: 300
Start Rate: 0
Max. Concurrency: 1000
Concurrency Rate: 10
CLIENT_NURAND: 233
CPU: 0

Name: RTE02H
Description: RTE211_toclient
Directory: c:\rtelogs\RTE02H.log
Machine: RTE20
Parameter Set: PARAM2
Index: 63000000
Seed: 46329
Configured Users: 890
Pipe Name: RTE02H24637018
Connect Rate: 300
Start Rate: 0
Max. Concurrency: 1000
Concurrency Rate: 10
CLIENT_NURAND: 233
CPU: 1

Name: RTE02I
Description: RTE212_toclient
Directory: c:\rtelogs\RTE02I.log
Machine: RTE20
Parameter Set: PARAM2
Index: 66000000
Seed: 46329
Configured Users: 890
Pipe Name: RTE02I24637018
Connect Rate: 300
Start Rate: 0
Max. Concurrency: 1000
Concurrency Rate: 10
CLIENT_NURAND: 233
CPU: 0

Name: RTE02J
Description: RTE213_toclient
Directory: c:\rtelogs\RTE02J.log
Machine: RTE20
Parameter Set: PARAM2
Index: 69000000
Seed: 46329
Configured Users: 890
Pipe Name: RTE02J24637018
Connect Rate: 300
Start Rate: 0
Max. Concurrency: 1000
Concurrency Rate: 10
CLIENT_NURAND: 233
CPU: 1

Name: RTE02K
Description: RTE214_toclient
Directory: c:\rtelogs\RTE02K.log
Machine: RTE20
Parameter Set: PARAM2
Index: 72000000
Seed: 46329
Configured Users: 890
Pipe Name: RTE02K24637018
Connect Rate: 300
Start Rate: 0
Max. Concurrency: 1000
Concurrency Rate: 10
CLIENT_NURAND: 233
CPU: 0

Name: RTE02L
Description: RTE215_toclient
Directory: c:\rtelogs\RTE02L.log
Machine: RTE20
Parameter Set: PARAM2
Index: 75000000
Seed: 46329
Configured Users: 890
Pipe Name: RTE02L24637018
Connect Rate: 300
Start Rate: 0
Max. Concurrency: 1000
Concurrency Rate: 10
CLIENT_NURAND: 233
CPU: 1

Name: RTE02M
Description: RTE216_toclient
Directory: c:\rtelogs\RTE02M.log
Machine: RTE20
Parameter Set: PARAM2
Index: 78000000
Seed: 46329
Configured Users: 890
Pipe Name: RTE02M24637018
Connect Rate: 300
Start Rate: 0
Max. Concurrency: 1000
Concurrency Rate: 10
CLIENT_NURAND: 233
CPU: 0

Name: RTE02N
Description: RTE217_toclient
Directory: c:\rtelogs\RTE02N.log
Machine: RTE20
Parameter Set: PARAM2
Index: 81000000
Seed: 46329
Configured Users: 890
Pipe Name: RTE02N24637018
Connect Rate: 300
Start Rate: 0
Max. Concurrency: 1000
Concurrency Rate: 10
CLIENT_NURAND: 233
CPU: 1

Name: RTE03A
Description: RTE31_toclient
Directory: c:\rtelogs\RTE03A.log
Machine: RTE30
Parameter Set: PARAM2
Index: 84000000
Seed: 46329
Configured Users: 890
Pipe Name: RTE03A24637018
Connect Rate: 300
Start Rate: 0
Max. Concurrency: 1000
Concurrency Rate: 10
CLIENT_NURAND: 233
CPU: 0

Name: RTE03B
Description: RTE32_toclient
Directory: c:\rtelogs\RTE03B.log
Machine: RTE30
Parameter Set: PARAM2
Index: 87000000
Seed: 46329
Configured Users: 890
Pipe Name: RTE03B24637018
Connect Rate: 300
Start Rate: 0
Max. Concurrency: 1000
Concurrency Rate: 10
CLIENT_NURAND: 233
CPU: 1

Name: RTE03C
Description: RTE33_toclient
Directory: c:\rtelogs\RTE03C.log
Machine: RTE30
Parameter Set: PARAM2
Index: 90000000
Seed: 46329
Configured Users: 890
Pipe Name: RTE03C24637018
Connect Rate: 300
Start Rate: 0
Max. Concurrency: 1000
Concurrency Rate: 10
CLIENT_NURAND: 233
CPU: 0

Name: RTE03D
Description: RTE34_toclient
Directory: c:\rtelogs\RTE03D.log
Machine: RTE30
Parameter Set: PARAM2
Index: 93000000
Seed: 46329
Configured Users: 890
Pipe Name: RTE03D24637018
Connect Rate: 300
Start Rate: 0
Max. Concurrency: 1000
Concurrency Rate: 10
CLIENT_NURAND: 233
CPU: 1

Name: RTE03E
Description: RTE35_toclient
Directory: c:\rtelogs\RTE03E.log
Machine: RTE30
Parameter Set: PARAM2
Index: 96000000
Seed: 46329
Configured Users: 890
Pipe Name: RTE03E24637018
Connect Rate: 300
Start Rate: 0
Max. Concurrency: 1000
Concurrency Rate: 10
CLIENT_NURAND: 233
CPU: 0

Name: RTE03F
Description: RTE36_toclient
Directory: c:\rtelogs\RTE03F.log
Machine: RTE30
Parameter Set: PARAM2
Index: 99000000
Seed: 46329

Configured Users: 890
Pipe Name: RTE03F24637018
Connect Rate: 300
Start Rate: 0
Max. Concurrency: 1000
Concurrency Rate: 10
CLIENT_NURAND: 233
CPU: 1

Name: RTE03G
Description: RTE37_toclient
Directory: c:\rtelogs\RTE03G.log
Machine: RTE30
Parameter Set: PARAM2
Index: 102000000
Seed: 46329
Configured Users: 890
Pipe Name: RTE03G24637018
Connect Rate: 300
Start Rate: 0
Max. Concurrency: 1000
Concurrency Rate: 10
CLIENT_NURAND: 233
CPU: 0

Name: RTE03H
Description: RTE311_toclient
Directory: c:\rtelogs\RTE03H.log
Machine: RTE30
Parameter Set: PARAM2
Index: 105000000
Seed: 46329
Configured Users: 890
Pipe Name: RTE03H24637018
Connect Rate: 300
Start Rate: 0
Max. Concurrency: 1000
Concurrency Rate: 10
CLIENT_NURAND: 233
CPU: 1

Name: RTE03I
Description: RTE312_toclient
Directory: c:\rtelogs\RTE03I.log
Machine: RTE30
Parameter Set: PARAM2
Index: 108000000
Seed: 46329
Configured Users: 890
Pipe Name: RTE03I24637018
Connect Rate: 300
Start Rate: 0
Max. Concurrency: 1000
Concurrency Rate: 10
CLIENT_NURAND: 233
CPU: 0

Name: RTE03J
Description: RTE313_toclient
Directory: c:\rtelogs\RTE03J.log
Machine: RTE30
Parameter Set: PARAM2
Index: 111000000
Seed: 46329
Configured Users: 890
Pipe Name: RTE03J24637018
Connect Rate: 300
Start Rate: 0
Max. Concurrency: 1000
Concurrency Rate: 10
CLIENT_NURAND: 233
CPU: 1

Name: RTE03K
Description: RTE314_toclient
Directory: c:\rtelogs\RTE03K.log
Machine: RTE30
Parameter Set: PARAM2
Index: 114000000
Seed: 46329
Configured Users: 890
Pipe Name: RTE03K24637018
Connect Rate: 300
Start Rate: 0
Max. Concurrency: 1000
Concurrency Rate: 10
CLIENT_NURAND: 233
CPU: 0

Name: RTE03L
Description: RTE315_toclient
Directory: c:\rtelogs\RTE03L.log
Machine: RTE30
Parameter Set: PARAM2
Index: 117000000
Seed: 46329
Configured Users: 890
Pipe Name: RTE03L24637018
Connect Rate: 300
Start Rate: 0
Max. Concurrency: 1000
Concurrency Rate: 10
CLIENT_NURAND: 233
CPU: 1

Name: RTE03M
Description: RTE316_toclient
Directory: c:\rtelogs\RTE03M.log
Machine: RTE30
Parameter Set: PARAM2
Index: 120000000
Seed: 46329
Configured Users: 890
Pipe Name: RTE03M24637018
Connect Rate: 300
Start Rate: 0
Max. Concurrency: 1000
Concurrency Rate: 10
CLIENT_NURAND: 233
CPU: 0

Name: RTE03N
Description: RTE317_toclient
Directory: c:\rtelogs\RTE03N.log
Machine: RTE30
Parameter Set: PARAM2
Index: 123000000
Seed: 46329
Configured Users: 890
Pipe Name: RTE03N24637018
Connect Rate: 300
Start Rate: 0
Max. Concurrency: 1000
Concurrency Rate: 10
CLIENT_NURAND: 233
CPU: 1

Name: RTE04A
Description: RTE41_toclient
Directory: c:\rtelogs\RTE04A.log
Machine: RTE40
Parameter Set: PARAM2
Index: 126000000
Seed: 46329
Configured Users: 890
Pipe Name: RTE04A24637018
Connect Rate: 300
Start Rate: 0
Max. Concurrency: 1000
Concurrency Rate: 10
CLIENT_NURAND: 233
CPU: 0

Name: RTE04B
Description: RTE42_toclient
Directory: c:\rtelogs\RTE04B.log
Machine: RTE40
Parameter Set: PARAM2
Index: 129000000
Seed: 46329
Configured Users: 890
Pipe Name: RTE04B24637018
Connect Rate: 300
Start Rate: 0
Max. Concurrency: 1000
Concurrency Rate: 10
CLIENT_NURAND: 233
CPU: 1

Name: RTE04C
Description: RTE43_toclient
Directory: c:\rtelogs\RTE04C.log
Machine: RTE40
Parameter Set: PARAM2
Index: 132000000
Seed: 46329
Configured Users: 890
Pipe Name: RTE04C24637018
Connect Rate: 300
Start Rate: 0
Max. Concurrency: 1000
Concurrency Rate: 10
CLIENT_NURAND: 233
CPU: 0

Name: RTE04D
Description: RTE44_toclient
Directory: c:\rtelogs\RTE04D.log
Machine: RTE40
Parameter Set: PARAM2
Index: 135000000
Seed: 46329
Configured Users: 890
Pipe Name: RTE04D24637018
Connect Rate: 300
Start Rate: 0
Max. Concurrency: 1000
Concurrency Rate: 10
CLIENT_NURAND: 233
CPU: 1

Name: RTE04E
Description: RTE45_toclient
Directory: c:\rtelogs\RTE04E.log
Machine: RTE40
Parameter Set: PARAM2
Index: 138000000
Seed: 46329
Configured Users: 890
Pipe Name: RTE04E24637018
Connect Rate: 300
Start Rate: 0
Max. Concurrency: 1000
Concurrency Rate: 10
CLIENT_NURAND: 233
CPU: 0

Name: RTE04F
Description: RTE46_toclient
Directory: c:\rtelogs\RTE04F.log
Machine: RTE40
Parameter Set: PARAM2
Index: 141000000
Seed: 46329
Configured Users: 890
Pipe Name: RTE04F24637018
Connect Rate: 300
Start Rate: 0
Max. Concurrency: 1000
Concurrency Rate: 10
CLIENT_NURAND: 233
CPU: 1

Name: RTE04G
Description: RTE47_toclient
Directory: c:\rtelogs\RTE04G.log
Machine: RTE40
Parameter Set: PARAM2
Index: 144000000
Seed: 46329
Configured Users: 890
Pipe Name: RTE04G24637018
Connect Rate: 300
Start Rate: 0
Max. Concurrency: 1000
Concurrency Rate: 10
CLIENT_NURAND: 233
CPU: 0

Name: RTE04H
Description: RTE411_toclient
Directory: c:\rtelogs\RTE04H.log
Machine: RTE40
Parameter Set: PARAM2
Index: 147000000
Seed: 46329
Configured Users: 890
Pipe Name: RTE04H24637018
Connect Rate: 300
Start Rate: 0
Max. Concurrency: 1000
Concurrency Rate: 10
CLIENT_NURAND: 233
CPU: 1

Name: RTE04I
Description: RTE412_toclient
Directory: c:\rtelogs\RTE04I.log
Machine: RTE40
Parameter Set: PARAM2
Index: 150000000
Seed: 46329

Configured Users: 890
Pipe Name: RTE04I24637018
Connect Rate: 300
Start Rate: 0
Max. Concurrency: 1000
Concurrency Rate: 10
CLIENT_NURAND: 233
CPU: 0

Name: RTE04J
Description: RTE413_toclient
Directory: c:\rtelogs\RTE04J.log
Machine: RTE40
Parameter Set: PARAM2
Index: 153000000
Seed: 46329
Configured Users: 890
Pipe Name: RTE04J24637018
Connect Rate: 300
Start Rate: 0
Max. Concurrency: 1000
Concurrency Rate: 10
CLIENT_NURAND: 233
CPU: 1

Name: RTE04K
Description: RTE414_toclient
Directory: c:\rtelogs\RTE04K.log
Machine: RTE40
Parameter Set: PARAM2
Index: 156000000
Seed: 46329
Configured Users: 890
Pipe Name: RTE04K24637018
Connect Rate: 300
Start Rate: 0
Max. Concurrency: 1000
Concurrency Rate: 10
CLIENT_NURAND: 233
CPU: 0

Name: RTE04L
Description: RTE415_toclient
Directory: c:\rtelogs\RTE04L.log
Machine: RTE40
Parameter Set: PARAM2
Index: 159000000
Seed: 46329
Configured Users: 890
Pipe Name: RTE04L24637018
Connect Rate: 300
Start Rate: 0
Max. Concurrency: 1000
Concurrency Rate: 10
CLIENT_NURAND: 233
CPU: 1

Name: RTE04M
Description: RTE416_toclient
Directory: c:\rtelogs\RTE04M.log
Machine: RTE40
Parameter Set: PARAM2
Index: 162000000
Seed: 46329
Configured Users: 890
Pipe Name: RTE04M24637018
Connect Rate: 300
Start Rate: 0
Max. Concurrency: 1000
Concurrency Rate: 10
CLIENT_NURAND: 233
CPU: 0

Name: RTE04N
Description: RTE417_toclient
Directory: c:\rtelogs\RTE04N.log
Machine: RTE40
Parameter Set: PARAM2
Index: 165000000
Seed: 46329
Configured Users: 890
Pipe Name: RTE04N24637018
Connect Rate: 300
Start Rate: 0
Max. Concurrency: 1000
Concurrency Rate: 10
CLIENT_NURAND: 233
CPU: 1

Name: RTE05A
Description: RTE51_toclient
Directory: c:\rtelogs\RTE05A.log
Machine: RTE50
Parameter Set: PARAM2
Index: 168000000
Seed: 46329
Configured Users: 890
Pipe Name: RTE05A24637018
Connect Rate: 300
Start Rate: 0
Max. Concurrency: 1000
Concurrency Rate: 10
CLIENT_NURAND: 233
CPU: 0

Name: RTE05B
Description: RTE52_toclient
Directory: c:\rtelogs\RTE05B.log
Machine: RTE50
Parameter Set: PARAM2
Index: 171000000
Seed: 46329
Configured Users: 890
Pipe Name: RTE05B24637018
Connect Rate: 300
Start Rate: 0
Max. Concurrency: 1000
Concurrency Rate: 10
CLIENT_NURAND: 233
CPU: 1

Name: RTE05C
Description: RTE53_toclient
Directory: c:\rtelogs\RTE05C.log
Machine: RTE50
Parameter Set: PARAM2
Index: 174000000
Seed: 46329
Configured Users: 890
Pipe Name: RTE05C24637018
Connect Rate: 300
Start Rate: 0
Max. Concurrency: 1000
Concurrency Rate: 10
CLIENT_NURAND: 233
CPU: 0

Name: RTE05D
Description: RTE54_toclient
Directory: c:\rtelogs\RTE05D.log
Machine: RTE50
Parameter Set: PARAM2
Index: 177000000
Seed: 46329
Configured Users: 890
Pipe Name: RTE05D24637018
Connect Rate: 300
Start Rate: 0
Max. Concurrency: 1000
Concurrency Rate: 10
CLIENT_NURAND: 233
CPU: 1

Name: RTE05E
Description: RTE55_toclient
Directory: c:\rtelogs\RTE05E.log
Machine: RTE50
Parameter Set: PARAM2
Index: 180000000
Seed: 46329
Configured Users: 890
Pipe Name: RTE05E24637018
Connect Rate: 300
Start Rate: 0
Max. Concurrency: 1000
Concurrency Rate: 10
CLIENT_NURAND: 233
CPU: 0

Name: RTE05F
Description: RTE56_toclient
Directory: c:\rtelogs\RTE05F.log
Machine: RTE50
Parameter Set: PARAM2
Index: 183000000
Seed: 46329
Configured Users: 890
Pipe Name: RTE05F24637018
Connect Rate: 300
Start Rate: 0
Max. Concurrency: 1000
Concurrency Rate: 10
CLIENT_NURAND: 233
CPU: 1

Name: RTE05G
Description: RTE57_toclient
Directory: c:\rtelogs\RTE05G.log
Machine: RTE50
Parameter Set: PARAM2
Index: 186000000
Seed: 46329
Configured Users: 890
Pipe Name: RTE05G24637018
Connect Rate: 300
Start Rate: 0
Max. Concurrency: 1000
Concurrency Rate: 10
CLIENT_NURAND: 233
CPU: 0

Name: RTE05H
Description: RTE511_toclient
Directory: c:\rtelogs\RTE05H.log
Machine: RTE50
Parameter Set: PARAM2
Index: 189000000
Seed: 46329
Configured Users: 890
Pipe Name: RTE05H24637018
Connect Rate: 300
Start Rate: 0
Max. Concurrency: 1000
Concurrency Rate: 10
CLIENT_NURAND: 233
CPU: 1

Name: RTE05I
Description: RTE512_toclient
Directory: c:\rtelogs\RTE05I.log
Machine: RTE50
Parameter Set: PARAM2
Index: 192000000
Seed: 46329
Configured Users: 890
Pipe Name: RTE05I24637018
Connect Rate: 300
Start Rate: 0
Max. Concurrency: 1000
Concurrency Rate: 10
CLIENT_NURAND: 233
CPU: 0

Name: RTE05J
Description: RTE513_toclient
Directory: c:\rtelogs\RTE05J.log
Machine: RTE50
Parameter Set: PARAM2
Index: 195000000
Seed: 46329
Configured Users: 890
Pipe Name: RTE05J24637018
Connect Rate: 300
Start Rate: 0
Max. Concurrency: 1000
Concurrency Rate: 10
CLIENT_NURAND: 233
CPU: 1

Name: RTE05K
Description: RTE514_toclient
Directory: c:\rtelogs\RTE05K.log
Machine: RTE50
Parameter Set: PARAM2
Index: 198000000
Seed: 46329
Configured Users: 890
Pipe Name: RTE05K24637018
Connect Rate: 300
Start Rate: 0
Max. Concurrency: 1000
Concurrency Rate: 10
CLIENT_NURAND: 233
CPU: 0

Name: RTE05L
Description: RTE515_toclient
Directory: c:\rtelogs\RTE05L.log
Machine: RTE50
Parameter Set: PARAM2
Index: 201000000
Seed: 46329

Configured Users: 890
Pipe Name: RTE05L24637018
Connect Rate: 300
Start Rate: 0
Max. Concurrency: 1000
Concurrency Rate: 10
CLIENT_NURAND: 233
CPU: 1

Name: RTE05M
Description: RTE516_toclient
Directory: c:\rtelogs\RTE05M.log
Machine: RTE50
Parameter Set: PARAM2
Index: 204000000
Seed: 46329
Configured Users: 890
Pipe Name: RTE05M24637018
Connect Rate: 300
Start Rate: 0
Max. Concurrency: 1000
Concurrency Rate: 10
CLIENT_NURAND: 233
CPU: 0

Name: RTE05N
Description: RTE517_toclient
Directory: c:\rtelogs\RTE05N.log
Machine: RTE50
Parameter Set: PARAM2
Index: 207000000
Seed: 46329
Configured Users: 890
Pipe Name: RTE05N24637018
Connect Rate: 300
Start Rate: 0
Max. Concurrency: 1000
Concurrency Rate: 10
CLIENT_NURAND: 233
CPU: 1

Name: RTE06A
Description: RTE61_toclient
Directory: c:\rtelogs\RTE06A.log
Machine: RTE60
Parameter Set: PARAM2
Index: 210000000
Seed: 46329
Configured Users: 890
Pipe Name: RTE06A24637018
Connect Rate: 300
Start Rate: 0
Max. Concurrency: 1000
Concurrency Rate: 10
CLIENT_NURAND: 233
CPU: 0

Name: RTE06B
Description: RTE62_toclient
Directory: c:\rtelogs\RTE06B.log
Machine: RTE60
Parameter Set: PARAM2
Index: 213000000
Seed: 46329
Configured Users: 890
Pipe Name: RTE06B24637018
Connect Rate: 300
Start Rate: 0
Max. Concurrency: 1000
Concurrency Rate: 10
CLIENT_NURAND: 233
CPU: 1

Name: RTE06C
Description: RTE63_toclient
Directory: c:\rtelogs\RTE06C.log
Machine: RTE60
Parameter Set: PARAM2
Index: 216000000
Seed: 46329
Configured Users: 890
Pipe Name: RTE06C24637018
Connect Rate: 300
Start Rate: 0
Max. Concurrency: 1000
Concurrency Rate: 10
CLIENT_NURAND: 233
CPU: 0

Name: RTE06D
Description: RTE64_toclient
Directory: c:\rtelogs\RTE06D.log
Machine: RTE60
Parameter Set: PARAM2
Index: 219000000
Seed: 46329
Configured Users: 890
Pipe Name: RTE06D24637018
Connect Rate: 300
Start Rate: 0
Max. Concurrency: 1000
Concurrency Rate: 10
CLIENT_NURAND: 233
CPU: 1

Name: RTE06E
Description: RTE65_toclient
Directory: c:\rtelogs\RTE06E.log
Machine: RTE60
Parameter Set: PARAM2
Index: 222000000
Seed: 46329
Configured Users: 890
Pipe Name: RTE06E24637018
Connect Rate: 300
Start Rate: 0
Max. Concurrency: 1000
Concurrency Rate: 10
CLIENT_NURAND: 233
CPU: 0

Name: RTE06F
Description: RTE66_toclient
Directory: c:\rtelogs\RTE06F.log
Machine: RTE60
Parameter Set: PARAM2
Index: 225000000
Seed: 46329
Configured Users: 890
Pipe Name: RTE06F24637018
Connect Rate: 300
Start Rate: 0
Max. Concurrency: 1000
Concurrency Rate: 10
CLIENT_NURAND: 233
CPU: 1

Name: RTE06G
Description: RTE67_toclient
Directory: c:\rtelogs\RTE06G.log
Machine: RTE60
Parameter Set: PARAM2
Index: 228000000
Seed: 46329
Configured Users: 890
Pipe Name: RTE06G24637018
Connect Rate: 300
Start Rate: 0
Max. Concurrency: 1000
Concurrency Rate: 10
CLIENT_NURAND: 233
CPU: 0

Name: RTE06H
Description: RTE611_toclient
Directory: c:\rtelogs\RTE06H.log
Machine: RTE60
Parameter Set: PARAM2
Index: 231000000
Seed: 46329
Configured Users: 890
Pipe Name: RTE06H24637018
Connect Rate: 300
Start Rate: 0
Max. Concurrency: 1000
Concurrency Rate: 10
CLIENT_NURAND: 233
CPU: 1

Name: RTE06I
Description: RTE612_toclient
Directory: c:\rtelogs\RTE06I.log
Machine: RTE60
Parameter Set: PARAM2
Index: 234000000
Seed: 46329
Configured Users: 890
Pipe Name: RTE06I24637018
Connect Rate: 300
Start Rate: 0
Max. Concurrency: 1000
Concurrency Rate: 10
CLIENT_NURAND: 233
CPU: 0

Name: RTE06J
Description: RTE613_toclient
Directory: c:\rtelogs\RTE06J.log
Machine: RTE60
Parameter Set: PARAM2
Index: 237000000
Seed: 46329
Configured Users: 890
Pipe Name: RTE06J24637018
Connect Rate: 300
Start Rate: 0
Max. Concurrency: 1000
Concurrency Rate: 10
CLIENT_NURAND: 233
CPU: 1

Name: RTE06K
Description: RTE614_toclient
Directory: c:\rtelogs\RTE06K.log
Machine: RTE60
Parameter Set: PARAM2
Index: 240000000
Seed: 46329
Configured Users: 890
Pipe Name: RTE06K24637018
Connect Rate: 300
Start Rate: 0
Max. Concurrency: 1000
Concurrency Rate: 10
CLIENT_NURAND: 233
CPU: 0

Name: RTE06L
Description: RTE615_toclient
Directory: c:\rtelogs\RTE06L.log
Machine: RTE60
Parameter Set: PARAM2
Index: 243000000
Seed: 46329
Configured Users: 890
Pipe Name: RTE06L24637018
Connect Rate: 300
Start Rate: 0
Max. Concurrency: 1000
Concurrency Rate: 10
CLIENT_NURAND: 233
CPU: 1

Name: RTE06M
Description: RTE616_toclient
Directory: c:\rtelogs\RTE06M.log
Machine: RTE60
Parameter Set: PARAM2
Index: 246000000
Seed: 46329
Configured Users: 890
Pipe Name: RTE06M24637018
Connect Rate: 300
Start Rate: 0
Max. Concurrency: 1000
Concurrency Rate: 10
CLIENT_NURAND: 233
CPU: 0

Name: RTE06N
Description: RTE617_toclient
Directory: c:\rtelogs\RTE06N.log
Machine: RTE60
Parameter Set: PARAM2
Index: 249000000
Seed: 46329
Configured Users: 890
Pipe Name: RTE06N24637018
Connect Rate: 300
Start Rate: 0
Max. Concurrency: 1000
Concurrency Rate: 10
CLIENT_NURAND: 233
CPU: 1

Name: RTE07A
Description: RTE71_toclient
Directory: c:\rtelogs\RTE07A.log
Machine: RTE70
Parameter Set: PARAM2
Index: 252000000
Seed: 46329

Configured Users: 890
Pipe Name: RTE07A24637018
Connect Rate: 300
Start Rate: 0
Max. Concurrency: 1000
Concurrency Rate: 10
CLIENT_NURAND: 233
CPU: 0

Name: RTE07B
Description: RTE72_toclient
Directory: c:\rtelogs\RTE07B.log
Machine: RTE70
Parameter Set: PARAM2
Index: 255000000
Seed: 46329
Configured Users: 890
Pipe Name: RTE07B24637018
Connect Rate: 300
Start Rate: 0
Max. Concurrency: 1000
Concurrency Rate: 10
CLIENT_NURAND: 233
CPU: 1

Name: RTE07C
Description: RTE73_toclient
Directory: c:\rtelogs\RTE07C.log
Machine: RTE70
Parameter Set: PARAM2
Index: 258000000
Seed: 46329
Configured Users: 890
Pipe Name: RTE07C24637018
Connect Rate: 300
Start Rate: 0
Max. Concurrency: 1000
Concurrency Rate: 10
CLIENT_NURAND: 233
CPU: 0

Name: RTE07D
Description: RTE74_toclient
Directory: c:\rtelogs\RTE07D.log
Machine: RTE70
Parameter Set: PARAM2
Index: 261000000
Seed: 46329
Configured Users: 890
Pipe Name: RTE07D24637018
Connect Rate: 300
Start Rate: 0
Max. Concurrency: 1000
Concurrency Rate: 10
CLIENT_NURAND: 233
CPU: 1

Name: RTE07E
Description: RTE75_toclient
Directory: c:\rtelogs\RTE07E.log
Machine: RTE70
Parameter Set: PARAM2
Index: 264000000
Seed: 46329
Configured Users: 890
Pipe Name: RTE07E24637018
Connect Rate: 300
Start Rate: 0
Max. Concurrency: 1000
Concurrency Rate: 10
CLIENT_NURAND: 233
CPU: 0

Name: RTE07F
Description: RTE76_toclient
Directory: c:\rtelogs\RTE07F.log
Machine: RTE70
Parameter Set: PARAM2
Index: 267000000
Seed: 46329
Configured Users: 890
Pipe Name: RTE07F24637018
Connect Rate: 300
Start Rate: 0
Max. Concurrency: 1000
Concurrency Rate: 10
CLIENT_NURAND: 233
CPU: 1

Name: RTE07G
Description: RTE77_toclient
Directory: c:\rtelogs\RTE07G.log
Machine: RTE70
Parameter Set: PARAM2
Index: 270000000
Seed: 46329
Configured Users: 890
Pipe Name: RTE07G24637018
Connect Rate: 300
Start Rate: 0
Max. Concurrency: 1000
Concurrency Rate: 10
CLIENT_NURAND: 233
CPU: 0

Name: RTE07H
Description: RTE711_toclient
Directory: c:\rtelogs\RTE07H.log
Machine: RTE70
Parameter Set: PARAM2
Index: 273000000
Seed: 46329
Configured Users: 890
Pipe Name: RTE07H24637023
Connect Rate: 300
Start Rate: 0
Max. Concurrency: 1000
Concurrency Rate: 10
CLIENT_NURAND: 233
CPU: 1

Name: RTE07I
Description: RTE712_toclient
Directory: c:\rtelogs\RTE07I.log
Machine: RTE70
Parameter Set: PARAM2
Index: 276000000
Seed: 46329
Configured Users: 890
Pipe Name: RTE07I24637023
Connect Rate: 300
Start Rate: 0
Max. Concurrency: 1000
Concurrency Rate: 10
CLIENT_NURAND: 233
CPU: 0

Name: RTE07J
Description: RTE713_toclient
Directory: c:\rtelogs\RTE07J.log
Machine: RTE70
Parameter Set: PARAM2
Index: 279000000
Seed: 46329
Configured Users: 890
Pipe Name: RTE07J24637023
Connect Rate: 300
Start Rate: 0
Max. Concurrency: 1000
Concurrency Rate: 10
CLIENT_NURAND: 233
CPU: 1

Name: RTE07K
Description: RTE714_toclient
Directory: c:\rtelogs\RTE07K.log
Machine: RTE70
Parameter Set: PARAM2
Index: 282000000
Seed: 46329
Configured Users: 890
Pipe Name: RTE07K24637023
Connect Rate: 300
Start Rate: 0
Max. Concurrency: 1000
Concurrency Rate: 10
CLIENT_NURAND: 233
CPU: 0

Name: RTE07L
Description: RTE715_toclient
Directory: c:\rtelogs\RTE07L.log
Machine: RTE70
Parameter Set: PARAM2
Index: 285000000
Seed: 46329
Configured Users: 890
Pipe Name: RTE07L24637023
Connect Rate: 300
Start Rate: 0
Max. Concurrency: 1000
Concurrency Rate: 10
CLIENT_NURAND: 233
CPU: 1

Name: RTE07M
Description: RTE716_toclient
Directory: c:\rtelogs\RTE07M.log
Machine: RTE70
Parameter Set: PARAM2
Index: 288000000
Seed: 46329
Configured Users: 890
Pipe Name: RTE07M24637023
Connect Rate: 300
Start Rate: 0
Max. Concurrency: 1000
Concurrency Rate: 10
CLIENT_NURAND: 233
CPU: 0

Name: RTE07N
Description: RTE717_toclient
Directory: c:\rtelogs\RTE07N.log
Machine: RTE70
Parameter Set: PARAM2
Index: 291000000
Seed: 46329
Configured Users: 890
Pipe Name: RTE07N24637023
Connect Rate: 300
Start Rate: 0
Max. Concurrency: 1000
Concurrency Rate: 10
CLIENT_NURAND: 233
CPU: 1

Name: RTE08A
Description: RTE81_toclient
Directory: c:\rtelogs\RTE08A.log
Machine: RTE80
Parameter Set: PARAM2
Index: 294000000
Seed: 46329
Configured Users: 890
Pipe Name: RTE08A24637023
Connect Rate: 300
Start Rate: 0
Max. Concurrency: 1000
Concurrency Rate: 10
CLIENT_NURAND: 233
CPU: 0

Name: RTE08B
Description: RTE82_toclient
Directory: c:\rtelogs\RTE08B.log
Machine: RTE80
Parameter Set: PARAM2
Index: 297000000
Seed: 46329
Configured Users: 890
Pipe Name: RTE08B24637023
Connect Rate: 300
Start Rate: 0
Max. Concurrency: 1000
Concurrency Rate: 10
CLIENT_NURAND: 233
CPU: 1

Name: RTE08C
Description: RTE83_toclient
Directory: c:\rtelogs\RTE08C.log
Machine: RTE80
Parameter Set: PARAM2
Index: 300000000
Seed: 46329
Configured Users: 890
Pipe Name: RTE08C24637023
Connect Rate: 300
Start Rate: 0
Max. Concurrency: 1000
Concurrency Rate: 10
CLIENT_NURAND: 233
CPU: 0

Name: RTE08D
Description: RTE84_toclient
Directory: c:\rtelogs\RTE08D.log
Machine: RTE80
Parameter Set: PARAM2
Index: 303000000
Seed: 46329

Configured Users: 890
Pipe Name: RTE08D24637023
Connect Rate: 300
Start Rate: 0
Max. Concurrency: 1000
Concurrency Rate: 10
CLIENT_NURAND: 233
CPU: 1

Name: RTE08E
Description: RTE85_toclient
Directory: c:\rtelogs\RTE08E.log
Machine: RTE80
Parameter Set: PARAM2
Index: 306000000
Seed: 46329
Configured Users: 890
Pipe Name: RTE08E24637023
Connect Rate: 300
Start Rate: 0
Max. Concurrency: 1000
Concurrency Rate: 10
CLIENT_NURAND: 233
CPU: 0

Name: RTE08F
Description: RTE86_toclient
Directory: c:\rtelogs\RTE08F.log
Machine: RTE80
Parameter Set: PARAM2
Index: 309000000
Seed: 46329
Configured Users: 890
Pipe Name: RTE08F24637023
Connect Rate: 300
Start Rate: 0
Max. Concurrency: 1000
Concurrency Rate: 10
CLIENT_NURAND: 233
CPU: 1

Name: RTE08G
Description: RTE87_toclient
Directory: c:\rtelogs\RTE08G.log
Machine: RTE80
Parameter Set: PARAM2
Index: 312000000
Seed: 46329
Configured Users: 890
Pipe Name: RTE08G24637023
Connect Rate: 300
Start Rate: 0
Max. Concurrency: 1000
Concurrency Rate: 10
CLIENT_NURAND: 233
CPU: 0

Name: RTE08H
Description: RTE811_toclient
Directory: c:\rtelogs\RTE08H.log
Machine: RTE80
Parameter Set: PARAM2
Index: 315000000
Seed: 46329
Configured Users: 890
Pipe Name: RTE08H24637023
Connect Rate: 300
Start Rate: 0
Max. Concurrency: 1000
Concurrency Rate: 10
CLIENT_NURAND: 233
CPU: 1

Name: RTE08I
Description: RTE812_toclient
Directory: c:\rtelogs\RTE08I.log
Machine: RTE80
Parameter Set: PARAM2
Index: 318000000
Seed: 46329
Configured Users: 890
Pipe Name: RTE08I24637023
Connect Rate: 300
Start Rate: 0
Max. Concurrency: 1000
Concurrency Rate: 10
CLIENT_NURAND: 233
CPU: 0

Name: RTE08J
Description: RTE813_toclient
Directory: c:\rtelogs\RTE08J.log
Machine: RTE80
Parameter Set: PARAM2
Index: 321000000
Seed: 46329
Configured Users: 890
Pipe Name: RTE08J24637023
Connect Rate: 300
Start Rate: 0
Max. Concurrency: 1000
Concurrency Rate: 10
CLIENT_NURAND: 233
CPU: 1

Name: RTE08K
Description: RTE814_toclient
Directory: c:\rtelogs\RTE08K.log
Machine: RTE80
Parameter Set: PARAM2
Index: 324000000
Seed: 46329
Configured Users: 890
Pipe Name: RTE08K24637023
Connect Rate: 300
Start Rate: 0
Max. Concurrency: 1000
Concurrency Rate: 10
CLIENT_NURAND: 233
CPU: 0

Name: RTE08L
Description: RTE815_toclient
Directory: c:\rtelogs\RTE08L.log
Machine: RTE80
Parameter Set: PARAM2
Index: 327000000
Seed: 46329
Configured Users: 890
Pipe Name: RTE08L24637023
Connect Rate: 300
Start Rate: 0
Max. Concurrency: 1000
Concurrency Rate: 10
CLIENT_NURAND: 233
CPU: 1

Name: RTE08M
Description: RTE816_toclient
Directory: c:\rtelogs\RTE08M.log
Machine: RTE80
Parameter Set: PARAM2
Index: 330000000
Seed: 46329
Configured Users: 890
Pipe Name: RTE08M24637023
Connect Rate: 300
Start Rate: 0
Max. Concurrency: 1000
Concurrency Rate: 10
CLIENT_NURAND: 233
CPU: 0

Name: RTE08N
Description: RTE817_toclient
Directory: c:\rtelogs\RTE08N.log
Machine: RTE80
Parameter Set: PARAM2
Index: 333000000
Seed: 46329
Configured Users: 890
Pipe Name: RTE08N24637023
Connect Rate: 300
Start Rate: 0
Max. Concurrency: 1000
Concurrency Rate: 10
CLIENT_NURAND: 233
CPU: 1

Number of User groups: 112

Driver Engine: RTE01A
IIS Server: CLIENT10_torte1
SQL Server: SERV1
Database: tpcc
User: sa
Protocol: HTML
w_id Range: 1 - 89
w_id Min Warehouse: 1
w_id Max Warehouse: 9968
Scale: Normal
User Count: 890
District id: 1
Scale Down: No

Driver Engine: RTE01B
IIS Server: CLIENT10_torte1
SQL Server: SERV1
Database: tpcc
User: sa
Protocol: HTML
w_id Range: 90 - 178
w_id Min Warehouse: 1
w_id Max Warehouse: 9968
Scale: Normal
User Count: 890
District id: 1
Scale Down: No

Driver Engine: RTE01C
IIS Server: CLIENT10_torte1
SQL Server: SERV1
Database: tpcc
User: sa
Protocol: HTML
w_id Range: 179 - 267
w_id Min Warehouse: 1
w_id Max Warehouse: 9968
Scale: Normal
User Count: 890
District id: 1
Scale Down: No

Driver Engine: RTE01D
IIS Server: CLIENT10_torte1
SQL Server: SERV1
Database: tpcc
User: sa
Protocol: HTML
w_id Range: 268 - 356
w_id Min Warehouse: 1
w_id Max Warehouse: 9968
Scale: Normal
User Count: 890
District id: 1
Scale Down: No

Driver Engine: RTE01E
IIS Server: CLIENT10_torte1
SQL Server: SERV1
Database: tpcc
User: sa
Protocol: HTML
w_id Range: 357 - 445
w_id Min Warehouse: 1
w_id Max Warehouse: 9968
Scale: Normal
User Count: 890
District id: 1
Scale Down: No

Driver Engine: RTE01F
IIS Server: CLIENT10_torte3
SQL Server: SERV1
Database: tpcc
User: sa
Protocol: HTML
w_id Range: 446 - 534
w_id Min Warehouse: 1
w_id Max Warehouse: 9968
Scale: Normal
User Count: 890
District id: 1
Scale Down: No

Driver Engine: RTE01G
IIS Server: CLIENT10_torte3
SQL Server: SERV1
Database: tpcc
User: sa
Protocol: HTML
w_id Range: 535 - 623
w_id Min Warehouse: 1
w_id Max Warehouse: 9968
Scale: Normal
User Count: 890
District id: 1
Scale Down: No

Driver Engine: RTE01H
IIS Server: CLIENT10_torte2
SQL Server: SERV1

Database: tpcc
User: sa
Protocol: HTML
w_id Range: 624 - 712
w_id Min Warehouse: 1
w_id Max Warehouse: 9968
Scale: Normal
User Count: 890
District id: 1
Scale Down: No

Driver Engine: RTE01I
IIS Server: CLIENT10_torte2
SQL Server: SERV1
Database: tpcc
User: sa
Protocol: HTML
w_id Range: 713 - 801
w_id Min Warehouse: 1
w_id Max Warehouse: 9968
Scale: Normal
User Count: 890
District id: 1
Scale Down: No

Driver Engine: RTE01J
IIS Server: CLIENT10_torte2
SQL Server: SERV1
Database: tpcc
User: sa
Protocol: HTML
w_id Range: 802 - 890
w_id Min Warehouse: 1
w_id Max Warehouse: 9968
Scale: Normal
User Count: 890
District id: 1
Scale Down: No

Driver Engine: RTE01K
IIS Server: CLIENT10_torte2
SQL Server: SERV1
Database: tpcc
User: sa
Protocol: HTML
w_id Range: 891 - 979
w_id Min Warehouse: 1
w_id Max Warehouse: 9968
Scale: Normal
User Count: 890
District id: 1
Scale Down: No

Driver Engine: RTE01L
IIS Server: CLIENT10_torte2
SQL Server: SERV1
Database: tpcc
User: sa
Protocol: HTML
w_id Range: 980 - 1068
w_id Min Warehouse: 1
w_id Max Warehouse: 9968
Scale: Normal
User Count: 890
District id: 1
Scale Down: No

Driver Engine: RTE01M
IIS Server: CLIENT10_torte3
SQL Server: SERV1
Database: tpcc
User: sa
Protocol: HTML
w_id Range: 1069 - 1157
w_id Min Warehouse: 1
w_id Max Warehouse: 9968
Scale: Normal
User Count: 890
District id: 1
Scale Down: No

Driver Engine: RTE01N
IIS Server: CLIENT10_torte3
SQL Server: SERV1
Database: tpcc
User: sa
Protocol: HTML
w_id Range: 1158 - 1246
w_id Min Warehouse: 1
w_id Max Warehouse: 9968
Scale: Normal
User Count: 890
District id: 1
Scale Down: No

Driver Engine: RTE02A
IIS Server: CLIENT20_torte1
SQL Server: SERV1
Database: tpcc
User: sa
Protocol: HTML
w_id Range: 1247 - 1335
w_id Min Warehouse: 1
w_id Max Warehouse: 9968
Scale: Normal
User Count: 890
District id: 1
Scale Down: No

Driver Engine: RTE02B
IIS Server: CLIENT20_torte1
SQL Server: SERV1
Database: tpcc
User: sa
Protocol: HTML
w_id Range: 1336 - 1424
w_id Min Warehouse: 1
w_id Max Warehouse: 9968
Scale: Normal
User Count: 890
District id: 1
Scale Down: No

Driver Engine: RTE02C
IIS Server: CLIENT20_torte1
SQL Server: SERV1
Database: tpcc
User: sa
Protocol: HTML
w_id Range: 1425 - 1513
w_id Min Warehouse: 1
w_id Max Warehouse: 9968
Scale: Normal
User Count: 890
District id: 1
Scale Down: No

Driver Engine: RTE02D
IIS Server: CLIENT20_torte1
SQL Server: SERV1
Database: tpcc
User: sa
Protocol: HTML
w_id Range: 1514 - 1602
w_id Min Warehouse: 1
w_id Max Warehouse: 9968
Scale: Normal
User Count: 890
District id: 1
Scale Down: No

Driver Engine: RTE02E
IIS Server: CLIENT20_torte1
SQL Server: SERV1
Database: tpcc
User: sa
Protocol: HTML
w_id Range: 1603 - 1691
w_id Min Warehouse: 1
w_id Max Warehouse: 9968
Scale: Normal
User Count: 890
District id: 1
Scale Down: No

Driver Engine: RTE02F
IIS Server: CLIENT10_torte4
SQL Server: SERV1
Database: tpcc
User: sa
Protocol: HTML
w_id Range: 1692 - 1780
w_id Min Warehouse: 1
w_id Max Warehouse: 9968
Scale: Normal
User Count: 890
District id: 1
Scale Down: No

Driver Engine: RTE02G
IIS Server: CLIENT10_torte4
SQL Server: SERV1
Database: tpcc
User: sa
Protocol: HTML
w_id Range: 1781 - 1869
w_id Min Warehouse: 1
w_id Max Warehouse: 9968
Scale: Normal
User Count: 890
District id: 1
Scale Down: No

Driver Engine: RTE02H
IIS Server: CLIENT20_torte2
SQL Server: SERV1
Database: tpcc
User: sa
Protocol: HTML
w_id Range: 1870 - 1958
w_id Min Warehouse: 1
w_id Max Warehouse: 9968
Scale: Normal
User Count: 890
District id: 1
Scale Down: No

Driver Engine: RTE02I
IIS Server: CLIENT20_torte2
SQL Server: SERV1
Database: tpcc
User: sa
Protocol: HTML
w_id Range: 1959 - 2047
w_id Min Warehouse: 1
w_id Max Warehouse: 9968
Scale: Normal
User Count: 890
District id: 1
Scale Down: No

Driver Engine: RTE02J
IIS Server: CLIENT20_torte2
SQL Server: SERV1
Database: tpcc
User: sa
Protocol: HTML
w_id Range: 2048 - 2136
w_id Min Warehouse: 1
w_id Max Warehouse: 9968
Scale: Normal
User Count: 890
District id: 1
Scale Down: No

Driver Engine: RTE02K
IIS Server: CLIENT20_torte2
SQL Server: SERV1
Database: tpcc
User: sa
Protocol: HTML
w_id Range: 2137 - 2225
w_id Min Warehouse: 1
w_id Max Warehouse: 9968
Scale: Normal
User Count: 890
District id: 1
Scale Down: No

Driver Engine: RTE02L
IIS Server: CLIENT20_torte2
SQL Server: SERV1
Database: tpcc
User: sa
Protocol: HTML
w_id Range: 2226 - 2314
w_id Min Warehouse: 1
w_id Max Warehouse: 9968
Scale: Normal
User Count: 890
District id: 1
Scale Down: No

Driver Engine: RTE02M
IIS Server: CLIENT10_torte4
SQL Server: SERV1
Database: tpcc
User: sa
Protocol: HTML
w_id Range: 2315 - 2403
w_id Min Warehouse: 1
w_id Max Warehouse: 9968

Scale: Normal
User Count: 890
District id: 1
Scale Down: No

Driver Engine: RTE02N
IIS Server: CLIENT10_torte4
SQL Server: SERV1
Database: tpcc
User: sa
Protocol: HTML
w_id Range: 2404 - 2492
w_id Min Warehouse: 1
w_id Max Warehouse: 9968
Scale: Normal
User Count: 890
District id: 1
Scale Down: No

Driver Engine: RTE03A
IIS Server: CLIENT30_torte1
SQL Server: SERV2
Database: tpcc
User: sa
Protocol: HTML
w_id Range: 2493 - 2581
w_id Min Warehouse: 1
w_id Max Warehouse: 9968
Scale: Normal
User Count: 890
District id: 1
Scale Down: No

Driver Engine: RTE03B
IIS Server: CLIENT30_torte1
SQL Server: SERV2
Database: tpcc
User: sa
Protocol: HTML
w_id Range: 2582 - 2670
w_id Min Warehouse: 1
w_id Max Warehouse: 9968
Scale: Normal
User Count: 890
District id: 1
Scale Down: No

Driver Engine: RTE03C
IIS Server: CLIENT30_torte1
SQL Server: SERV2
Database: tpcc
User: sa
Protocol: HTML
w_id Range: 2671 - 2759
w_id Min Warehouse: 1
w_id Max Warehouse: 9968
Scale: Normal
User Count: 890
District id: 1
Scale Down: No

Driver Engine: RTE03D
IIS Server: CLIENT30_torte1
SQL Server: SERV2
Database: tpcc
User: sa
Protocol: HTML
w_id Range: 2760 - 2848
w_id Min Warehouse: 1
w_id Max Warehouse: 9968
Scale: Normal
User Count: 890
District id: 1
Scale Down: No

Driver Engine: RTE03E
IIS Server: CLIENT30_torte1
SQL Server: SERV2
Database: tpcc
User: sa
Protocol: HTML
w_id Range: 2849 - 2937
w_id Min Warehouse: 1
w_id Max Warehouse: 9968
Scale: Normal
User Count: 890
District id: 1
Scale Down: No

Driver Engine: RTE03F
IIS Server: CLIENT30_torte3
SQL Server: SERV2
Database: tpcc
User: sa
Protocol: HTML
w_id Range: 2938 - 3026
w_id Min Warehouse: 1
w_id Max Warehouse: 9968
Scale: Normal
User Count: 890
District id: 1
Scale Down: No

Driver Engine: RTE03G
IIS Server: CLIENT30_torte3
SQL Server: SERV2
Database: tpcc
User: sa
Protocol: HTML
w_id Range: 3027 - 3115
w_id Min Warehouse: 1
w_id Max Warehouse: 9968
Scale: Normal
User Count: 890
District id: 1
Scale Down: No

Driver Engine: RTE03H
IIS Server: CLIENT30_torte2
SQL Server: SERV2
Database: tpcc
User: sa
Protocol: HTML
w_id Range: 3116 - 3204
w_id Min Warehouse: 1
w_id Max Warehouse: 9968
Scale: Normal
User Count: 890
District id: 1
Scale Down: No

Driver Engine: RTE03I
IIS Server: CLIENT30_torte2
SQL Server: SERV2
Database: tpcc
User: sa

Protocol: HTML
w_id Range: 3205 - 3293
w_id Min Warehouse: 1
w_id Max Warehouse: 9968
Scale: Normal
User Count: 890
District id: 1
Scale Down: No

Driver Engine: RTE03J
IIS Server: CLIENT30_torte2
SQL Server: SERV2
Database: tpcc
User: sa
Protocol: HTML
w_id Range: 3294 - 3382
w_id Min Warehouse: 1
w_id Max Warehouse: 9968
Scale: Normal
User Count: 890
District id: 1
Scale Down: No

Driver Engine: RTE03K
IIS Server: CLIENT30_torte2
SQL Server: SERV2
Database: tpcc
User: sa
Protocol: HTML
w_id Range: 3383 - 3471
w_id Min Warehouse: 1
w_id Max Warehouse: 9968
Scale: Normal
User Count: 890
District id: 1
Scale Down: No

Driver Engine: RTE03L
IIS Server: CLIENT30_torte2
SQL Server: SERV2
Database: tpcc
User: sa
Protocol: HTML
w_id Range: 3472 - 3560
w_id Min Warehouse: 1
w_id Max Warehouse: 9968
Scale: Normal
User Count: 890
District id: 1
Scale Down: No

Driver Engine: RTE03M
IIS Server: CLIENT30_torte3
SQL Server: SERV2
Database: tpcc
User: sa
Protocol: HTML
w_id Range: 3561 - 3649
w_id Min Warehouse: 1
w_id Max Warehouse: 9968
Scale: Normal
User Count: 890
District id: 1
Scale Down: No

Driver Engine: RTE03N
IIS Server: CLIENT30_torte3
SQL Server: SERV2
Database: tpcc
User: sa
Protocol: HTML
w_id Range: 3650 - 3738
w_id Min Warehouse: 1
w_id Max Warehouse: 9968
Scale: Normal
User Count: 890
District id: 1
Scale Down: No

Driver Engine: RTE04A
IIS Server: CLIENT40_torte1
SQL Server: SERV2
Database: tpcc
User: sa
Protocol: HTML
w_id Range: 3739 - 3827
w_id Min Warehouse: 1
w_id Max Warehouse: 9968
Scale: Normal
User Count: 890
District id: 1
Scale Down: No

Driver Engine: RTE04B
IIS Server: CLIENT40_torte1
SQL Server: SERV2
Database: tpcc
User: sa
Protocol: HTML
w_id Range: 3828 - 3916
w_id Min Warehouse: 1
w_id Max Warehouse: 9968
Scale: Normal
User Count: 890
District id: 1
Scale Down: No

Driver Engine: RTE04C
IIS Server: CLIENT40_torte1
SQL Server: SERV2
Database: tpcc
User: sa
Protocol: HTML
w_id Range: 3917 - 4005
w_id Min Warehouse: 1
w_id Max Warehouse: 9968
Scale: Normal
User Count: 890
District id: 1
Scale Down: No

Driver Engine: RTE04D
IIS Server: CLIENT40_torte1
SQL Server: SERV2
Database: tpcc
User: sa
Protocol: HTML
w_id Range: 4006 - 4094
w_id Min Warehouse: 1
w_id Max Warehouse: 9968
Scale: Normal
User Count: 890
District id: 1
Scale Down: No

Driver Engine: RTE04E

IIS Server: CLIENT40_torte1
SQL Server: SERV2
Database: tpcc
User: sa
Protocol: HTML
w_id Range: 4095 - 4183
w_id Min Warehouse: 1
w_id Max Warehouse: 9968
Scale: Normal
User Count: 890
District id: 1
Scale Down: No

Driver Engine: RTE04F
IIS Server: CLIENT30_torte4
SQL Server: SERV2
Database: tpcc
User: sa
Protocol: HTML
w_id Range: 4184 - 4272
w_id Min Warehouse: 1
w_id Max Warehouse: 9968
Scale: Normal
User Count: 890
District id: 1
Scale Down: No

Driver Engine: RTE04G
IIS Server: CLIENT30_torte4
SQL Server: SERV2
Database: tpcc
User: sa
Protocol: HTML
w_id Range: 4273 - 4361
w_id Min Warehouse: 1
w_id Max Warehouse: 9968
Scale: Normal
User Count: 890
District id: 1
Scale Down: No

Driver Engine: RTE04H
IIS Server: CLIENT40_torte2
SQL Server: SERV2
Database: tpcc
User: sa
Protocol: HTML
w_id Range: 4362 - 4450
w_id Min Warehouse: 1
w_id Max Warehouse: 9968
Scale: Normal
User Count: 890
District id: 1
Scale Down: No

Driver Engine: RTE04I
IIS Server: CLIENT40_torte2
SQL Server: SERV2
Database: tpcc
User: sa
Protocol: HTML
w_id Range: 4451 - 4539
w_id Min Warehouse: 1
w_id Max Warehouse: 9968
Scale: Normal
User Count: 890
District id: 1
Scale Down: No

Driver Engine: RTE04J
IIS Server: CLIENT40_torte2
SQL Server: SERV2
Database: tpcc
User: sa
Protocol: HTML
w_id Range: 4540 - 4628
w_id Min Warehouse: 1
w_id Max Warehouse: 9968
Scale: Normal
User Count: 890
District id: 1
Scale Down: No

Driver Engine: RTE04K
IIS Server: CLIENT40_torte2
SQL Server: SERV2
Database: tpcc
User: sa
Protocol: HTML
w_id Range: 4629 - 4717
w_id Min Warehouse: 1
w_id Max Warehouse: 9968
Scale: Normal
User Count: 890
District id: 1
Scale Down: No

Driver Engine: RTE04L
IIS Server: CLIENT40_torte2
SQL Server: SERV2
Database: tpcc
User: sa
Protocol: HTML
w_id Range: 4718 - 4806
w_id Min Warehouse: 1
w_id Max Warehouse: 9968
Scale: Normal
User Count: 890
District id: 1
Scale Down: No

Driver Engine: RTE04M
IIS Server: CLIENT30_torte4
SQL Server: SERV2
Database: tpcc
User: sa
Protocol: HTML
w_id Range: 4807 - 4895
w_id Min Warehouse: 1
w_id Max Warehouse: 9968
Scale: Normal
User Count: 890
District id: 1
Scale Down: No

Driver Engine: RTE04N
IIS Server: CLIENT30_torte4
SQL Server: SERV2
Database: tpcc
User: sa
Protocol: HTML
w_id Range: 4896 - 4984
w_id Min Warehouse: 1
w_id Max Warehouse: 9968
Scale: Normal
User Count: 890

District id: 1
Scale Down: No

Driver Engine: RTE05A
IIS Server: CLIENT50_torte1
SQL Server: SERV3
Database: tpcc
User: sa
Protocol: HTML
w_id Range: 4985 - 5073
w_id Min Warehouse: 1
w_id Max Warehouse: 9968
Scale: Normal
User Count: 890
District id: 1
Scale Down: No

Driver Engine: RTE05B
IIS Server: CLIENT50_torte1
SQL Server: SERV3
Database: tpcc
User: sa
Protocol: HTML
w_id Range: 5074 - 5162
w_id Min Warehouse: 1
w_id Max Warehouse: 9968
Scale: Normal
User Count: 890
District id: 1
Scale Down: No

Driver Engine: RTE05C
IIS Server: CLIENT50_torte1
SQL Server: SERV3
Database: tpcc
User: sa
Protocol: HTML
w_id Range: 5163 - 5251
w_id Min Warehouse: 1
w_id Max Warehouse: 9968
Scale: Normal
User Count: 890
District id: 1
Scale Down: No

Driver Engine: RTE05D
IIS Server: CLIENT50_torte1
SQL Server: SERV3
Database: tpcc
User: sa
Protocol: HTML
w_id Range: 5252 - 5340
w_id Min Warehouse: 1
w_id Max Warehouse: 9968
Scale: Normal
User Count: 890
District id: 1
Scale Down: No

Driver Engine: RTE05E
IIS Server: CLIENT50_torte1
SQL Server: SERV3
Database: tpcc
User: sa
Protocol: HTML
w_id Range: 5341 - 5429
w_id Min Warehouse: 1
w_id Max Warehouse: 9968
Scale: Normal
User Count: 890
District id: 1
Scale Down: No

Driver Engine: RTE05F
IIS Server: CLIENT50_torte3
SQL Server: SERV3
Database: tpcc
User: sa
Protocol: HTML
w_id Range: 5430 - 5518
w_id Min Warehouse: 1
w_id Max Warehouse: 9968
Scale: Normal
User Count: 890
District id: 1
Scale Down: No

Driver Engine: RTE05G
IIS Server: CLIENT50_torte3
SQL Server: SERV3
Database: tpcc
User: sa
Protocol: HTML
w_id Range: 5519 - 5607
w_id Min Warehouse: 1
w_id Max Warehouse: 9968
Scale: Normal
User Count: 890
District id: 1
Scale Down: No

Driver Engine: RTE05H
IIS Server: CLIENT50_torte2
SQL Server: SERV3
Database: tpcc
User: sa
Protocol: HTML
w_id Range: 5608 - 5696
w_id Min Warehouse: 1
w_id Max Warehouse: 9968
Scale: Normal
User Count: 890
District id: 1
Scale Down: No

Driver Engine: RTE05I
IIS Server: CLIENT50_torte2
SQL Server: SERV3
Database: tpcc
User: sa
Protocol: HTML
w_id Range: 5697 - 5785
w_id Min Warehouse: 1
w_id Max Warehouse: 9968
Scale: Normal
User Count: 890
District id: 1
Scale Down: No

Driver Engine: RTE05J
IIS Server: CLIENT50_torte2
SQL Server: SERV3
Database: tpcc
User: sa
Protocol: HTML
w_id Range: 5786 - 5874

w_id Min Warehouse: 1
w_id Max Warehouse: 9968
Scale: Normal
User Count: 890
District id: 1
Scale Down: No

Driver Engine: RTE05K
IIS Server: CLIENT50_torte2
SQL Server: SERV3
Database: tpcc
User: sa
Protocol: HTML
w_id Range: 5875 - 5963
w_id Min Warehouse: 1
w_id Max Warehouse: 9968
Scale: Normal
User Count: 890
District id: 1
Scale Down: No

Driver Engine: RTE05L
IIS Server: CLIENT50_torte2
SQL Server: SERV3
Database: tpcc
User: sa
Protocol: HTML
w_id Range: 5964 - 6052
w_id Min Warehouse: 1
w_id Max Warehouse: 9968
Scale: Normal
User Count: 890
District id: 1
Scale Down: No

Driver Engine: RTE05M
IIS Server: CLIENT50_torte3
SQL Server: SERV3
Database: tpcc
User: sa
Protocol: HTML
w_id Range: 6053 - 6141
w_id Min Warehouse: 1
w_id Max Warehouse: 9968
Scale: Normal
User Count: 890
District id: 1
Scale Down: No

Driver Engine: RTE05N
IIS Server: CLIENT50_torte3
SQL Server: SERV3
Database: tpcc
User: sa
Protocol: HTML
w_id Range: 6142 - 6230
w_id Min Warehouse: 1
w_id Max Warehouse: 9968
Scale: Normal
User Count: 890
District id: 1
Scale Down: No

Driver Engine: RTE06A
IIS Server: CLIENT60_torte1
SQL Server: SERV3
Database: tpcc
User: sa
Protocol: HTML
w_id Range: 6231 - 6319
w_id Min Warehouse: 1
w_id Max Warehouse: 9968
Scale: Normal
User Count: 890
District id: 1
Scale Down: No

Driver Engine: RTE06B
IIS Server: CLIENT60_torte1
SQL Server: SERV3
Database: tpcc
User: sa
Protocol: HTML
w_id Range: 6320 - 6408
w_id Min Warehouse: 1
w_id Max Warehouse: 9968
Scale: Normal
User Count: 890
District id: 1
Scale Down: No

Driver Engine: RTE06C
IIS Server: CLIENT60_torte1
SQL Server: SERV3
Database: tpcc
User: sa
Protocol: HTML
w_id Range: 6409 - 6497
w_id Min Warehouse: 1
w_id Max Warehouse: 9968
Scale: Normal
User Count: 890
District id: 1
Scale Down: No

Driver Engine: RTE06D
IIS Server: CLIENT60_torte1
SQL Server: SERV3
Database: tpcc
User: sa
Protocol: HTML
w_id Range: 6498 - 6586
w_id Min Warehouse: 1
w_id Max Warehouse: 9968
Scale: Normal
User Count: 890
District id: 1
Scale Down: No

Driver Engine: RTE06E
IIS Server: CLIENT60_torte1
SQL Server: SERV3
Database: tpcc
User: sa
Protocol: HTML
w_id Range: 6587 - 6675
w_id Min Warehouse: 1
w_id Max Warehouse: 9968
Scale: Normal
User Count: 890
District id: 1
Scale Down: No

Driver Engine: RTE06F
IIS Server: CLIENT50_torte4
SQL Server: SERV3

Database: tpcc
User: sa
Protocol: HTML
w_id Range: 6676 - 6764
w_id Min Warehouse: 1
w_id Max Warehouse: 9968
Scale: Normal
User Count: 890
District id: 1
Scale Down: No

Driver Engine: RTE06G
IIS Server: CLIENT50_torte4
SQL Server: SERV3
Database: tpcc
User: sa
Protocol: HTML
w_id Range: 6765 - 6853
w_id Min Warehouse: 1
w_id Max Warehouse: 9968
Scale: Normal
User Count: 890
District id: 1
Scale Down: No

Driver Engine: RTE06H
IIS Server: CLIENT60_torte2
SQL Server: SERV3
Database: tpcc
User: sa
Protocol: HTML
w_id Range: 6854 - 6942
w_id Min Warehouse: 1
w_id Max Warehouse: 9968
Scale: Normal
User Count: 890
District id: 1
Scale Down: No

Driver Engine: RTE06I
IIS Server: CLIENT60_torte2
SQL Server: SERV3
Database: tpcc
User: sa
Protocol: HTML
w_id Range: 6943 - 7031
w_id Min Warehouse: 1
w_id Max Warehouse: 9968
Scale: Normal
User Count: 890
District id: 1
Scale Down: No

Driver Engine: RTE06J
IIS Server: CLIENT60_torte2
SQL Server: SERV3
Database: tpcc
User: sa
Protocol: HTML
w_id Range: 7032 - 7120
w_id Min Warehouse: 1
w_id Max Warehouse: 9968
Scale: Normal
User Count: 890
District id: 1
Scale Down: No

Driver Engine: RTE06K
IIS Server: CLIENT60_torte2
SQL Server: SERV3
Database: tpcc
User: sa
Protocol: HTML
w_id Range: 7121 - 7209
w_id Min Warehouse: 1
w_id Max Warehouse: 9968
Scale: Normal
User Count: 890
District id: 1
Scale Down: No

Driver Engine: RTE06L
IIS Server: CLIENT60_torte2
SQL Server: SERV3
Database: tpcc
User: sa
Protocol: HTML
w_id Range: 7210 - 7298
w_id Min Warehouse: 1
w_id Max Warehouse: 9968
Scale: Normal
User Count: 890
District id: 1
Scale Down: No

Driver Engine: RTE06M
IIS Server: CLIENT50_torte4
SQL Server: SERV3
Database: tpcc
User: sa
Protocol: HTML
w_id Range: 7299 - 7387
w_id Min Warehouse: 1
w_id Max Warehouse: 9968
Scale: Normal
User Count: 890
District id: 1
Scale Down: No

Driver Engine: RTE06N
IIS Server: CLIENT50_torte4
SQL Server: SERV3
Database: tpcc
User: sa
Protocol: HTML
w_id Range: 7388 - 7476
w_id Min Warehouse: 1
w_id Max Warehouse: 9968
Scale: Normal
User Count: 890
District id: 1
Scale Down: No

Driver Engine: RTE07A
IIS Server: CLIENT70_torte1
SQL Server: SERV4
Database: tpcc
User: sa
Protocol: HTML
w_id Range: 7477 - 7565
w_id Min Warehouse: 1
w_id Max Warehouse: 9968
Scale: Normal
User Count: 890
District id: 1
Scale Down: No

Driver Engine: RTE07B
IIS Server: CLIENT70_torte1
SQL Server: SERV4
Database: tpcc
User: sa
Protocol: HTML
w_id Range: 7566 - 7654
w_id Min Warehouse: 1
w_id Max Warehouse: 9968
Scale: Normal
User Count: 890
District id: 1
Scale Down: No

Driver Engine: RTE07C
IIS Server: CLIENT70_torte1
SQL Server: SERV4
Database: tpcc
User: sa
Protocol: HTML
w_id Range: 7655 - 7743
w_id Min Warehouse: 1
w_id Max Warehouse: 9968
Scale: Normal
User Count: 890
District id: 1
Scale Down: No

Driver Engine: RTE07D
IIS Server: CLIENT70_torte1
SQL Server: SERV4
Database: tpcc
User: sa
Protocol: HTML
w_id Range: 7744 - 7832
w_id Min Warehouse: 1
w_id Max Warehouse: 9968
Scale: Normal
User Count: 890
District id: 1
Scale Down: No

Driver Engine: RTE07E
IIS Server: CLIENT70_torte1
SQL Server: SERV4
Database: tpcc
User: sa
Protocol: HTML
w_id Range: 7833 - 7921
w_id Min Warehouse: 1
w_id Max Warehouse: 9968
Scale: Normal
User Count: 890
District id: 1
Scale Down: No

Driver Engine: RTE07F
IIS Server: CLIENT70_torte3
SQL Server: SERV4
Database: tpcc
User: sa
Protocol: HTML
w_id Range: 7922 - 8010
w_id Min Warehouse: 1
w_id Max Warehouse: 9968
Scale: Normal
User Count: 890
District id: 1
Scale Down: No

Driver Engine: RTE07G
IIS Server: CLIENT70_torte3
SQL Server: SERV4
Database: tpcc
User: sa
Protocol: HTML
w_id Range: 8011 - 8099
w_id Min Warehouse: 1
w_id Max Warehouse: 9968
Scale: Normal
User Count: 890
District id: 1
Scale Down: No

Driver Engine: RTE07H
IIS Server: CLIENT70_torte2
SQL Server: SERV4
Database: tpcc
User: sa
Protocol: HTML
w_id Range: 8100 - 8188
w_id Min Warehouse: 1
w_id Max Warehouse: 9968
Scale: Normal
User Count: 890
District id: 1
Scale Down: No

Driver Engine: RTE07I
IIS Server: CLIENT70_torte2
SQL Server: SERV4
Database: tpcc
User: sa
Protocol: HTML
w_id Range: 8189 - 8277
w_id Min Warehouse: 1
w_id Max Warehouse: 9968
Scale: Normal
User Count: 890
District id: 1
Scale Down: No

Driver Engine: RTE07J
IIS Server: CLIENT70_torte2
SQL Server: SERV4
Database: tpcc
User: sa
Protocol: HTML
w_id Range: 8278 - 8366
w_id Min Warehouse: 1
w_id Max Warehouse: 9968
Scale: Normal
User Count: 890
District id: 1
Scale Down: No

Driver Engine: RTE07K
IIS Server: CLIENT70_torte2
SQL Server: SERV4
Database: tpcc
User: sa
Protocol: HTML
w_id Range: 8367 - 8455
w_id Min Warehouse: 1
w_id Max Warehouse: 9968

Scale: Normal
User Count: 890
District id: 1
Scale Down: No

Driver Engine: RTE07L
IIS Server: CLIENT70_torte2
SQL Server: SERV4
Database: tpcc
User: sa
Protocol: HTML
w_id Range: 8456 - 8544
w_id Min Warehouse: 1
w_id Max Warehouse: 9968
Scale: Normal
User Count: 890
District id: 1
Scale Down: No

Driver Engine: RTE07M
IIS Server: CLIENT70_torte3
SQL Server: SERV4
Database: tpcc
User: sa
Protocol: HTML
w_id Range: 8545 - 8633
w_id Min Warehouse: 1
w_id Max Warehouse: 9968
Scale: Normal
User Count: 890
District id: 1
Scale Down: No

Driver Engine: RTE07N
IIS Server: CLIENT70_torte3
SQL Server: SERV4
Database: tpcc
User: sa
Protocol: HTML
w_id Range: 8634 - 8722
w_id Min Warehouse: 1
w_id Max Warehouse: 9968
Scale: Normal
User Count: 890
District id: 1
Scale Down: No

Driver Engine: RTE08A
IIS Server: CLIENT80_torte1
SQL Server: SERV4
Database: tpcc
User: sa
Protocol: HTML
w_id Range: 8723 - 8811
w_id Min Warehouse: 1
w_id Max Warehouse: 9968
Scale: Normal
User Count: 890
District id: 1
Scale Down: No

Driver Engine: RTE08B
IIS Server: CLIENT80_torte1
SQL Server: SERV4
Database: tpcc
User: sa
Protocol: HTML
w_id Range: 8812 - 8900
w_id Min Warehouse: 1
w_id Max Warehouse: 9968
Scale: Normal
User Count: 890
District id: 1
Scale Down: No

Driver Engine: RTE08C
IIS Server: CLIENT80_torte1
SQL Server: SERV4
Database: tpcc
User: sa
Protocol: HTML
w_id Range: 8901 - 8989
w_id Min Warehouse: 1
w_id Max Warehouse: 9968
Scale: Normal
User Count: 890
District id: 1
Scale Down: No

Driver Engine: RTE08D
IIS Server: CLIENT80_torte1
SQL Server: SERV4
Database: tpcc
User: sa
Protocol: HTML
w_id Range: 8990 - 9078
w_id Min Warehouse: 1
w_id Max Warehouse: 9968
Scale: Normal
User Count: 890
District id: 1
Scale Down: No

Driver Engine: RTE08E
IIS Server: CLIENT80_torte1
SQL Server: SERV4
Database: tpcc
User: sa
Protocol: HTML
w_id Range: 9079 - 9167
w_id Min Warehouse: 1
w_id Max Warehouse: 9968
Scale: Normal
User Count: 890
District id: 1
Scale Down: No

Driver Engine: RTE08F
IIS Server: CLIENT70_torte4
SQL Server: SERV4
Database: tpcc
User: sa
Protocol: HTML
w_id Range: 9168 - 9256
w_id Min Warehouse: 1
w_id Max Warehouse: 9968
Scale: Normal
User Count: 890
District id: 1
Scale Down: No

Driver Engine: RTE08G
IIS Server: CLIENT70_torte4
SQL Server: SERV4
Database: tpcc
User: sa

Protocol: HTML
w_id Range: 9257 - 9345
w_id Min Warehouse: 1
w_id Max Warehouse: 9968
Scale: Normal
User Count: 890
District id: 1
Scale Down: No

Driver Engine: RTE08H
IIS Server: CLIENT80_torte2
SQL Server: SERV4
Database: tpcc
User: sa
Protocol: HTML
w_id Range: 9346 - 9434
w_id Min Warehouse: 1
w_id Max Warehouse: 9968
Scale: Normal
User Count: 890
District id: 1
Scale Down: No

Driver Engine: RTE08I
IIS Server: CLIENT80_torte2
SQL Server: SERV4
Database: tpcc
User: sa
Protocol: HTML
w_id Range: 9435 - 9523
w_id Min Warehouse: 1
w_id Max Warehouse: 9968
Scale: Normal
User Count: 890
District id: 1
Scale Down: No

Driver Engine: RTE08J
IIS Server: CLIENT80_torte2
SQL Server: SERV4
Database: tpcc
User: sa
Protocol: HTML
w_id Range: 9524 - 9612
w_id Min Warehouse: 1
w_id Max Warehouse: 9968
Scale: Normal
User Count: 890
District id: 1
Scale Down: No

Driver Engine: RTE08K
IIS Server: CLIENT80_torte2
SQL Server: SERV4
Database: tpcc
User: sa
Protocol: HTML
w_id Range: 9613 - 9701
w_id Min Warehouse: 1
w_id Max Warehouse: 9968
Scale: Normal
User Count: 890
District id: 1
Scale Down: No

Driver Engine: RTE08L
IIS Server: CLIENT80_torte2
SQL Server: SERV4
Database: tpcc
User: sa
Protocol: HTML
w_id Range: 9702 - 9790
w_id Min Warehouse: 1
w_id Max Warehouse: 9968
Scale: Normal
User Count: 890
District id: 1
Scale Down: No

Driver Engine: RTE08M
IIS Server: CLIENT70_torte4
SQL Server: SERV4
Database: tpcc
User: sa
Protocol: HTML
w_id Range: 9791 - 9879
w_id Min Warehouse: 1
w_id Max Warehouse: 9968
Scale: Normal
User Count: 890
District id: 1
Scale Down: No

Driver Engine: RTE08N
IIS Server: CLIENT70_torte4
SQL Server: SERV4
Database: tpcc
User: sa
Protocol: HTML
w_id Range: 9880 - 9968
w_id Min Warehouse: 1
w_id Max Warehouse: 9968
Scale: Normal
User Count: 890
District id: 1
Scale Down: No

Number of Parameter Sets: 2

~Default
Default Parameter Set

	Txn Weight	Think Time	Key Time	RT Delay	RT Fence	Menu Delay
New Order	10.00		12.05			18.01
		0.10	5.00	0.10		
Payment	10.00	12.05	3.01			0.10
		5.00	0.10			
Delivery	1.00	5.05	2.01			0.10
		5.00	0.10			
Stock Level	1.00	5.05	2.01			0.10
		20.00	0.10			
Order Status	1.00	10.05	2.01			0.10
		5.00	0.10			

PARAM2
Editable Default Parameter Set

	Txn Weight	Think Time	Key Time	RT Delay	RT Fence	Menu Delay
New Order	44.80		12.05			18.01
		0.10	5.00	0.10		

		Payment	43.05	12.05	3.01
0.10	5.00	0.10			
		Delivery	4.05	5.05	2.01
0.10	5.00	0.10			
		Stock Level	4.05	5.05	2.01
0.10	20.00	0.10			
		Order Status	4.05	10.05	2.01
0.10	5.00	0.10			

Appendix D: 60-Day Space

TPC-C 60-Day Space Requirements						
Warehouses	**9,968**	**tpmC**	**121,319.23**	**tpmC/W**	**12.17**	
Numbers are shown in Kbytes unless otherwise specified.						
Table	**Rows**	**Data**	**Index**	**5% Space**	**8H Space**	**Total Space**
Warehouse	**9,968**	**1,088**	**208**	**64.80**		**1,360.80**
District	**99,680**	**11,232**	**224**	**572.80**		**12,028.80**
Item	**100,000**	**38,112**	**288**	**1,920.00**		**40,320.00**
New-Order	**89,712,000**	**1,598,464**	**4,192**		**797,440.00**	**2,400,096.00**
History	**299,040,000**	**17,853,152**	**58,400**		**3,487,986.67**	**21,399,538.67**
Orders	**299,040,000**	**9,764,576**	**3,578,584**		**2,598,365.81**	**15,941,525.81**
Customer	**299,040,000**	**217,483,648**	**13,572,552**	**11,552,810.00**		**242,609,010.00**
Order-Line	**2,990,389,741**	**199,359,328**	**471,936**		**38,913,924.68**	**238,745,188.68**
Stock	**996,800,000**	**318,976,008**	**675,584**	**15,982,579.60**		**335,634,171.60**
Totals		**765,085,608**	**18,361,968**	**27,537,947.20**	**45,797,717.16**	**856,783,240**
Segment	**LogDev Cnt.**	**Segment Size**	**Needed**	**Overhead**		**Not Needed**
misc	**24**	**294,912,000**	**278,540,059**	**2,785,401**		**13,586,540.65**
big	**24**	**584,908,800**	**578,243,182**	**5,782,432**		**883,186.58**
master, msdb,model	**4**	**53,248**	**53,248**			**0.00**
tpcc_root	**4**	**32,768**	**32,768**			**0.00**
tempdb	**4**	**34,816**	**34,816**			**0.00**
Totals		**879,941,632**	**856,904,072**	**8,567,832**		**14,469,727.23**
Dynamic Space	**226,977,056.00**	**Sum of Data for Order, Order-Line and History**				
Static Space	**592,576,299.60**	**Data + Index + 5% Space + Overhead - Dynamic Space**				
Free Space	**45,918,549.16**	**Total Segment Size - Dynamic Space - Static Space - Not needed**				
Daily Growth	**44,200,131.08**	**(Dynamic Space/Wc * 62.5)* tpmC**				
Daily Spread	**(20,381,647.45)**	**Free Space - 1.5 * Daily Growth (Zero If Negative)**				
60-Day Space (KB)	**3,244,584,164.28**	**Static Space + 60 (Daily Growth + Daily Spread)**				
60-Day Space (GB)	**3,094.28**	**60-Day Space in GB (Excludes OS,Paging and RDBMS Logs)**				
Available (GB)	**8,542.80**	**Total storage configured and available for database, minus logs, in a RAID-0 configuration**				
Log File Storage Requirements						
Log Used (KB)	**28,871,557.00**	**Log File Storage Used in a Measured Run**				
% Log Used	**8.81**	**% Log File Storage Used During Entire Run**				
Total N-O Txn	**5,593,990.00**	**Total Count of New-Order Transactions Completed during Entire Run**				
Log per N-O Txn	**5.16**	**KB of Log Storage Used per New-Order Transaction**				
8 Hour Log (GB)	**286.63**	**8-Hours of Log in GB (excluding space for redundancy)**				
Log Configured (GB)	**312.50**	**78.125GB per Node (RAID-10)**				
Disk Capacity	**MB**	**GB**				
9.1GB 10K rpm	**8,678**	**8.48**				
18.2GB 10K rpm	**17,356**	**16.95**				
Space Usage	**GB Needed**	**Disks Priced**		**GB Priced**	**GB Usable**	**TB Usable**
60-Day (RAID-0)	**3,094.28**	**560**	**9.1GB 15K rpm**	**4,746.00**	**4,746.00**	
		112	**18.2GB 15K rpm**	**1,898.40**	**1,898.40**	
Total DB		**672**		**6,644.40**	**6,644.40**	
8hr Log (RAID-1)	**286.63**	**48**	**18.2GB 15K rpm**	**406.80**	**406.80**	
OS, SQL (RAID-1)	**256.00**	**8**	**9.1GB 10K rpm**	**67.80**	**33.90**	
Total Space	**3,636.91**	**728**		**7,119.00**	**7,085.10**	**8.77**

Appendix E: Third-Party Quotations

Microsoft Corporation
One Microsoft Way
Redmond, WA 98052-6399

Tel 425 882 8080
Fax 425 936 7329
http://www.microsoft.com/

Microsoft

March 15, 2001

IBM
Tricia Thomas
D23U/B060/Office E127
3039 Cornwallis Road
Research Triangle Park, NC
27709

Tricia:

Here is the information you requested regarding pricing for several Microsoft products to be used in conjunction with your TPC-C V5.0 benchmark testing.

All pricing shown is in US Dollars ($).

Part Number	Description	Unit Price	Quantity	Price
810-00846	**SQL Server 2000 Enterprise Edition** *Per processor licensing* *Discount schedule: Open Program Level C*	$ 16,541	32	$ 529,312
C11-00821	**Windows 2000 Server** *Server license only - No CALs* *Discount schedule: Open Program - No Level*	$ 738	1	$ 738
048-00317	**Visual C++ Professional 6.0 Win32**	$ 549	1	$ 549
	3-year maintenance for above software	$ 2,095	1	$ 25,140

All products are currently orderable through Microsoft's normal distribution channels.

This quote is valid for the next 90 days.

If we can be of any further assistance, please contact Jamie Reding at (425) 703-0510 or jamiere@microsoft.com.

Quote

Giganet, Inc.
580 Main Street
Bolton, MA 01740
(978) 779-7200
(978) 7797-203 Fax

Quote No.: 000000-00
Date: March 1, 2001

Ship to: IBM Corp.
Bill to: Chris King
3039 Corwallis Road
Dept. 23UA Bldg. 060/D133
Research Triangle Park, NC 27709

F.O.B.	Terms
Bolton, MA	Net 30

Qty	Part Number/ Description	Unit Price	Ext. Price
6	cLAN-1000 Giganet Host Adapter Card	$795.00	$4,770.00
6	cLAN-A1011 10 Meter Copper Cable	$135.00	$810.00
3	cLAN5000 8 port Cluster Switch	$6,250.00	$18,750.00
	5-Year Maintenance Price (7x24x4) 3-Year Maintenance Price (7x24x4)	$15,000.00 $15,000.00	$75,000.00 $45,000.00
	Hardware TOTAL		**$24,330.00**
	Actual shipping charges will be billed		

Prices are valid for 90 days from the date of this quote.

If you have any questions regarding this quote, please contact the GigaNet Sales Department at (978) 779-7400.

Software House International
2880 Zanker Blvd. #103
San Jose, CA 95134
Matthew Martin
National Account Executive
1-800-766-6357

Description	Part Number	Unit Price	Qty	Extended Price
8-Port 10/100Mbps Hub Nway Fast Ethernet Switch	NX-DSS8	25	4	$100

Prices are valid for 90 days from March 16, 2001.